4-12-85
Vol. 50 No. 71
Pages 14363-14699

federal register

Friday
April 12, 1985

Selected Subjects

CONTINUED INSIDE

FEDERAL REGISTER Published daily, Monday through Friday, (not published on Saturdays, Sundays, or on official holidays), by the Office of the Federal Register, National Archives and Records Administration, Washington, DC 20408, under the Federal Register Act (49 Stat. 500, as amended; 44 U.S.C. Ch. 15) and the regulations of the Administrative Committee of the Federal Register (1 CFR Ch. I). Distribution is made only by the Superintendent of Documents, U.S. Government Printing Office, Washington, DC 20402.

The **Federal Register** provides a uniform system for making available to the public regulations and legal notices issued by Federal agencies. These include Presidential proclamations and Executive Orders and Federal agency documents having general applicability and legal effect, documents required to be published by act of Congress and other Federal agency documents of public interest. Documents are on file for public inspection in the Office of the Federal Register the day before they are published, unless earlier filing is requested by the issuing agency.

The **Federal Register** will be furnished by mail to subscribers for $300.00 per year, or $150.00 for 6 months, payable in advance. The charge for individual copies is $1.50 for each issue, or $1.50 for each group of pages as actually bound. Remit check or money order, made payable to the Superintendent of Documents, U.S. Government Printing Office, Washington, DC 20402.

Questions and requests for specific information may be directed to the telephone numbers listed under INFORMATION AND ASSISTANCE in the READER AIDS section of this issue.

How To Cite This Publication: Use the volume number and the page number. Example: 50 FR 12345.

Selected Subjects

Contents

Federal Register
Vol. 50, No. 71
Friday, April 12, 1985

Separate Parts in This Issue

Reader Aids

Additional information, including a list of public laws, telephone numbers, and finding aids, appears in the Reader Aids section at the end of this issue.

CFR PARTS AFFECTED IN THIS ISSUE

A cumulative list of the parts affected this month can be found in the Reader Aids section at the end of this issue.

Federal Register
Vol. 50, No. 71
Friday, April 12, 1985

Presidential Documents

Title 3—

The President

Presidential Determination No. 85-9 of March 29, 1985

Military Assistance for El Salvador

Memorandum for the Secretary of State

By virtue of the authority vested in me by section 614(a)(1) of the Foreign Assistance Act of 1961, as amended (the Act), I hereby:

(1) determine that the furnishing of up to an additional $10 million for El Salvador under Chapter 2 of Part II of the Act, without regard to the limitations and restrictions on such assistance contained in P.L. 98-396, is important to the security interests of the United States; and

(2) authorize the furnishing of such assistance.

Such assistance shall be in addition to amounts otherwise available for El Salvador.

You are requested to report this determination to the Congress immediately, and none of the assistance provided for herein shall be furnished until after such report has been made.

This determination shall be published in the **Federal Register.**

Ronald Reagan

THE WHITE HOUSE,
Washington, March 29, 1985.

cc: The Secretary of Defense

[FR Doc. 85-9010
Filed 4-10-85; 4:02 pm]
Billing code 3195-01-M

Rules and Regulations

Federal Register
Vol. 50, No. 71
Friday, April 12, 1985

DEPARTMENT OF AGRICULTURE

Agricultural Marketing Service

7 CFR Part 54

Regulations for Federal Meat Grading and Certification Services; Product Control Authority

AGENCY: Agricultural Marketing Service, USDA.

ACTION: Final rule.

SUMMARY: This final rule amends the regulations governing the grading and certification of meat and meat products (7 CFR Part 54) by granting official graders and their supervisors the authority to control the movement and use of meat and meat products which do not comply with the regulations or that need to be held pending the results of an examination.

EFFECTIVE DATE: May 13, 1985.

FOR FURTHER INFORMATION CONTACT: Eugene M. Martin, Chief, Meat Grading and Certification Branch, Livestock Division, Agricultural Marketing Service, USDA; 14th Street and Independence Avenue, SW., Room 2638-S; Washington, D.C. 20250. (Telephone 202/382-1113.)

SUPPLEMENTARY INFORMATION:

Regulatory Impact Analysis

This action was reviewed under USDA procedures established to implement Executive Order 12291 and was classified as a nonmajor rule pursuant to sections 1(b) (1), (2), and (3) of that Order because (1) it would not have an annual effect on the economy of $100 million or more; (2) it would not result in a major increase in costs or prices for consumers, individual industries, Federal, State, or local government agencies, or geographic regions; and (3) it would not have significant adverse effects on competition, employment, investment, productivity, innovation, or on the ability of U.S. based enterprises to compete with foreign based enterprises in domestic or export markets. Accordingly, a regulatory impact analysis is not required.

The requirements of the Regulatory Flexibility Act (Pub. L. 96-354, 5 U.S.C. 601 *et seq.*) which deals with the impact of regulations on small entities were also satisfied in that William T. Manley, Deputy Administrator, Agricultural Marketing Service, certified that this rule will not have a significant impact on a substantial number of small entities. The final rule grants authority to official graders and their supervisors to control the movement and use of meat and meat products which do not comply with the regulations (7 CFR Part 54) or that need to be held pending the results of an examination. On a nationwide basis, the final rule will not measurably affect the average cost-per-unit graded and/or certified currently borne by all entities using the services. Consequently, the final rule will not significantly affect meatpackers, meat processors, consumers or any other small entity, and will not affect normal competition in the marketplace.

Background

The Agricultural Marketing Act (AMA) of 1946, as amended, 7 U.S.C. 1621 *et seq.*, authorizes the Secretary of Agriculture to provide voluntary Federal meat grading and certification services to facilitate the orderly marketing of meat and meat products and to enable consumers to obtain the quality of meat which they desire. In this regard, official graders and their supervisors, as authorized in 7 CFR Part 54, grade and certify approximately 14 billion pounds of meat and meat products each year.

During the grading and certification processes, official graders and their supervisors control meat and meat products which comply with applicable regulations to maintain the integrity of officially graded and certified products. Certified meat and meat products and graded meats are controlled by applying official identification marks, sealing meat product containers, continuous supervision, or a combination of these methods. However, meat and meat products which do not comply with applicable regulations or those meat and meat products held pending the results of an examination cannot be controlled adequately by official graders or their supervisors under current regulations. In certain cases, such meat and meat products may be incorrectly labeled or processed into certified product. The amendment of the regulation to grant official graders and their supervisors the authority to control adequately such meat and meat products consists primarily of describing and designating an official identification device and explaining its use in 7 CFR Part 54. In actual use, official graders and their supervisors would attach the identification device to meat and meat products or product containers not complying with the regulations or that need to be held pending further examination. Attaching the official identification device identifies the meat and meat products or product containers as being controlled under the authority of the AMA. Consequently, any meat or meat product so identified could not be used, moved, or altered in any manner without the express permission of an authorized USDA representative. The unauthorized removal or alteration of the official identification device or the identified meat or meat product would be a violation of the AMA and regulations issued thereunder. The amendment would facilitate the effective control of noncomplying meat or meat products or those held pending the results of an examination.

The proposal to revise the meat grading and certification regulations (7 CFR Part 54) to grant authority to official graders and their supervisors for control of meat and meat products which do not comply with applicable regulations or those meat and meat products held pending the results of an examination was published in the **Federal Register** on November 9, 1984 (Volume 49, No. 219, pages 44758-44760). Comments on the proposal were invited for 60 days ending on January 8, 1985. The need for the revision of the meat grading and certification regulations (7 CFR Part 54) and the justification of the proposed changes were detailed in the proposal.

Summary of Comments

During the comment period, a total of three comments were received. The distribution of these comments was as follows: national trade organizations—2 and meatpacking companies—1. Two of the three comments supported the

proposal with recommendations for minor modifications. One comment expressed opposition to the proposal on the grounds that the authority to control meat and meat products not in compliance with applicable regulations or held pending the results of an examination was unnecessary and would place undue burden on the meat industry. Each area raised by these comments is dealt with below.

The two supporting comments recommended a total of three modifications to the proposal. The first recommended modification was to limit the use of Agricultural Marketing Service (AMS) product control authority to meat and meat products in compliance with Food Safety and Inspection Service (FSIS) wholesomeness requirements. The commenter supported the recommendation by stating that Government effort would be duplicated and an unneccesary regulatory burden placed on the industry if both FSIS retention authority and AMS product control authority were used simultaneously by the two Agencies to restrict the movement and use of one product. The Agency recongizes that it is entirely possible for meat and meat products to fail to comply with both AMS and FSIS regulations. However, in any case involving noncompliance of meat and meat products with FSIS regulatory requirements, FSIS will have the primary responsibility of ensuring proper retention and disposition. AMS will only control meat and meat products for appropriate cause that are in compliance with FSIS regulatory requirements.

Another recommended modification was to permit an "authorized USDA representative" to release meat and meat products controlled under AMS product control authority in lieu of limiting the authority to release meat and meat products to "official graders or supervisors of grading" as stated in the proposal. Incorporating this recommendation would permit authorized FSIS personnel, under certain conditions, to release meat and meat products controlled by AMS. The commenter pointed out that in the Alternatives section and Figure 1 of the proposal the Agency states that an "authorized USDA representative" may release control of meat and meat products. However, in the regulatory language of the proposal, we limit the authority to release the control of meat and meat products to "official graders and supervisors of grading." This discrepancy has been corrected by modifying the language of Sections 54.11 and 54.17, as proposed, to permit the release of AMS controlled meat and meat products by an authorized USDA representative.

The final modification recommended by the supporting comments was for the Agency to address the conditions which must be met by an establishment for the timely release of controlled meat and meat products. AMS product control authority is designed to control only those meat and meat products that have been determined not to be in compliance with meat grading regulations (7 CFR Part 54) or are being held pending the results of an examination and are involved in, or in the vicinity of, an ongoing grading or certification program. The Agency will not control meat and meat products by use of the product control authority that are outside of the grading and certification programs conducted by AMS. For example, in a certification program, once a controlled product is removed from the processing area and designated by an establishment for commercial channels, the product will be released from AMS control. Therefore, exercising product control authority in this manner should not restrict normal commercial marketing or result in extended control periods that may lead to product deterioration and loss.

The one opposing comment stated that product control authority was unnecessary because the Agency could control noncomplying meat and meat products within its existing authority by withholding or removing official grading or certification marks. This is correct for meat and meat products that are officially graded or certified or products certified contingent upon the results of subsequent examinations. However, in most cases, ungraded or uncertified meat and meat products that fail to comply with the regulations do not receive official grading and certification marks. Consequently, noncomplying meat and meat products cannot be controlled by removing or withholding official grading and certification marks as the commenter suggests.

Therefore, based on the analysis discussed in the proposed rule (49 FR, No. 219, pages 44758–44760) and the analysis of the comments outlined above, the regulations governing the grading and certification of meats, prepared meats, and meat products (7 CFR Part 54) are, except for the case noted above, finalized as proposed.

In summary, the change involved in this amendment to the meat grading and certification regulations (7 CFR Part 54) grants official graders and their supervisors the authority to control the movement and use of meat and meat products which do not comply with the regulations or that need to be held pending the results of an examination.

List of Subjects in 7 CFR Part 54

Beef carcasses, Meat and meat products, Grading and certification, Standards, Food grades and standards, Food labeling.

PART 54—MEATS, PREPARED MEATS, AND MEAT PRODUCTS (GRADING, CERTIFICATION, AND STANDARDS)

1. The authority citation for Part 54 continues to read as follows:

Authority: Agricultural Marketing Act of 1946, Sec. 203, 205, as amended; 60 Stat. 1087, 1090, as amended (7 U.S.C. 1622 and 1624).

Subpart A—Regulations

Service

2. Section 54.11 is amended by revising paragraph (a)(1)(ix) and adding paragraph (a)(1)(x) to read as follows:

§ 54.11 Denial or withdrawal of service.

(a) * * *

(1) * * *

(ix) has knowingly used, moved, or otherwise altered, in any manner, meat or meat products identified by an official product control device, mark, or other identification as specified in Section 54.17, or has removed such official device, mark, or identification from the meat or meat products so identified without the express permission of an authorized representative of the USDA; or (x) has in any manner not specified in this paragraph violated subsection 203(h) of the AMA: *Provided,* That paragraph (a)(1)(vi) of this section shall not be deemed to be violated if the person in possession of any item mentioned therein notifies the Director or Chief without such delay that he has possession of such item and, in the case of an official device, surrenders it to the Chief, and, in the case of any other item, surrenders it to the Director or Chief or destroys it or brings it into compliance with the regulations by obliterating or removing the violative features under supervision of the Director or Chief: *And provided further, That* paragraphs (a)(1)(ii) through (ix) of this section shall not be deemed to be violated by any act committed by any person prior to the making of an application of service under the regulations by the principal person. An application or a request for service may be rejected or the benefits of the service may be otherwise denied to, or withdrawn from, any person who operates an establishment for which he has made application for service if, with the knowledge of such operator, any

other person conducting any operations in such establishment has committed any of the offenses specified in paragraphs (a)(1) (i) through (x) of this section after such application was made. Moreover, an application or a request for service made in the name of a person otherwise eligible for service under the regulations may be rejected, or the benefits of the service may be otherwise denied to, or withdrawn from, such a person (A) in case the service is or would be performed at an establishment operated (*1*) by a corporation, partnership, or other person from whom the benefits of the service are currently being withheld under this paragraph, or (*2*) by a corporation, partnership, or other person having an officer, director, partner, or substantial investor from whom the benefits of the service are currently being withheld and who has any authority with respect to the establishment where service is or would be performed; or (B) in case the service is or would be performed with respect to any product in which any corporation, partnership, or other person within paragraph (a)(1)(x)(A)(*1*) of this section has a contract or other financial interest.

* * * * *

3. Section 54.17 is amended by adding paragraph (g) to read as follows:

§ 54.17 Official identifications.

* * * * *

(g) A rectangular, serially numbered tag, on which a shield encloses the letters "USDA" and the words "Product Control," as shown in Figure 1, constitutes a form of official identification under the regulations for meat and meat products. Official graders and supervisors of grading may use "Product Control" tags or other methods and devices as approved by the Administrator for the identification and control of meat and meat products which are not in compliance with the regulations or are held pending the results of an examination. Any such meat or meat product so identified shall not be used, moved, or altered in any manner; nor shall official control identification be removed, without the express permission of an authorized representative of the USDA.

BILLING CODE 3410-02-M

FORM LS-10
(2-84)

NO. XXXXX

U.S. DEPARTMENT OF AGRICULTURE
AGRICULTURAL MARKETING SERVICE
LIVESTOCK DIVISION

USDA
Product Control

DO NOT REMOVE TAG
OR
USE PRODUCT
WITHOUT AUTHORIZATION

(SEE REVERSE)

NO.

PRODUCT TAGGED

NO. OF CONTAINERS

Obverse

The product(s) or container(s) to which this tag is attached is (are) controlled under authority of the Agricultural Marketing Act and is (are) not to be used, moved or altered in any manner without the expressed permission of an authorized representative of the United States Department of Agriculture. The unauthorized removal or alteration of this tag or utilization of the tagged product(s) is a violation of the Agricultural Marketing Act of 1946, as amended and regulations issued thereunder.

REMARKS:

AUTHORIZED EMPLOYEE DATE

PRODUCT CONTROL

LOCATION AND REMARKS:

AUTHORIZED EMPLOYEE DATE

FORM LS-10 (2-84) (Reverse)

Reverse

Figure 1

BILLING CODE 3410-02-C

Done at Washington, D.C. April 8, 1985.

William T. Manley,

Deputy Administrator, Marketing Programs.

[FR Doc. 85-8741 Filed 4-11-85; 8:45 am]

BILLING CODE 3410-02-M

---

7 CFR Part 910

[Lemon Reg. 511]

Lemons Grown in California and Arizona; Limitation of Handling

AGENCY: Agricultural Marketing Service, USDA.

ACTION: Final rule.

SUMMARY: This regulation establishes the quantity of fresh California-Arizona lemons that may be shipped to market at 295,000 cartons during the period April 14–20, 1985. Such action is needed to provide for orderly marketing of fresh lemons for the period due to the marketing situation confronting the lemon industry.

DATES: Effective for the period April 14–20, 1985.

FOR FURTHER INFORMATION CONTACT: William J. Doyle, Chief, Fruit Branch, F&V, AMS, USDA, Washington, D.C. 20250, telephone 202-447-5975.

SUPPLEMENTARY INFORMATION: This final rule has been reviewed under Secretary's Memorandum 1512-1 and Executive Order 12291, and has been designated a "non-major" rule. William T. Manley, Deputy Administrator, Agricultural Marketing Service, has certified that this action will not have a significant economic impact on a substantial number of small entities.

This final rule is issued under Marketing Order No. 910, as amended (7 CFR Part 910) regulating the handling of lemons grown in California and Arizona. The order is effective under the Agricultural Marketing Agreement Act of 1937, as amended (7 U.S.C. 601–674). The action is based upon recommendations and information submitted by the Lemon Administrative Committee and upon other available information. It is found that this action will tend to effectuate the declared policy of the act.

This action is consistent with the marketing policy currently in effect. The committee met publicly on April 9, 1985, at Los Angeles, California, to consider the current and prospective conditions of supply and demand and recommended a quantity of lemons deemed advisable to be handled during the specified week. The committee reports that the lemon demand pattern continues to be good on larger sizes, steady on middle sizes, and easy on smaller sizes of fruit.

It is further found that it is impracticable and contrary to the public interest to give preliminary notice, engage in public rulemaking, and postpone the effective date until 30 days after publication in the **Federal Register** (5 U.S.C. 553), because of insufficient time between the date when information became available upon which this regulation is based and the effective date necessary to effectuate the declared purposes of the act. Interested persons were given an opportunity to submit information and views on the regulation at an open meeting. It is necessary to effectuate the declared purposes of the act to make these regulatory provisions effective as specified, and handlers have been apprised of such provisions and the effective time.

List of Subjects in 7 CFR Part 910

Marketing agreements and orders, California, Arizona, Lemons.

PART 910—[AMENDED]

Section 910.811 is added as follows:

§ 910.811 Lemon Regulation 511.

The quantity of lemons grown in California and Arizona which may be handled during the period April 14, 1985, through April 20, 1985, is established at 295,000 cartons.

(Secs. 1–19, 48 Stat. 31, as amended; 7 U.S.C. 601–674)

Dated: April 10, 1985.

Thomas R. Clark,

Deputy Director, Fruit and Vegetable Division, Agricultural Marketing Service.

[FR Doc. 85-8992 Filed 4-11-85; 8:45 am]

BILLING CODE 3410-02-M

DEPARTMENT OF JUSTICE

Immigration and Naturalization Service

8 CFR Part 238

Contracts With Transportation Lines; Addition of LADECO Airlines

AGENCY: Immigration and Naturalization Service, Justice.

ACTION: Final rule.

SUMMARY: This rule adds Linea Aerea del Cobre, S.A. "LADECO" to the list of carriers which have entered into agreements with the Service to guarantee the passage through the United States in immediate and continuous transit of aliens destined to foreign countries.

EFFECTIVE DATE: March 29, 1985.

FOR FURTHER INFORMATION CONTACT: Loretta J. Shogren, Director, Policy Directives and Instructions, Immigration and Naturalization Service, 425 I Street NW., Washington, DC 20536, Telephone: (202) 633-3048.

SUPPLEMENTARY INFORMATION: The Commissioner of Immigration and Naturalization entered into an agreement with LADECO on March 29, 1985 to guarantee passage through the United States in immediate and continuous transit of aliens destined to foreign countries.

The agreement provides for the waiver of certain documentary requirements and facilities the air travel of passengers on international flights while passing through the United States.

Compliance with 5 U.S.C. 553 as to notice of proposed rulemaking and delayed effective date is unnecessary because the amendment merely makes an editorial change to the listing of transportation lines.

In accordance with 5 U.S.C. 605(b), the Commissioner of Immigration and Naturalization certifies that the rule will not have a significant impact on a substantial number of small entities.

This order constitutes a notice to the public under 5 U.S.C. 552 and is not a rule within the definition of section 1(a) of E.O. 12291.

List of Subjects in 8 CFR Part 238

Airlines, Aliens, Government contracts, Travel, Travel restriction.

PART 238—CONTRACTS WITH TRANSPORTATION LINES

Accordingly, Chapter I of Title 8 of the Code of Federal Regulations is amended as follows:

§ 238.3 [Amended]

In § 238.3, *Aliens in immediate and continuous transit*, the listing of transportation lines in paragraph (b) *Signatory lines* is amended by adding in alphabetical sequence, Linea Aerea del Cobre, S.A. "LADECO".

(Sections 103 and 238 of the Immigration and Nationality Act, as amended; (8 U.S.C. 1103 and 1228))

Dated: April 5, 1985.

Andrew J. Carmichael, Jr.,

Associate Commissioner, Examinations, Immigration and Naturalization Service.

[FR Doc. 85-8834 Filed 4-11-85; 8:45 am]

BILLING CODE 4410-10-M

DEPARTMENT OF AGRICULTURE

Food Safety and Inspection Service

9 CFR Part 327

[Docket No. 83-042A1]

Imported Product; Amendment to Withdrawal of Certain Countries From the List of Those Eligible for Importation of Meat Products

AGENCY: Food Safety and Inspection Service, USDA.

ACTION: Amendment to interim rules.

SUMMARY: On February 15, 1984, the Food Safety and Inspection Service (FSIS) published an interim rule with request for comments (49 FR 5727). This interim rule withdrew the Dominican Republic, El Salvador, Haiti, Mexico, Nicaragua, and Panama from the list of countries eligible under the Federal Meat Inspection Act (FMIA) to import cattle, sheep, swine, goat, and equine products into the United States. This action was necessary because those countries had failed to implement satisfactory residue testing and/or species verification programs, resulting in their no longer meeting provisions of the FMIA. On April 12, 1984, FSIS published an amendment to this interim rule which relisted the country of Panama as again being eligible under the FMIA to import the products of cattle, sheep, swine, and goats into the United States (49 FR 14497). On May 31, 1984, the countries of El Salvador and Nicaragua were also relisted as eligible to import the products of cattle, sheep, swine, and goats into this country (49 FR 22626). Since publication of those amendments, the Dominican Republic has also corrected the deficiencies in its inspection system and, therefore, is now being relisted as eligible to import the products of cattle, sheep, swine, and goats into the United States. All other aspects of the February 15, 1984, interim rule remain in effect.

DATE: Amendment to interim rule effective April 12, 1985.

FOR FURTHER INFORMATION CONTACT: Dr. William J. Havlik, Assistant Director, Foreign Programs Division, International Programs, Food Safety and Inspection Service, U.S. Department of Agriculture, Washington, D.C. 20250, (202) 447-7610.

SUPPLEMENTARY INFORMATION:

Background

On February 15, 1984, FSIS published in the **Federal Register** an interim rule with request for comments (49 FR 5727). This interim rule withdrew the Dominican Republic, El Salvador, Haiti, Mexico, Nicaragua, and Panama from the list of countries eligible under the Federal Meat Inspection Act (FMIA) to import the products of cattle, sheep, swine, goats, and equines (Mexico only) into the United States. The FMIA requires that in order for a country to be eligible to import meat products into the United States, that country must establish inspection standards that are "at least equal to" the requirements of the FMIA and the United States regulations which are applicable to official establishments in this country.

In order for a foreign country's inspection system to be considered "at least equal to" that of the United States, the country must provide for testing of fat, kidney, muscle and/or liver tissues for chlorinated hydrocarbons, organophosphates, trace metals, antibiotics, and (if applicable) hormones, using a method approved by the Secretary. In addition, the country must conduct an approved species verification program. Failure at that time of the Dominican Republic, El Salvador, Haiti, Mexico, Nicaragua, and Panama to implement satisfactory residue testing and/or species verification programs resulted in their being withdrawn from the list of countries eligible to import meat products into the United States.

In the February 15, 1984 interim rule withdrawing these countries, FSIS stated that once they had corrected the deficiencies in their residue testing and/or species verification programs, and the Administrator was satisfied that their systems meet all provisions of the FMIA, those countries would again be added to the list of countries eligible to import cattle, sheep, swine, and goat products into the United States.

The Dominican Republic has provided the Administrator with evidence showing that its system is now "at least equal to" that of the United States. Accordingly, this amendment to the February 15, 1984, interim rule (as previously amended on April 15, 1984 and May 31, 1984) makes the Dominican Republic again eligible to import cattle, sheep, swine, and goat products into the United States.

All other aspects of the February 15, 1984 interim rule remain in effect.

List of Subjects in 9 CFR Part 327

Imported products, Meat inspection.

PART 327—[AMENDED]

For reasons explained in the preamble, Part 327, Subchapter A, Chapter III of Title 9, Code of Federal Regulations, is amended as set forth below.

9 CFR Part 327 is amended as follows:

1. The authority citation for Part 327 is revised to read as follows:

Authority: 76 Stat. 663 [7 U.S.C. 450 *et seq.*]; 34 Stat. 1260, 81 Stat. 584, as amended [21 U.S.C. 601 *et seq.*]; 46 Stat. 689 [19 U.S.C. 1306].

§ 327.2 [Amended]

2. In Part 327, § 327.2(b) is amended by adding the following country to the list of countries eligible to import cattle, sheep, swine, and goat products into the United States:

Dominican Republic

Done at Washington, D.C. on: April 4, 1985.

Donald L. Houston,

Administrator, Food Safety and Inspection Service.

[FR Doc. 85-8865 Filed 4-11-85; 8:45 am]

BILLING CODE 3410-DM-M

DEPARTMENT OF TRANSPORTATION

Federal Aviation Administration

14 CFR Part 39

[Docket No. 85-CE-2-AD; Amdt. 39-5037]

Airworthiness Directive; Partenavia Costruzioni Aeronautiche S.p.A. Models P 68, P 68B, P 68C, P 68C-TC and P 68 Observer Airplanes

AGENCY: Federal Aviation Administration (FAA), DOT.

ACTION: Final rule.

SUMMARY: This amendment adopts a new Airworthiness Directive (AD), applicable to Partenavia Costruzioni Aeronautiche S.p.A. Models P 68, P 68B, P 68C, P 68C-TC and P 68 Observer airplanes which requires periodic visual inspections of the front and rear wing spars for cracks until reinforcement plates are installed. This action is based upon Partenavia receiving reports of cracks being found in the wing spars. The inspections required by this AD will identify these cracks so that they may be repaired before they adversely affect the airworthiness of the wing.

EFFECTIVE DATE: May 17, 1985. Compliance: As prescribed in the body of this AD.

ADDRESSES: Partenavia Service Bulletin (S/B) No. 65, Revision 1, dated September 27, 1984, applicable to this AD may be obtained from Partenavia Costruzioni Aeronautiche S.p.A. via Cava, Casoria-Napoli (Italy). A copy of this information is also contained in the Rules Docket, FAA, Office of the Regional Counsel, Room 1558, 601 East 12th Street, Kansas City, Missouri 64106.

FOR FURTHER INFORMATION CONTACT: Mr. H. Chimerine, Brussels Aircraft Certification Office, AEU-100, Europe, Africa and Middle East Office, FAA, c/o American Embassy, 1000 Brussels, Belgium; Telephone 513.38.30, or, Mr. J. Dow, FAA, ACE-109, 601 East 12th Street, Kansas City, Missouri 64106; Telephone (816) 374-6932.

SUPPLEMENTARY INFORMATION: A proposal to amend Part 39 of the Federal Aviation Regulations to include an AD requiring repetitive visual inspections for cracks and repair of cracks found in the front and rear wing spars of all Partenavia Costruzioni Aeronautiche S.p.A. Models P 68, P 68B, P 68C, P 68C-TC and P 68 Observer airplanes was published in the **Federal Register** on February 4, 1985 (50 FR 4870). The proposal resulted from reports of cracks found in the spar caps prompting the manufacturer to initiate a service bulletin describing corrective action to prevent crack growth and assure wing structural integrity.

The Registro Aeronautico Italiano (R.A.I.), who has responsibility and authority to maintain the continuing airworthiness of these airplanes in Italy, has classified this Service Bulletin No. 65, Revision 1, dated September 27, 1984, and the actions recommended therein by the manufacturer as mandatory to assure the continued airworthiness of the affected airplanes.

On airplanes operated under Italian registration, this action has the same effect as an AD on airplanes certificated for operation in the United States. The FAA relies upon the certification of R.A.I. combined with FAA review of pertinent documentation in finding compliance of the design of these airplanes with the applicable United States airworthiness requirements and the airworthiness and conformity of products of this design certificated for operation in the United States.

The FAA has examined the available information related to the issuance of Partenavia S/B No. 65, Revision 1, dated September 1984, and the mandatory classification of this Service Bulletin by the R.A.I. and determined that a Notice of Proposed Rulemaking was appropriate.

Interested persons have been afforded an opportunity to comment on the proposal. No comments or objections were received on the proposal or the FAA determination of the related cost to the public. Accordingly the proposal is adopted without change.

There are approximately 56 airplanes of U.S. registry affected by this AD. The cost of complying with the AD is estimated to be $15,680 to the private sector. The cost of compliance with this AD is so small that the expense of compliance will not be a significant financial impact on any small entities operating these airplanes.

Therefore, I certify that this action (1) is not a "major rule" under Executive Order 12291; (2) is not a "significant rule" under DOT Regulatory Policies and Procedures (44 FR 11034; February 26, 1979); and (3) will not have a significant economic impact on a substantial number of small entities under the criteria of the Regulatory Flexibility Act. A copy of the final evaluation prepared for this action is contained in the regulatory docket. A copy of it may be obtained by contacting the Rules Docket at the location provided under the caption "**ADDRESSES**".

List of Subjects in 14 CFR Part 39

Air transportation, Aviation safety, Aircraft, Safety.

Adoption of the Amendment

Accordingly pursuant to the authority delegated to me by the Administrator, § 39.13 of the Federal Aviation Regulation (14 CFR 39.13) is amended by adding the following new AD.

Partenavia Costruzioni Aeronautiche S.p.A.: Applies to all Model P 68, P 68B, P 68C, P 68C-TC and P 68 Observer (Serial Numbers 001 thru 328) airplanes certificated in any category.

Compliance: Required as indicated after the effective date of this AD, unless already accomplished.

To preclude the failure of the wing spar, within 100 hours time-in-service after the effective date of this AD or upon accumulating 2,100 hours time-in-service, whichever occurs later, and thereafter at intervals not exceeding 500 hours time-in service since the last inspection, accomplish the following:

(a) Visually inspect the front and rear wing spars for cracks as described in Part A of Partenavia S/B No. 65, Revision 1, dated September 27, 1984.

(b) If cracks are found as a result of any inspection required by Paragraph (a) of this AD, prior to further flight, accomplish the modification described in Part B of Partenavia S/B No. 65, Revision 1, dated September 27, 1984.

(c) The repetitive inspections required by Paragraph (a) of this AD may be discontinued when the modification in Paragraph (b) of this AD is accomplished.

(d) Airplanes may be flown in accordance with FAR 21.197 to a location where this AD may be accomplished.

(e) An equivalent method of compliance with this AD, if used, must be approved by the Manager, Aircraft Certification Staff, AEU-100, Europe, Africa and Middle East Office, FAA, c/o American Embassy, 1000 Brussels, Belgium.

(Secs. 313(a), 601 and 603 of the Federal Aviation Act of 1958, as amended (49 U.S.C. 1354(a), 1421 and 1423); 49 U.S.C. 106(g) (Revised, Pub. L. 97-449, January 12, 1983); Sec. 11.89 of the Federal Aviation Regulations (14 CFR 11.89)

This amendment becomes effective on May 17, 1985.

Issued in Kansas City, Missouri, on April 2, 1985.

Murray E. Smith,

Director, Central Region.

[FR Doc. 85-8779 Filed 4-11-85; 8:45 am]

BILLING CODE 4910-13-M

---

14 CFR Part 97

[Docket No. 24581; Amdt. No. 1292]

Standard Instrument Approach Procedures; Miscellaneous Amendments

AGENCY: Federal Aviation Administration (FAA), DOT.

ACTION: Final rule.

SUMMARY: This amendment establishes, amends, suspends, or revokes Standard Instrument Approach Procedures (SIAPs) for operations at certain airports. These regulatory actions are needed because of the adoption of new or revised criteria, or because of changes occurring in the National Airspace System, such as the commissioning of new navigational facilities, addition of new obstacles, or changes in air traffic requirements. These changes are designed to provide safe and efficient use of the navigable airspace and to promote safe flight operations under instrument flight rules at the affected airports.

DATES: An effective date for each SIAP is specified in the amendatory provisions.

ADDRESSES: Availability of matters incorporated by reference in the amendment is as follows:

For Examination—

1. FAA Rules Docket, FAA Headquarters Building, 800 Independence Avenue SW., Washington, D.C. 20591;

2. The FAA Regional Office of the region in which the affected airport is located; or

3. The Flight Inspection Field Office which originated the SIAP.

For Purchase—

Individual SIAP copies may be obtained from:

1. FAA Public Inquiry Center (APA-430), FAA Headquarters Building, 800

Independence Avenue SW., Washington, D.C. 20591; or

2. The FAA Regional Office of the region in which the affected airport is located.

By Subscription—

Copies of all SIAPs, mailed once every 2 weeks, are for sale by the Superintendent of Documents, U.S. Government Printing Office, Washington, D.C. 20402.

FOR FURTHER INFORMATION CONTACT: Donald K. Funai, Flight Procedures Standards Branch (AFO-230), Air Transportation Division, Office of Flight Operations, Federal Aviation Administration, 800 Independence Avenue SW., Washington, D.C. 20591; telephone (202) 426-8277.

SUPPLEMENTARY INFORMATION: This amendment to Part 97 of the Federal Aviation Regulations (14 CFR Part 97) prescribes new, amended, suspended, or revoked Standard Instrument Approach Procedures (SIAPs). The complete regulatory description of each SIAP is contained in official FAA form documents which are incorporated by reference in this amendment under 5 U.S.C. 552(a), 1 CFR Part 51, and § 97.20 of the Federal Aviation Regulations (FARs). The applicable FAA Forms are identified as FAA Forms 8260-3, 8260-4, and 8260-5. Materials incorporated by reference are available for examination or purchase as stated above.

The large number of SIAPs, their complex nature, and the need for a special format make their verbatim publication in the **Federal Register** expensive and impractical. Further, airmen do not use the regulatory text of the SIAPs, but refer to their graphic depiction on charts printed by publishers of aeronautical materials. Thus, the advantages of incorporation by reference are realized and publication of the complete description of each SIAP contained in FAA form document is unnecessary. The provisions of this amendment state the affected CFR (and FAR) sections, with the types and effective dates of the SIAPs. This amendment also identifies the airport, its location, the procedure identification and the amendment number.

This amendment to Part 97 is effective on the date of publication and contains separate SIAPs which have compliance dates stated as effective dates based on related changes in the National Airspace System or the application of new or revised criteria. Some SIAP amendments may have been previously issued by the FAA in a National Flight Data Center (FDC) Notice to Airmen (NOTAM) as an emergency action of immediate flight safety relating directly to published aeronautical charts. The circumstances which created the need for some SIAP amendments may require making them effective in less than 30 days. For the remaining SIAPs, an effective date at least 30 days after publication is provided.

Further, the SIAPs contained in this amendment are based on the criteria contained in the U.S. Standard for Terminal Instrument Approach Procedures (TERPs). In developing these SIAPs, the TERPs criteria were applied to the conditions existing or anticipated at the affected airports. Because of the close and immediate relationship between these SIAPs and safety in air commerce, I find that notice and public procedure before adopting these SIAPs is unnecessary, impracticable, and contrary to the public interest and, where applicable, that good cause exists for making some SIAPs effective in less than 30 days.

Index

14 CFR Part 97: Approaches, Standard Instrument, Aviation Safety

Adoption of the Amendment

Accordingly, pursuant to the authority delegated to me, Part 97 of the Federal Aviation Regulations (14 CFR Part 97) is amended by establishing, amending, suspending, or revoking Standard Instrument Approach Procedures, effective at 0901 G.m.t. on the dates specified, as follows:

1. By amending § 97.23 VOR, VOR/DME, VOR or TACAN, and VOR/DME or TACAN SIAPs identified as follows:

. . . Effective June 6, 1985

Parsons, KS—Tri-City, VOR RWY 13, Amdt. 3
Austin, MN—Austin Muni, VOR RWY 36, Amdt. 12
Austin, MN—Austin Muni, VOR RWY 18, Amdt. 12
Miles City, MT—Frank Wiley Field, VOR RWY 4, Amdt. 11
Miles City, MT—Frank Wiley Field, VOR/DME RWY 22, Amdt. 8
Holdrege, NE—Brewster Field, VOR/DME-A, Orig.
Batavia, OH—Clermont County, VOR-B, Amdt. 2
Rapid City, SD—Rapid City Regional, VOR or TACAN RWY 32, Amdt. 22
Rapid City, SD—Rapid City Regional, VOR/DME or TACAN RWY 14, Amdt. 14
Galveston, TX—Scholes Field, VOR RWY 13, Amdt. 15, Cancelled
Galveston, TX—Scholes Field, VOR RWY 13, Orig.
Houston, TX—Clover Field, VOR/DME-A, Amdt. 2
Houston, TX—Houston Gulf, VOR/DME RWY 31, Orig., Cancelled
Houston, TX—Houston Gulf, VOR RWY 31, Orig.
Houston, TX—William P. Hobby, VOR/DME RWY 31L, Amdt. 12
Houston, TX—William P. Hobby, VOR/DME 2 RWY 31L, Amdt. 2, Cancelled
Houston, TX—William P. Hobby, VOR RWY 13R, Amdt. 15
La Porte, TX—La Porte Muni, VOR-A, Amdt. 10
Plainview, TX—Hale County, VOR RWY 4, Amdt. 8
LaCrosse, WI—LaCrosse Muni, VOR RWY 36, Amdt. 25
Lacrosse, WI—LaCrosse Muni, VOR RWY 13, Amdt. 24

. . . Effective May 23, 1985

Orland, FL—Orlando Executive, VOR RWY 13, Amdt. 12
Orland, FL—Orlando Executive, VOR RWY 31, Amdt. 13
Panama City, FL—Panama City-Bay County, VOR or TACAN RWY 14, Amdt. 14
Panama City, FL—Panama City-Bay County, VOR or TACAN RWY 32, Amdt. 9
Panama City, FL—Panama City-Bay County, VOR or TACAN-A, Amdt. 12
Wabash, IN—Wabash Muni, VOR-A, Amdt. 7
Tewksbury, MA—Tew-Mac, VOR RWY 21, Amdt. 7
Coldwater, MI—Branch County Memorial, VOR RWY 24, Amdt. 1
Coldwater, MI—Branch County Memorial, VOR RWY 6, Amdt. 1
Niles, MI—Jerry Tyler Meml, VOR RWY 3, Amdt. 6
Niles, MI—Jerry Tyler Meml, VOR RWY 21, Amdt. 2
Tekamah, NE—Tekamah Muni, VOR RWY 32, Amdt. 2
Erwin, NC—Harnett County, VOR/DME RWY 4, Amdt. 1
Hickory, NC—Hickory Muni, VOR RWY 24, Amdt. 22

. . . Effective May 9, 1985

Bermuda Dunes, CA—Bermuda Dunes, VOR RWY 29, Amdt. 1, Cancelled

2. By amending § 97.25 LOC, LOC/DME, LDA, LDA/DME, SDF, and SDF/DME SIAPs identified as follows:

. . . Effective June 6, 1985

Concord, CA—Buchanan Field, LDA RWY 19R, Amdt. 5
Kalamazoo, MI—Kalamazoo County, LOC BC RWY 17, Amdt. 17

. . . Effective May 23, 1985

Orlando, FL—Orlando Executive, LOC BC RWY 25, Amdt. 15
Americus, GA—Souther Field, LOC RWY 22, Amdt. 1
Waterloo, IA—Waterloo Muni, LOC BC RWY 30, Amdt. 8

3. By amending § 97.27 NDB and NDB/DME SIAPs identified as follows:

. . . Effective June 6, 1985

Chicago, IL—Chicago-O Hare Intl, NDB RWY 9R, Amdt. 15
Parsons, KS—Tri-City, NDB RWY 35, Amdt. 4
Parsons, KS—Tri-City, NDB RWY 17, Amdt. 7

Louisville, KY—Standiford Field, NDB RWY 1, Amdt. 5
Miles City, MT—Frank Wiley Field, NDB RWY 4, Amdt. 5
Holdrege, NE—Brewster Field, NDB RWY 18, Amdt. 4
Batavia, OH—Clermont County, NDB-A, Amdt. 4
Rapid City, SD—Rapid City Regional, NDB RWY 32, Amdt. 1
Angleton/Lake Jackson, TX—Brazoria County, NDB RWY 17, Amdt. 1
Houston, TX—Houston-Southwest, NDB RWY 28, Amdt. 3
Houston, TX—Houston-Southwest, NDB RWY 10, Amdt. 4
La Porte, TX—La Porte Muni, NDB RWY 30, Amdt. 2
LaCrosse, WI—LaCrosse Muni, NDB RWY 18, Amdt. 10

. . . *Effective May 23, 1985*

Orlando, FL—Orlando Executive, NDB RWY 7, Amdt. 13
Panama City, FL—Panama City-Bay County, NDB RWY 14, Amdt. 3
Americus, GA—Souther Field, NDB RWY 22, Amdt. 1
Atlanta, GA—The William B. Hartsfield Atlanta Intl, NDB RWY 8R, Amdt. 44
Atlanta, GA—The William B. Hartsfield Atlanta Intl, NDB RWY 26L, Amdt. 15
Vinton, IA—Vinton Veterans Mem Arpk, NDB RWY 16, Amdt. 3
Vinton, IA—Vinton Veterans Mem Arpk, NDB RWY 27, Amdt. 2
Waterloo, IA—Waterloo Muni, NDB RWY 12, Amdt. 8
Wabash, IN—Wabash Muni, NDB RWY 27, Amdt. 9
Staunton/Waynesboro/Harrisonburg, VA—Shenandoah Valley, NDB RWY 4, Amdt. 7
Huntington, WV—Tri-State/Walker Long Field, NDB RWY 12, Amdt. 15

. . . *Effective May 9, 1985*

Grand Junction, CO—Walker Field, NDB RWY 11, Amdt. 17, Cancelled

4. By amending § 97.29 ILS, ILS/DME, ISMLS, MLS, MLS/DME and MLS/RNAV SIAPs identified as follows:

. . . *Effective June 6, 1985*

Chicago, IL—Chicago-O Hare Intl, ILS RWY 9L, Amdt. 6
Rapid City, SD—Rapid City Regional, ILS RWY 32, Amdt. 15
Angleton/Lake Jackson, TX—Brazoria County, ILS Rwy 17, Amdt. 1
Galveston, TX—Scholes Field, ILS RWY 13, Amdt. 6
Houston, TX—William P. Hobby, ILS RWY 13R, Amdt. 8
LaCrosse, WI—LaCrosse Muni, ILS RWY 18, Amdt. 12

. . . *Effective May 23, 1985*

Orlando, FL—Orlando Executive, ILS RWY 7, Amdt. 18
Panama City, FL—Panama City-Bay County, ILS RWY 14, Amdt. 13
Atlanta, GA—The William B. Hartsfield Atlanta Intl, ILS RWY 8R, Amdt. 57
Atlanta, GA—The William B. Harisfield Atlanta Intl, ILS RWY 26L, Amdt. 17
Waterloo, IA—Waterloo Muni, ILS RWY 12, Amdt. 6
Manchester, NH—Manchester Arpt/Grenier Industrial Airpark, ILS RWY 35, Amdt. 14
Greenville, SC—Greenville Downtown, ILS RWY 36, Amdt. 26
Staunton/Waynesboro/Harrisonburg, VA—Shenandoah Valley, ILS RWY 4, Amdt. 5
Huntington, WV—Tri-State/Walker-Long Field, ILS RWY 30, Amdt. 2
Huntington, WV—Tri-State/Walker-Long Field, ILS RWY 12, Amdt. 8

. . . *Effective April 2, 1985*

Hilo, HI—General Lyman Field, ILS RWY 26, Amdt. 9

5. By amending § 97.31 RADAR SIAPS identified as follows:

. . . *Effective May 23, 1985*

Orlando, FL—Orlando Executive, RADAR-1, Amdt. 21
Huntington, WV—Tri-State/Walker-Long Field, RADAR-1, Amdt. 4

6. By amending § 97.33 RNAV SIAPs identified as follows:

. . . *Effective June 6, 1985*

Parsons, KS—Tri-City, RNAV RWY 17, Amdt. 4
Parsons, KS—Tri-City, RNAV RWY 35, Amdt. 4
Houston, TX—Houston-Southwest, RNAV RWY 28, Amdt. 2

. . . *Effective May 23, 1985*

Manchester, NH—Manchester Arpt/Grenier Industrial Airpark, RNAV RWY 6, Amdt. 2
Danville, VA—Danville Muni, RNAV RWY 20, Amdt. 1

(Secs. 307, 313(a), 601, and 1110, Federal Aviation Act of 1958 (49 U.S.C. §§ 1348, 1354(a), 1421, and 1510); 49 U.S.C. 106(g) (Revised, Pub. L. 97-449, January 12, 1983); and 14 CFR 11.49(b)(3)).

Note.—The FAA has determined that this regulation only involves an established body of technical regulations for which frequent and routine amendments are necessary to keep them operationally current. It, therefore—(1) is not a "major rule" under Executive Order 12291; (2) is not a "significant rule" under DOT Regulatory Policies and Procedures (44 FR 11034; February 26, 1979); and (3) does not warrant preparation of a regulatory evaluation as the anticipated impact is so minimal. For the same reason, the FAA certifies that this amendment will not have a significant economic impact on a substantial number of small entities under the criteria of the Regulatory Flexibility Act.

Issued in Washington, D.C. on April 5, 1985.

John S. Kern,

Acting Director of Flight Operations.

Note.—The incorporation by reference in the preceding document was approved by the Director of the Federal Register on December 31, 1980, and reapproved as of January 1, 1982.

[FR Doc. 85-8782 Filed 4-11-85; 8:45 am]

BILLING CODE 4910-13-M

14 CFR Part 121

[Docket No. 24073; Amdt. 121-185]

Airplane Cabin Fire Protection

Correction

In FR Doc. 85-7538, beginning on page 12726 in the issue of Friday, March 29, 1985, make the following corrections:

On page 12733, second column, first line of § 121.309(c)(2), "April" should have read "October"; and in the third column, ninth line of § 121.309(c)(4), "April" should read "October".

BILLING CODE 4910-13-M

DEPARTMENT OF COMMERCE

International Trade Administration

15 CFR Part 373

[Docket No. 50336-5036]

Change in Reporting Frequency From Monthly to Quarterly Under the Distribution License Procedure

AGENCY: Office of Export Administration, International Trade Administration, Commerce.

ACTION: Final rule.

SUMMARY: The Distribution License is a special licensing procedure designed to facilitate the export of commodities under large scale international marketing programs. This rule amends § 373.3 of the Export Administration Regulations by changing the requirement for reporting of exports destined for Switzerland and Yugoslavia from monthly to quarterly. The frequency of reporting under this procedure is being reduced under the Office of Export Administration's recent institution of a comprehensive auditing program which has materially strengthened its export control program and also enabled it to reduce the frequency of required reports. This reduction is consistent with the Administration's policy of reducing unnecessary regulatory burdens.

DATES: This rule is effective April 12, 1985.

FOR FURTHER INFORMATION CONTACT: Roy Flinn, Office of Export Administration, Department of Commerce, Washington, D.C. 20230 (Telephone (202) 377-3856).

SUPPLEMENTARY INFORMATION:

Rulemaking Requirements

In connection with various rulemaking requirements, the Office of Export Administration has determined that:

1. The provisions of the Administrative Procedure Act requiring notice of proposed rulemaking, an opportunity for public participation, and a delay in effective date (5 U.S.C. 553) are inapplicable because this regulation involves a foreign affairs function of the United States.

2. This rule makes a regulatory burden consistent with requirements under the Paperwork Reduction Act of 1980, 44 U.S.C. 3501 *et seq.* by replacing the requirement for monthly reports under the Distribution License Procedure to quarterly reports.

3. Because a notice of proposed rulemaking is not being published for this rule, it is not a rule within the meaning of section 601(2) of the Regulatory Flexibility Act, 5 U.S.C. 601(2) and is not subject to the requirements of that Act. Accordingly, no initial or final Regulatory Flexibility Analysis has been or will be prepared.

4. Because this rule concerns a foreign affairs function of the United States, it is not a rule within the meaning of Section 1(a) of Executive Order 12291 and, accordingly, is not subject to the requirements of that Order. Accordingly, no preliminary or final Regulatory Impact Analysis has been or will be prepared.

Therefore, this regulation is issued in final form. Although there is no formal comment period, public comments on this regulation are welcome on a continuing basis.

List of subjects in 15 CFR Part 373

Exports.

PART 373—[AMENDED]

Accordingly, § 373.3 (g) and (i) of the Export Administration Regulations (15 CFR Parts 368–399) are revised and the OMB control numbers are added to the end of the section to read as follows:

§ 373.3 Distribution license.

* * * * *

(G) Special documentation for Specific Destinations. If a Form ITA-6052P authorizes distribution or use within Switzerland or Yugoslavia, a Swiss Blue Import Certificate or a Yugoslav End-Use Certificate, as appropriate, must be obtained prior to any export or reexport to these destinations. As shipments are made to these destinations under the Swiss Blue Import Certificates and Yugoslav End-Use Certificates, they must be reported to the Office of Export Administration by submitting all completed certificates or copies of partially used certificates with a cover sheet identifying the quarter in which the complete or partial shipment was made. These should cover all such shipments during the particular quarter and should be forwarded to the Office of Export Administration at the address in § 373.1. Shipments made after the certificates are transmitted to the Office of Export Administration shall continue to be reported quarterly by letter, giving the certificate number, the quantities and dates of any such shipments made during the quarter, and the balance remaining unused at the end of the quarter. This special documentation requirement is also subject to certain recordkeeping provisions of § 373.3.

* * * * *

(i) *Reexports.*— (1) *Distributor.* A distributor who is an approved consignee under a Distribution License may reexport commodities received under the Distribution License in accordance with the following rules:

(i) An approved consignee may reexport to any of the U.S. exporter's other consignees who have been approved under the Distribution License procedure.

(ii) An approved consignee who is a subsidiary, affiliate or branch of the U.S. exporter may reexport to any approved destination included in the sales territory assigned by the U.S. exporter, provided the country is an eligible country as defined in § 373.3(a).

(iii) Other approved distributors may reexport to any approved destination that is included in a formal written agreement with the U.S. exporter, or its wholly owned subsidiary, provided the country is an eligible country as defined in § 373.3(a).

(iv) An approved consignee, regardless of whether it is a subsidiary, affiliate or branch of the U.S. exporter, may reexport for use or distribution within Switzerland or Yugoslavia only if the reexport is covered by a Swiss Blue Import Certificate or a Yugoslav End-Use Certificate, as applicable. The Swiss Blue Import Certificate need not be submitted to the Office of Export Administration, but shall be retained in accordance with the recordkeeping provisions described in § 373.3(1)(3). The original of each Yugoslav End-Use Certificate issued, or a reproduced copy, if the original is required by the government of the country in which the distributor is located, shall be immediately forwarded by the distributor to the U.S. exporter. The original or reproduced copies received from the distributor shall be submitted by the U.S. exporter, on a quarterly basis, to the Office of Export Administration at the address in § 373.1, with a letter identifying the distributors from which received. While an approved consignee in Switzerland, without obtaining a Swiss Blue Import Certificate, may stock commodities in Switzerland for reexport to other approved consignees in other countries, such commodities may be released for distribution or use within Switzerland only after a Swiss Blue Import Certificate covering the transaction has been obtained. These documents shall be retained in accordance with the recordkeeping provisions of § 373.3(1)(3).

(v) An approved consignee may reexport only to eligible countries. See Supplement No. 1 to Part 373 for country limitations on certain commodities.

* * * * *

(Recordkeeping requirements in paragraph (g) are approved by the Office of Management and Budget under OMB No. 0625–0052. Recordkeeping requirements in paragraph (i) are approved by the Office of Management and Budget under OMB Nos. 0625–0052 and 0625–0104.)

Authority: (Secs. 203, 206, Pub. L. 95–223, Title II, 91 Stat. 1626, 1628 (50 U.S.C. 1702, 1704) Executive Order No. 12470 of March 30, 1984 (49 FR 13099, April 3, 1984).

Date: April 5, 1985.

James K. Pont,

Acting Director, Office of Export Administration, International Trade Administration.

[FR Doc. 85–8599 Filed 4–11–85; 8:45 am]

BILLING CODE 3510-DT-M

DEPARTMENT OF ENERGY

Federal Energy Regulatory Commission

18 CFR Parts 2, 154, 157, 201, 270, and 271

[Docket Nos. RM83-72-001, et al. and RM82-16-001, et al.; Order No. 391-A]

Production Under the Natural Gas Policy Act of 1978; Order Denying Rehearing and Clarifying Final Rule

Issued: April 10, 1985.

AGENCY: Federal Energy Regulatory Commission, DOE.

ACTION: Order denying rehearing and clarifying final rule.

SUMMARY: The Federal Energy Regulatory Commission is issuing this Order No. 391–A to deny rehearing of and clarify Order No. 391. 49 FR 33849 (August 27, 1984); III FERC Stats. & Regs. ¶ 30,588 (1984). Order No. 391 amended various sections of the Commission's regulations in order to implement the Supreme Court's decision in *Public Service Commission of New York* v. *Mid-Louisiana Gas Co.*, —— *U.S.* ——,

103 S. Ct. 3024 (1983). The Mid-Louisiana decision held that the pricing provisions of the Natural Gas Policy Act of 1978 are applicable to pipeline production, that is, gas produced by natural gas pipelines and taken into their transmission systems for resale.

EFFECTIVE DATE: This order is effective April 10, 1985.

FOR FURTHER INFORMATION CONTACT: Richard Mattingly, Office of the General Counsel, Federal Energy Regulatory Commission, 825 North Capitol Street, NE., Washington, D.C. 20426, (202) 357-8317.

SUPPLEMENTARY INFORMATION:

Before Commissioners: Raymond J. O'Connor, Chairman; Georgiana Sheldon, A.G. Sousa, Oliver G. Richard III and Charles G. Stalon.

In the matter of First Sales of Pipeline Production Under Section 2(21) of the Natural Gas Policy Act of 1978, Docket Nos. RM83-72-001, 002, 003, 004, 005, 006, 007, 008, and 009; First Sales by Affiliates, Docket Nos. RM82-16-001, 002, 003, 004, 005, 006, 007, 008 and 009.

I. Introduction

The Federal Energy Regulatory Commission, on August 22, 1984, issued Order No. 391,[1] a Final Rule implementing the Supreme Court's decision in *Public Service Comm'n of the State of New York* v. *Mid-Louisiana Gas Co., et al.*[2] The *Mid-Louisiana* decision held that the pricing provisions of the Natural Gas Policy Act of 1978 (NGPA)[3] are applicable to pipeline production, that is, gas produced by natural gas pipeline companies and taken into their transmission systems for subsequent resale. This Order No. 391-A denies rehearing of and clarifies Order No. 391.

II. Background

Congress established categories of ceiling prices applicable to certain first sales of natural gas under Title I of the NGPA. In Order No. 391, the Commission authorized pipelines to receive NGPA maximum lawful prices for their own production. The Commission amended its regulations to include within the definition of "first sale", found in section 2(21) of the NGPA, the intracompany transfer of gas from a pipeline's production division to its transmission division. The transfer was defined as taking place at the wellhead. In addition, the Commission established several rules applicable to pipeline production. These include: (1) Pipelines may continue to price certain gas on a cost-of-service basis, subject to Commission review; (2) guidelines were established for pricing certain gas that previously was priced on a cost-of-service basis; and (3) an intracompany operating statement must be filed by each interstate pipeline producer.

The Commission received nine timely requests for rehearing.[4] As discussed below, the Commission finds that the requests for rehearing do not present any new facts or arguments which would warrant modification of the Order No. 391. Accordingly, the requests for rehearing are denied.

III. Discussion

A. Cost-of-Service Pricing

One applicant requests rehearing of the Commission's decision in the final rule to continue permitting a pipeline to price gas it produces on a cost-of-service basis. This petitioner contends that the Commission's authority to establish a cost-of-service rate that is higher than the otherwise applicable NGPA rate is limited by the affiliated entities test under NGPA section 601(b)(1)(E). The applicant urges the Commission to modify § 154.42(c) to apply the affiliated entities test as a ceiling on the cost-of-service rate.

The Commission believes its legal authority under the NGA and NGPA to establish a cost-of-service price greater than the otherwise applicable NGPA price is only limited by the just and reasonable standard in the NGA. In response to the applicant the Commission provides the following clarification.

NGPA section 109(b)(2) gives the Commission the authority to establish a rate higher than the applicable maximum lawful price, if the Commission makes a just and reasonable finding. This price can apply to any gas that qualifies for the section 109 price, *i.e.* natural gas produced from any new well not otherwise qualified for a higher price; natural gas committed or dedicated to interstate commerce on November 8, 1978, and for which a just and reasonable rate was not in effect; and natural gas not committed or dedicated to interstate commerce which was not subject to an existing contract on November 8, 1978. The Commission also has the authority to establish a just and reasonable rate higher than the applicable maximum lawful price for section 104 gas under NGPA section 104(b)(2). This authority applies to natural gas that was committed or dedicated to interstate commerce on November 8, 1978 if a just and reasonable rate was in effect for that gas on that date. In order for the Commission to set a cost-of-service rate for pipeline production it must find that that rate is just and reasonable under section 4 of the Natural Gas Act. The NGPA does not require the Commission to add the affiliated entities test to this cost-of-service review.

When the Commission authorized a pipeline to use cost-of-service pricing for its production, it meant only to permit the pipeline that had been pricing its production on that basis to continue to price it on that basis. This authorization was intended to allow pipelines that could not switch to NGPA pricing because of settlements accepted and approved by the Commission to remain on cost-of-service.

The Commission emphasizes that it did not intend to allow a pipeline not currently using a cost-of-service methodology to switch to this methodology in the future for any of its production in an attempt to avoid the market price at the wellhead. Furthermore, much if not all of the gas is now price-deregulated and the Commission believes that the best pricing mechanism for this gas is the market.

B. Effect of Settlements on Pricing of Pipeline Production

AEPCO requests the Commission to modify the rule to require that new natural gas which by settlement has been priced on a cost-of-service basis shall continue to be priced on that basis notwithstanding enactment of the NGPA. AEPCO alleges that the rule, as issued, could be interpreted to prohibit cost-of-service pricing of pipeline production from wells drilled after the effective date of the NGPA (December 1, 1978).

In promulgating this rule, the Commission did not interfere with approved settlements. Under the rule, pipeline production priced on a cost-of-service basis under prior settlements will continue to be so priced during the life of the settlements. To the extent prior settlements provide for the pricing of pipeline production on a cost-of-service basis subsequent to December 1, 1978, those settlements will be given full

[1] Production under Section 2(21) of the Natural Gas Policy Act of 1978, 49 FR 33,849 (Aug. 27, 1984) (Docket Nos. RM83-72-000 and RM82-16-000).

[2] —— U.S. ——, 103 S. Ct. 3024 (1983).

[3] 15 U.S.C. 3301-3432 (1982).

[4] Rehearing requests were filed by Arizona Electric Power Cooperative, Inc. and the City of Willcox, Arizona (AEPCO); National Fuel Gas Supply Corporation; El Paso Natural Gas Company; Public Service Commission of New York; Mid Louisiana Gas Company; Kentucky West Virginia Gas Company; Consolidated Gas Transmission Corporation; Phelps Dodge Corporation, Magma Copper Company, ASARCO Inc., Inspiration Consolidated Copper Company and Kennecott Corporation (jointly); and Phillips Petroleum Company and Phillips Oil Company.

force and effect. There is no need to modify the rule.

C. Designation of Transfer Point

Order No. 391 establishes the wellhead as the point of transfer of gas from the pipeline's production division to its transmission division and thus the point at which the NGPA ceiling price is applied. The order further provides that by designating the wellhead as the transfer point, any production-related costs incurred by the pipeline will be incurred by the pipeline's transmission division, and will be reviewed in the pipelines's rate proceedings under the Natural Gas Act.[5]

AEPCO argues that a pipeline should not be able to collect more production-related costs with respect to its own production than could an independent producer, and that the Commission's designation of the wellhead as the point of delivery frustrates this requirement and distorts application of the affiliated entities test under section 601(b)(1)(E). AEPCO provides an example of this preceived problem, which is as follows. The delivery of gas under a first sale by a producer may occur at a point distant from the wellhead. The producer may agree to gather the gas to the point of delivery to the pipeline and may agree to absorb the cost of this gathering or, alternatively, to charge the pipeline for this service up to the allowed limit under the Commission's regulations.[6] However, if another well in the same field is owned by a pipeline and the pipeline performs the production-related service, it may recover the actual cost of the service even if that cost exceeds the maximum amount a producer would be authorized to collect.[7]

In order to remedy this alleged infirmity in the rule, AEPCO recommends that pipelines should be authorized to collect only those production-related cost allowances available to producers. As a corollary, AEPCO argues that all investment in gathering, processing and similar facilities which provide production-related services to its own production must be removed from each pipeline's rate base and all production-related expenses applicable to pipeline production must be removed from each pipeline's cost-of-service.

AEPCO's real argument is not about the proper transfer point but about how to treat the recovery of production-related costs by producer-pipelines in light of the affiliated entities rule. While a pipeline may receive either more or less production-related costs than a producer in a given situation, that fact provides no basis for modifying this rule. The Commission has previously established policies governing production-related costs for first sales. Under § 271.1104 producers are entitled to recover production-related costs, if authorized by contract, up to the amounts specified in that regulation. The regulation provides generic allowances for gathering and compression; allowances for other services are based on actual cost. Pipelines may recover, for comparable services, their actual costs, subject to Commission review and approval in the pipelines' section 4 rate proceedings. These costs are permitted, if prudent, irrespective of whether the services are performed on their own production or on gas purchased from producers.

D. Retroactive Effect of Rule

In Order No. 391, the Commission reaffirmed on a generic basis its prior policy developed in individual pipeline rate proceedings that retroactive repricing of pipeline production pursuant to *Mid-Louisiana* will not be permitted unless the pipeline specifically reserved the issue of NGPA rate treatment for its own production in applicable rate settlements.[8] National Fuel Gas Supply Corporation, Mid Louisiana Gas Company, and Kentucky West Virginia Gas Company, each of which is a pipeline producer, argue that a pipeline is entitled to reprice its own production in accordance with *Mid-Louisiana* notwithstanding any failure to reserve the repricing issue in prior rate settlements. Their arguments are restatements of arguments previously made in comments in response to the rulemaking notice in this proceeding and rejected in Order No. 391. The Commission has reviewed the requests for rehearing and finds that no facts or arguments have been presented which would warrant any changes in the policy governing retroactive application of *Mid-Louisiana*.[9]

National Fuel also seeks rehearing of the provisions of the rule requiring the application of NGPA regulations to pipeline production.[10] National Fuel argues that under Commission Order No. 58,[11] which continued NGA regulation of pipeline production, pipelines had no notice that they were expected to comply with NGPA regulations. Therefore, according to National Fuel, pipelines should be permitted to retroactively collect applicable NGPA prices without regard to the NGPA requirements or the Commission should, at a minimum, grant a blanket waiver of these NGPA requirements. The Commission in Order No. 391 considered and rejected the suggestion of a blanket waiver and adopted instead a case-by-case determination.[12] The Commission is of the opinion that the terms of the rule on this point are adequate to assure that pipeline producers will be treated equitably. National Fuel has not presented any new facts that would warrant a change in this policy.

E. Inclusion of Cost-of-Service Production in PGA Filings

Order No. 391 provides that costs associated with pipeline production priced on a cost-of-service basis cannot be included in the pipeline's PGA filing and must instead be included along with other costs in the pipeline's general rate filings under section 4 of the NGA. El Paso Natural Gas Company argues that cost-of-service pipeline production should be permitted to be included in PGA filings and that to relegate such production to section 4 proceedings virtually insures that a pipeline will fail to recover fully the costs of production.

---

[5] Order No. 391, 49 FR 33849, 33855 (Aug. 27, 1984).

[6] 18 CFR 271.1104 (1984).

[7] *See* 18 CFR 2.102 (1984).

[8] Order No. 391, 49 FR 33849, 33855–56 (Aug. 27, 1984).

[9] The Commission notes that since the issuance of Order No. 391, the U.S. Court of Appeals for the Fourth Circuit, on September 24, 1984, issued its decision in Consolidated Gas Supply Corp. v. FERC, 745 F.2d 281 (4th Cir. 1984). In that case the court unanimously affirmed the Commission's policy on the issue of retroactive application of *Mid-Louisiana*. Several other cases involving this issue have been appealed and await decision. Arizona Electric Power Cooperative, Inc. V. FERC, D.C. Cir., No. 82–2172; Mid Louisiana Gas Company v. FERC, Fifth Cir., No. 82–4470; Kentucky West Virginia Gas Co. v. FERC, Fifth Cir., No. 82–4594; Kansas-Nebraska Natural Gas Co. v. FERC, Fifth Cir., No. 81–4116.

[10] Sellers are required to file an application with the appropriate jurisdictional agency for a well category determination in order to price gas under sections 102, 103, 107 or 108 of the NGPA. 18 CFR Part 274 (1984). In addition, sellers are permitted to collect the applicable NGPA prices, subject to refund, commencing on the date the application is filed. 18 CFR Part 273 (1984). The final rule required pipelines to file well category determinations with the jurisdictional agencies and maintained the date applicable to interim collections. This permitted a pipeline to receive the NGPA ceiling prices from the date an application for determination was filed with the jurisdictional agency. The Commission provided that in cases where a pipeline had not made the necessary filing for a well determination prior to *Mid-Louisiana*, it would consider waiving the requirements of these rules so as to permit a pipeline to collect the NGPA incentive prices retroactively, assuming the pipeline is otherwise entitled to such prices.

[11] Final Rule Governing the Maximum Lawful Price for Pipeline, Distributor or Affiliate Production, 44 FR 66577 (November 20, 1979). This order was vacated by the *Mid-Louisiana* decision.

[12] Order No. 391, 49 FR 33849, 33852 (Aug. 27, 1984).

The Commission finds El Paso's argument unpersuasive. As pointed out in Order No. 391, the PGA process is not designed to recover the actual costs associated with company-owned production but to track gas costs authorized by contract and subject to NGPA ceiling prices regardless of actual costs related thereto. Therefore, the PGA proceeding does not provide the information necessary to determine the reasonableness of a pipeline's cost-based production. In addition, El Paso has not provided any persuasive reason why costs associated with pipeline production cannot adequately be recovered by means of the section 4 rate procedure. The policy set forth in this rule represents no departure from the Commission's past practice. The pipeline is free to file a section 4 rate application if it believes its effective rates do not adequately cover its costs. El Paso has shown no facts which demonstrate that a generic exception should be made for the particular costs involved in a pipeline's gas production operations.[13]

F. Incentive Prices

Order No. 391 provides that in determining whether a pipeline is entitled to the incentive price for its tight formation or production enhancement gas, the Commission will apply the NGPA's affiliated entities test. The New York Public Service Commission (New York) argues this provision of the rule is unreasonable and places pipeline producers in a position superior to that of independent producers. Instead, New York favors allowing retroactive incentive prices only in cases where a pipeline can demonstrate that the gas would not have been produced except in anticipation of receiving the incentive price. As to future production, New York would require the pipeline in its PGA proceeding to demonstrate on a well-by-well basis that any claimed incentive prices are necessary to render the production economic.

Specifically, New York argues that since the basis for the incentive prices is that they are necessary to insure production of high-cost gas, the pipeline should be required to make the showing of need. New York alleges that application of the affiliated entities test is inapposite. The fact that incentive prices were necessary for independent producers who have negotiated contracts authorizing such prices, does not, in its view, show that these incentive prices were also necessary for pipeline producers. New York further argues that it is unnecessary to permit pipeline production to be priced at the section 107(c)(5) rate retroactively since a pipeline's actual production of potentially eligible gas at non-incentive prices proves that the incentive price was unnecessary.

Pipelines do not contract with themselves for their own production and therefore the negotiated price requirement cannot be met by pipelines. As a substitute standard, the Commission adopted the affiliated entities test. Under this test, if independent producers have been permitted to collect incentive prices for certain types of production, the pipeline *may* be eligible to collect incentive prices for similar types of production. Whether a pipeline will be entitled to an incentive price will depend on the circumstances of each particular situation. The Commission cannot at this time specify how the affiliated entities test should be applied in each specific case, but a pipeline should receive the incentive price only if the evidence in a particular case supports the conclusion that in the event the pipeline's gas had been produced by an independent producer, that producer *would* in all likelihood have received the incentive price. The Commission believes this approach is reasonable and is preferable to New York's suggestion that a pipeline's eligibility be based on well-specific cost and related data to be submitted by the pipeline producer. In addition, the information required under New York's proposal is in excess of what is required of producers and has not been shown to be reasonable or necessary. Accordingly, New York's request for rehearing on this issue is denied.

G. Application of Rule to Blanket Certificate Regulations

Consolidated Gas Transmission Corporation requests the Commission, as a part of its implementation of *Mid-Louisiana*, to amend § 157.209 of the regulations pertaining to natural gas eligible to be transported in interstate commerce under blanket certificates. Consolidated requests the Commission to remove from the existing regulation the limitation which precludes transportation of a pipeline's own production under blanket certificates.

The existing blanket certificate program authorizing transportation for any end-user is experimental and will expire on June 30, 1985.[14] The Commission has stated its intention to review the program at that time and make any modification found to be necessary.[15] Consolidated's request for modification of the blanket certificate regulations should be considered in connection with the Commission's review of the blanket certificate program rather than as a part of this rulemaking.

H. Method of Determining Applicable NGPA Prices

Phelps Dodge Corporation, Magma Copper Company, ASARCO, Inc., Inspiration Consolidated Copper Company, and Kennecott Corporation (jointly Phelps Dodge) request the Commission to clarify Order No. 391 with regard to the method to be used in determining NGPA prices applicable to pipeline production. Phelps Dodge argues that such prices must be determined on a well-by-well basis.[16]

The Commission intends that pricing of pipeline production under the NGPA should conform as nearly as possible to producer pricing under the NGPA. NGPA pricing is normally based on wells or well completions, and the Commission anticipates NGPA pricing of pipeline production will also be based on wells.

Phelps Dodge also argues that the intracompany operating statement required by Order No. 391 is inadequate. Phelps Dodge expresses the belief that a statement setting forth nonprice terms should be required for each well and that without such information it will be difficult and infeasible to apply the affiliated entities test. The Commission disagrees. In Order No. 391, the Commission declined to require statements for each well, but held that

[13] This does not preclude a pipeline from attempting to demonstrate on an individual basis in a section 4 rate proceeding the appropriateness of establishing a tracking mechanism to reflect changes in costs associated with pipeline production based on specific circumstances unique to their operations.

[14] Sales and Transportation by Interstate Pipelines and Distributors: Expansion of Categories of Activities Authorized Under Blanket Certificate, 48 FR 34,872 (Aug. 1, 1983) (Order No. 234-B).

[15] *See* Notice of Inquiry, Docket No. RM85-1-000, 50 FR 114 (Jan. 2, 1985). The Commission has proposed to extend the program through December 31, 1985, pending further review. 30 FERC ¶ 61,320 (1985).

[16] Phelps Dodge also requests the Commission to confirm the fact that possible retroactive application of NGPA prices to pipeline production and related issues arising under the rule should be determined in individual proceedings, and that those issues specifically related to possible retroactive repricing by El Paso should be determined in El Paso's pending proceeding in Docket No. TA82-2-33, *et al.* The Commission agrees with Phelps Dodge that the determination of retroactive NGPA pricing for specific pipelines must be made in individual proceedings, and that the proceeding in Docket No. TA82-2-33, *et al.* is the proper forum for determination of issues involving possible retroactive pricing by El Paso. *See* El Paso Natural Gas Co., 29 FERC ¶ 61,133 (1984).

the operating statement must nevertheless contain sufficient information, including a description of non-price terms, as is necessary to apply the affiliated entities test.[17] Phelps Dodge has not presented any new facts or arguments which would warrant modifying the requirements established in Order No. 391. If experience under the rule demonstrates the need for more specific information concerning a pipeline's production operations, the matter will be reconsidered and if necessary the requirements of the operating statements will be revised.

I. Determination of Section 104 Price for Pipeline Production Previously Priced on Cost-of-Service Basis

Phillips Petroleum Company and Phillips Oil Company (jointly Phillips) request rehearing of the provisions of Order No. 391 establishing prices under section 104 of the NGPA for pipeline production previously priced on a cost-of-service basis. Under the rule, pipelines are entitled to the same, ceiling prices under section 104 as independent producers. Phillips argues that pipeline production previously priced on a cost-of-service basis has a different maximum lawful price under section 104. Section 104 provides that the maximum lawful price is the higher of the just and reasonable rate in effect on April 20, 1977, as adjusted for inflation pursuant to section 101(a) of the NGPA (section 104(b)(1)(A)), or "any just and reasonable rate which was established by the Commission after April 10, 1977 and before the date of enactment of this Act . . ." (section 104(b)(1)(B)). For producers, and for pipeline production based on producer ceiling prices, the rate in effect on April 20, 1977, was an applicable area or national rate previously established by the FPC. However, Phillips notes that as to pipeline production priced on a cost-of-service basis as of April 20, 1977, a just and reasonable rate was also established, namely the cost-of-service rate converted to a Btu basis. According to Phillips, the applicable rate for such production under section 104 is the April 20, 1977 cost-of-service rate per MMBtu plus the section 101(a) inflation adjustments.[18] Since the cost-of-service rates for pipeline production were in most cases lower than the rates allowed producers for equivalent production, the resulting ceilings advocated by Phillips would normally be below the applicable section 104 ceiling prices approved by the Commission in this rule. Phillips appears to argue that this aspect of the rule is unduly favorable to pipeline producers.

Phillips' position would not permit a pipeline to receive the same section 104 rate that a producer would receive. Gas produced by an independent producer that was committed or dedicated to the interstate market before the date of enactment of the NGPA for which a just and reasonable rate was in effect qualifies for the section 104 rate. The Commission blieves the *Mid-Louisiana* decision requires parity treatment for producer and pipeline production. To achieve this result the Commission believes that pipeline production previously priced on a cost-of-service basis must be permitted to receive the section 104 NGPA ceiling prices. Therefore Phillips' request for rehearing is denied.

In consideration of the foregoing, the Commission orders:

The requests for rehearing of Order No. 391 are denied.

By the Commission.

Kenneth F. Plumb,

Secretary.

[FR Doc. 85-8802 Filed 4-11-85; 8:45 am]

BILLING CODE 6717-01-M

[17] Order No. 391, 49 FR 33849, 33853 (Aug. 27, 1984).

[18] A similar argument is made by AEPCO. See AEPCO's request for rehearing, p. 3.

---

18 CFR Part 271

[Docket No. RM79-76-236; Texas-9 Addition VI; Order No. 414]

High-Cost Gas Produced From Tight Formations; Texas

Issued: April 10, 1985.

AGENCY: Federal Energy Regulatory Commission, DOE.

ACTION: Final rule.

SUMMARY: The Federal Energy Regulatory Commission is authorized by section 107(c)(5) of the Natural Gas Policy Act of 1978 to designate certain types of natural gas as high-cost gas where the Commission determines that the gas is produced under conditions which present extraordinary risks or costs. Under section 107(c)(5), the Commission issued a final regulation designating natural gas produced from tight formations as high-cost gas which may receive an incentive price (18 CFR 271.703 (1984)). This rule established procedures for jurisdictional agencies to submit to the Commission recommendations of areas for designation as tight formations. This order adopts the recommendation of the Railroad Commission of the State of Texas that an additional specified area of the Travis Peak Formation, located in Nacogdoches and Rusk Counties, Texas, Railroad Commission District 6, be designated as a tight formation under § 271.703 of the Commission's Regulations.

EFFECTIVE DATE: This rule is effective May 10, 1985.

FOR FURTHER INFORMATION CONTACT: Edward G. Gingold, (202) 357-5491 or Walter W. Lawson (202) 357-8556.

SUPPLEMENTARY INFORMATION:

Before Commissioners: Raymond J. O'Connor, Chairman; Georgiana Sheldon, A. G. Sousa, Oliver G. Richard III and Charles G. Stalon.

The Commission amends § 271.703(d) of its regulations (18 CFR § 271.703(d) (1984)) to include an additional area of the Travis Peak Formation, located in Nacogdoches and Rusk Counties, Texas, Railroad Commission District 6, as a designated tight formation eligible for incentive pricing under § 271.703. The amendment was proposed in a Notice of Proposed Rulemaking by the Director, Office of Pipeline and Producer Regulation, issued November 8, 1984 (49 FR 45174, November 15, 1984)[1] based on a recommendation by the Railroad Commission of Texas (Texas) in accordance with § 271.703, that a specified area of the Travis Peak Formation located in Nacogdoches and Rusk Counties, Texas, Railroad Commission District 6, be designated as a tight formation.

Evidence submitted by Texas supports the assertion that the specified area of the Travis Peak Formation located in Nacogdoches and Rusk Counties, Texas, meets the guidelines contained in § 271.703(c)(2). The Commission adopts the Texas recommendation.

This amendment shall become effective May 10, 1985.

List of Subjects in 18 CFR Part 271

Natural gas, Incentive price, Tight formations.

In consideration of the foregoing, Part 271 of Subchapter H, Chapter I, Code of Federal Regulations, is amended as set forth below.

By the Commission.

Kenneth F. Plumb,

Secretary.

PART 271—[AMENDED]

Section 271.703 is amended as follows:

1. The authority citation for Part 271 reads as follows:

[1] Comments on the proposed rule were invited and none were received. No party requested a public hearing and no hearing was held.

Authority: Department of Energy Organization Act, 42 U.S.C. 7101 *et seq.*; Natural Gas Policy Act of 1978, 15 U.S.C. 3301–3432; Administrative Procedure Act, 5 U.S.C. 553.

2. Section 271.703 is amended by adding paragraph (d)(36)(vi) to read as follows:

§ 271.703 Tight Formations.

* * * * *

(d) *Designated tight formations.* * * *

(36) *Travis Peak Formation in Texas. FM79–76 (Texas–9).* * * *

(vi) *Toolan (Travis Peak) Field.*

(A) *Delineation of formation.* The designated portion of the Travis Peak Formation consists of all or part of the surveys located in the Toolan Field, in portions of Nacogdoches and Rusk Counties, Texas, specifically the area encompassed by a 2.5 mile radius around Hill International Production Company's E. J. Edwards, *et al.*, No. 1 well, located approximately one mile southwest of the town of Garrison, Texas, Francis Kellett Survey, Abstract 329.

(B) *Depth.* These Travis Peak sands are found in the interval ±7,100 feet subsea to ±9,200 feet subsea, or from the base of the Pettit to the top of the Cotton Valley intervals.

* * * * *

[FR Doc. 85–8803 Filed 4–11–85; 8:45 am]

BILLING CODE 6717-01-M

DEPARTMENT OF STATE

22 CFR Part 2

[Departmental Regulation 108.841]

Duration of Protection for United States Representative to the United Nations

AGENCY: Office of the Under Secretary for Management, Department of State.

ACTION: Final rule.

SUMMARY: The Department of State, by this regulation, authorizes security officers designated under 22 CFR 2.1 to provide protection to the departing United States Representative to the United Nations. The purpose of the regulation is to clarify the continuity of protection for that officer.

The regulation limits authorization to a maximum of 30 days.

A successor to the United States Representative has been designated and the incumbent's resignation is effective at the end of April 1, 1985. This presents an immediate emergency situation to which this regulation responds, making it impracticable to follow the procedures of Executive Order 12291 (46 FR 34263) (exemption 8(a)(1)). Similarly, on the basis of the present emergency, the Department finds that notice and public procedure on this regulation are impracticable and contrary to the public interest. Because of the importance of the protection of the departing Representative of the United States to the United Nations to the conduct of foreign relations, the Department also finds that this regulation involves a foreign affairs function of the United States.

DATE: This regulation is effective April 1, 1985.

ADDRESS: Send written comments to: The Assistant Legal Adviser for Management, Department of State, Washington, D.C. 20520.

FOR FURTHER INFORMATION CONTACT: K.E. Malmborg, Assistant Legal Adviser for Management, (202) 632–2350.

SUPPLEMENTARY INFORMATION: As required by 22 U.S.C. 2666, this regulation has been transmitted, prior to its effective date, to the Speaker of the House of Representatives and the Chairman of the Senate Foreign Relations Committee.

List of Subjects in 22 CFR Part 2

Foreign officials, Security measures.

Accordingly, 22 CFR 2.1 is amended by adding at the end thereof the new paragraph (c) set forth below:

PART 2—[AMENDED]

§ 2.1 [Amended]

* * * * *

(c) When the Under Secretary of State for Management determines that it is necessary, persons designated under paragraph (a) of this section shall be authorized to provide protection to a departing United States Representative to the United Nations. In providing such protection, they are authorized to exercise the authorities described in paragraphs (1) and (2) of paragraph (a) of this section. Such protection shall be for the period or periods determined necessary by the Under Secretary of State for Management, except that the period of protection under this paragraph shall in no event exceed 30 calendar days from the date of termination of that individual's incumbency as United States Representative to the United Nations.

Dated: April 1, 1985.

Ronald I. Spiers,

Under Secretary for Management.

[FR Doc. 85–8685 Filed 4–11–85; 8:45 am]

BILLING CODE 4710-10-M

DEPARTMENT OF HOUSING AND URBAN DEVELOPMENT

Office of the Assistant Secretary for Housing—Federal Housing Commissioner

24 CFR Parts 203 and 204

[Docket No. R-85-965; FR-1415]

Withdrawal of Final Rule for the TMAP Program

Correction

In FR Doc. 85–7356 appearing on page 12527 in the issue of Friday, March 29, 1985, make the following correction: In the second column, in the **SUPPLEMENTARY INFORMATION** in the fourteenth line, "1984" should read "1985".

BILLING CODE 1505-01-M

NAVAJO AND HOPI INDIAN RELOCATION COMMISSION

25 CFR Part 700

Commission Operations and Relocation Procedures; Notice of Final Date for Voluntary Relocation Application

AGENCY: Navajo and Hopi Indian Relocation Commission.

ACTION: Final rule.

SUMMARY: This notice establishes final rules regarding Notice of Final Date for Voluntary Relocation Application. This action is necessary to respond to the Fiscal Year 1985 Interior Appropriations Bill, Pub. L. 98–473, which contains language establishing July 7, 1985, as a deadline for receipt of applications for voluntary relocation.

EFFECTIVE DATE: May 13, 1985.

ADDRESS: Comments may be sent to the Navajo and Hopi Indian Relocation Commission, P.O. Box KK, Flagstaff, AZ 86002.

FOR FURTHER INFORMATION CONTACT: Paul M. Tessler, CFR Liaison Officer, Navajo and Hopi Indian Relocation Commission, P.O. Box KK, Flagstaff, AZ 86002, Telephone (602) 779–2721.

SUPPLEMENTARY INFORMATION: The Fiscal Year 1985 Interior Appropriations Bill, Pub. L. 98–473, contains language establishing July 7, 1985 as a deadline for receipt of applications for voluntary relocation. The Conference Report also contained the following explanatory language:

Language is included in the bill to establish July 7, 1985 as deadline for receipt of

applications for voluntary relocation instead of June 30, 1985 as proposed by the Senate.

The managers agree that benefits for voluntary relocation shall be available only to those households or individuals who have filed an application with the Commission on or prior to July 7, 1985.

With respect to "involuntary relocatees", the managers believe that it is the responsibility of the Commission to notify those individuals eligible for relocation of the change in the date for applications. After July 7, 1985, those people who have not applied cannot be considered uninformed and therefore are "involuntary relocatees" if they have not made the effort to apply for relocation with the Commission.

In order to implement these provisions, the Commission has adopted regulations which provide for notice to applicants, filing of applications, and defining involuntary relocation.

Comment was received from the Navajo Tribe regarding the use of the term "involuntary relocatee." The Tribe stated that the term was offensive and labeled people as lawbreakers. The Navajo-Hopi Legal Services Program also commented on this term stating that the use of the term may constitute a violation of the U.S. Constitution. The Commission has removed the term "involuntary relocatee" from the Final Rule.

The proposed rule suggested the removal of § 700.139, Referral for Action. Comment was received that the section remain in the Final Rule. This comment has been incorporated into the Final Rule thus, § 700.139 will remain in the regulations. Regarding § 700.139, the option to exercise the referral for action may be taken at a date which shall be five years after the date of approval of the Report and Plan by the Congress. This is consistent with Pub. L. 93-531 and the Report and Plan.

Finally, the date July 8, 1985 (Monday) is established as the final date that applications can be received rather than July 7, 1985 which is a Sunday.

The principal author of this proposed rulemaking is E. Susan Crystal, Attorney-at-Law, of the Navajo and Hopi Indian Relocation Commission.

List of Subjects in 25 CFR Part 700

Administrative practice and procedure, Conflicts of interests, Freedom of Information, Grant program-Indians, Indian-claims, Privacy, Real property acquisition, Relocation Assistance.

Authority: 25 U.S.C. 640d, Pub. L. 93-531, 25 U.S.C. 640d-14, Pub. L. 96-305.

PART 700—[AMENDED]

Accordingly, the Commission amends Subpart C, by revising § 700.137, and adding § 700.138, *Persons who have not applied for voluntary relocation by July 8, 1985 as follows.* (Section 700.139 remains unchanged.):

§ 700.137 Notice of final date for voluntary relocation application.

(a) *General.* Persons identified by the Commission as potentially subject to relocation who have not applied for relocation assistance shall be contacted by the Commission as soon as practicable following the final publication of this rule and informed of the deadline for application for voluntary relocation benefits.

(b) In order to be considered for voluntary relocation assistance benefits, an applicant must have filed a completed application form with the Commission by close of business on July 8, 1985.

§ 700.138 Persons who have not applied for voluntary relocation by July 8, 1985.

(a) Pursuant to 25 U.S.C. 640d-14(d)(3), heads of households who do not make timely arrangements for relocation by filing an application by July 8, 1985, shall be provided a replacement home by the Commission. To be eligible for benefits (Housing and Moving Expenses), such persons must be domiciled on July 8, 1985, on land partitioned to a tribe of which they are not members; and they must also otherwise meet all other current eligibility criteria.

(b) The Commission shall utilize amounts payable with respect to such households pursuant to 25 U.S.C. 640d-14(b)(2) and 25 U.S.C. 640d-14(a) for the construction or acquisition of a home and related facilities for such households.

(c) Persons identified by the Commission as potentially subject to relocation who have not applied for relocation assistance by July 8, 1985, shall be contacted by the Commission as soon as practicable. At such time, the Commission shall—(1) request that the head of household choose an available area for relocation, and contract with the Commission for relocation; and (2) offer the relocatee suitable housing; and (3) offer to purchase from the head of household the habitations and improvements; and (4) offer provisions for the head of household and his family to be moved (e.g., moving expense, etc.).

Ralph A. Watkins, Jr.,

Chairman, Navajo-Hopi Relocation Commission.

[FR Doc. 85-8785 Filed 4-11-85; 8:45 am]

BILLING CODE 7560-01-M

DEPARTMENT OF THE TREASURY

Bureau of Alcohol, Tobacco and Firearms

27 CFR Parts 47 and 178

[T.D. ATF-202]

Importation of Firearms and Other Miscellaneous Amendments Relating to Firearms and Ammunition

AGENCY: The Bureau of Alcohol, Tobacco and Firearms (ATF), Department of the Treasury.

ACTION: Final rule (Treasury decision).

SUMMARY: This final rule implements a provision of the Trade and Tariff Act of 1984 pertaining to the importation of certain firearms classified as curios or relics. It also removes from the regulations, or redesignates, the penalty, seizure, and forfeiture provisions in Subpart J of 27 CFR Part 178 relative to firearms and ammunition.

DATE: This final rule is effective on April 12, 1985.

FOR FURTHER INFORMATION CONTACT: Daniel E. Crowley, ATF Specialist, Firearms and Explosives Operations Branch, Bureau of Alcohol, Tobacco and Firearms, 1200 Pennsylvania Avenue, NW, Washington, DC 20226 (202-566-7591).

SUPPLEMENTARY INFORMATION: This final rule implements § 233 of the Trade and Tariff Act of 1984 (Pub. L. 98-573, 98 Stat. 2991). This section of the Act amended § 925 of Chapter 44 of Title 18 United States Code (18 U.S.C. Chapter 44), by adding a new paragraph (e). Under this paragraph, the importation by a licensed importer of all rifles and shotguns listed by the Director as curios or relics, and all handguns listed by the Director as curios or relics that are generally recognized as particularly suitable for or readily adaptable to sporting purposes, is allowed notwithstanding any other provision of Title 18.

Under the amendment, a licensed importer may import rifles, shotguns, or handguns listed as curios or relics notwithstanding the 18 U.S.C. 925(d)(3) prohibition on importation of surplus military firearms. However, the importation of curio or relic handguns is subject to the same sporting purposes criterion specified in 18 U.S.C. 925(d)(3). Therefore, non-sporting handguns, including surplus military non-sporting handguns, remain nonimportable.

The amendment, however, does not in any way affect other U.S.C. titles containing provisions concerning the importation of firearms. For example,

the provisions in Title 22 relative to the importation of arms, ammunition, and implements of war under section 38 of the Arms Export Control Act (Pub. L. 92-239, as amended, 90 Stat. 744, 22 U.S.C. 2778) continue to be operative with respect to the importation of firearms listed as curios or relics. This is also true for the provisions in Title 26 relating to the importation of firearms within the purview of Chapter 53 of the Internal Revenue Code of 1954 (26 U.S.C. Chapter 53), i.e., National Firearms Act weapons.

The final rule also revises the regulations in Subpart J of Part 178 of Title 27, Code of Federal Regulations (27 CFR Part 178, Subpart J). The regulations in 27 CFR Part 178 implement the provisions of Chapter 44 of Title 18, U.S.C. Subpart J of that part contains the penalty, seizure, and forfeiture provisions pertaining to firearms and ammunition. The penalty provisions in this subpart are simply restatements of statutes concerning certain crimes and punishments. Moreover, because of their nature, no regulatory action is required for the implementation of these statutes. Since these provisions are adequately covered in the law, there is no need to restate them in Subpart J. Furthermore, the major purpose of the regulations in 27 CFR Part 178 is to provide procedural and substantive requirements relative to the operations of persons licensed to engage in the firearms and ammunition business. The restating of criminal statutes, however, does not further this purpose.

The following summarizes the more substantive changes made to the regulations by this final rule.

A. Importation of Firearms

To effectuate the amendment to the law enacted by § 233 of the Trade and Tariff Act, the regulations in 27 CFR Part 178 are amended by adding § 178.118. This section allows a licensed importer to bring in all rifles and shotguns classified by the Director as curios or relics, and all handguns classified by the Director as curios or relics that are determined to be generally recognized as particularly suitable for or readily adaptable to sporting purposes, including surplus military firearms. Moreover, it is provided that the firearms must be imported in accordance with the applicable importation provisions of 27 CFR Part 178 and the importation provisions of 27 CFR Part 47. Furthermore, curios or relics which fall within the definition of "firearm" under 26 U.S.C. 5845(a) are required to also meet the importation provisions of 27 CFR Part 179 before they may be imported.

As discussed, the regulations in 27 CFR Part 47 concern the importation of arms, ammunition, and implements of war, and implement § 38 of the Arms Export Control Act. Except for shotguns with barrels 18 inches or more in length, all importations of firearms are subject to the import controls of 27 CFR Part 47. ATF reviewed these regulations for their impact on the importation of curio or relic firearms and concluded that certain provisions in 27 CFR Part 47 that hindered the importation of such firearms (e.g. § 47.52) could be amended consistent with Section 38 of the Arms Export Control Act.

In carrying out the import functions of § 38 of the Arms Export Control Act, ATF is directed by section 1(*1*)(2) of Executive Order 11958 (42 FR 4311) to consult with the Department of State. After consultation with the Department of State, and with their concurrence, the provisions of 27 CFR Part 47 have been revised. This revision in no way diminishes the foreign policy and national security requirements implemented by these regulations. The following summarizes why and how these regulations are amended.

1. Under § 47.52, the importation of an article on the Import List proscribed in § 47.21 is prohibited if the article originates in certain countries or areas. In administering this section, an article that was manufactured in, or has recently been in, a proscribed country or area, was considered to have originated in that country or area.

ATF recognized that this position could preclude the importation of many firearms listed as curios or relics. After evaluating the issue, it was concluded that curio or relic firearms manufactured in a proscribed country or area prior to the country or area becoming proscribed need not be considered as having originated in a proscribed country or area. This conclusion was also made for curio or relic firearms manufactured in a non-proscribed country or area which have been in a proscribed country or area. To avoid giving a proscribed country or area an advantage, it was further determined that the curio or relic firearms must have been stored in a non-proscribed country or area for the five year period immediately prior to importation. Section 47.52 is revised by adding paragraphs (d) and (e) to reflect this position.

Under paragraph (d), an application for a permit to import articles (firearms) that were manufactured in, or have been in, a country or area proscribed under § 47.52 may be approved where the articles are covered by Category I(a) of the Import List (other than those subject to 27 CFR Part 179), are importable as curios or relics under 27 CFR 178.118, and meet certain specified criteria. The articles must have been manufactured in a proscribed country or area prior to the date the country or area became proscribed or must have been manufactured in a non-proscribed country or area. The articles must also have been stored in a non-proscribed country or area for the five year period immediately prior to importation. However, regardless of where they have been stored, curio or relic firearms manufactured in a country or area after the country or area became proscribed may not be imported. Moreover, this paragraph does not apply to curio or relic firearms subject to the provisions of 27 CFR Part 179.

To import the firearms, the person applying for the permit is required by paragraph (e) to certify as to how the firearms meet the criteria specified in paragraph (d). The certification statement is required to be prepared in letter form, executed under the penalties of perjury, and submitted to the Director at the time application is made for the import permit. The certification statement must be accompanied by documentary information on the country or area of manufacture and on the country or area of storage for the five year period immediately prior to importation. Such information may consist of any document that the applicant believes substantiates the date and place of manufacture and the place of storage. The Director, however, reserves the right to determine whether the documentation is acceptable and to require additional documentation.

2. In connection with the above amendment, the term "executed under the penalties of perjury" is defined.

B. Miscellaneous Amendments Relating to Firearms

The penalty provisions in Subpart J of 27 CFR Part 178 pertaining to the criminal misuse of firearms and to the receipt, possession, or transportation of firearms by a felon or other proscribed person, or by an employee of any such person, are removed from the regulations. The remaining penalty provision and the seizure and forfeiture provision are transferred to other locations within 27 CFR Part 178, i.e., redesignated, and Subpart J is reserved. The penalty provision for a false statement or representation and the seizure and forfeiture provision are redesignated as § 178.128 and as § 178.149, respectively.

Administrative Procedure Act

This amendment made by this final rule concerning the importation of curio or relic firearms merely conforms the regulations in 27 CFR Part 178 to an amendment of law. Moreover, since they constitute rules of agency procedure and practice, the revisions made to Subpart J of 27 CFR Part 178 fall within a recognized exception to the rulemaking provisions of 5 U.S.C. 553. In addition, the amendments made to 27 CFR Part 47 are excepted from the rulemaking provisions of 5 U.S.C. 553 because these regulations involve a foreign affairs function of the United States. For these reasons, and in view of the fact that the amendment to the law was effective November 14, 1984, ATF has determined that it is impractical, unnecessary and contrary to the public interest to issue this rule with notice and public procedure under 5 U.S.C. 553(b) or subject to the effective date limitation of 5 U.S.C. 553(d).

Regulatory Flexibility Act

Because a notice of proposed rulemaking is not required for this rule under 5 U.S.C. 553(b), the provisions of the Regulatory Flexibility Act (Pub. L. 96-354, 94 Stat. 1165, 5 U.S.C. 601 et seq.) relating to the preparation of a regulatory flexibility analysis are not applicable to this final rule.

Executive Order 12291

This final rule in not a "major rule" within the meaning of section 1(b) of Executive Order 12291 on Federal Regulations issued February 17, 1981 (46 FR 13193). This rule is not major because it will not result in (a) an annual effect on the economy of $100 million or more; (b) a major increase in costs or prices for consumers, individual industries, or Federal, State, or local government agencies, or geographic regions; or (c) significant adverse effects on competition, employment, investment, productivity, innnovation, or on the ability of United States-based enterprises to compete with foreign-based enterprises in domestic or export markets. Accordingly, this rule is not subject to the requirement for a regulatory impact analysis.

In addition, the Office of Management and Budget (OMB) has granted ATF a waiver from the review procedures of the Executive Order. This final rule was reviewed by OMB in accordance with the terms and conditions of that waiver. Any comments from OMB to ATF and any ATF response to those comments are available for public inspection during normal business hours at the: ATF Reading Room, Office of Public Affairs and Disclosure, Room 4407, Federal Office Building, 1200 Pennsylvania Avenue NW, Washington, DC.

Paperwork Reduction Act

The information collection requirements contained in this rule have been approved by the Office of Management and Budget pursuant to 3507 of the Paperwork Reduction Act of 1980 (OMB Control No. 1512-0017).

Right To Petition for Amendment of the Rule

Under 5 U.S.C. 553(e), any interested person may petition for the amendment of a rule. A petition must set forth the section or sections of the regulations involved and provide reasons for the requested action. Since it is particularly helpful in evaluating whether additional rulemaking is needed, the factual basis supporting the requested action should be provided in the petition. Any petition received will be carefully evaluated and, if further action is found to be appropriate, rulemaking proceedings will be initiated. After evaluation, ATF will notify the petitioner of the action taken or to be taken on the petition. The address for submitting a petition is: Director, Bureau of Alcohol, Tobacco and Firearms, P.O. Box 189, Washington, DC 20044, (ATTN: C:F:F, T.D. AFT-202).

The following list of **Federal Register** Thesaurus of Indexing Terms apply to this final rule:

List of Subjects

27 CFR Part 47

Administrative practice and procedure, Arms control, Arms and munitions, Authority delegations, Chemicals, Customs duties and inspection, Imports, Penalties, Reporting requirements, Scientific equipment, and seizures and forfeitures.

27 CFR Part 178

Administrative practice and procedure, Arms and munitions, Authority delegations, Customs duties and inspection, Exports, Imports, Military personnel, Penalties, Reporting requirements, Research, Seizures and forfeitures, and Transportation.

Drafting Information

The principal author of this rule is J. R. Whitley, ATF Tax Specialist, Compliance Operations, Bureau of Alcohol, Tobacco and Firearms, 1200 Pennsylvania Avenue, NW, Washington, DC 20226 (202-566-7531).

Authority

Accordingly, under the authority contained in 22 U.S.C. 2778 (90 Stat. 744) and 18 U.S.C. 926 (82 Stat. 234), the Director amends Title 27, Code of Federal Regulations.

PART 47—IMPORTATION OF ARMS, AMMUNITION AND IMPLEMENTS OF WAR

Section A. Part 27 is amended as follows:

§ 47.11 [Amended]

Paragraph 1. Section 47.11 is amended by adding the definition "Executed under the penalties of perjury", reading as follows:

* * * * *

Executed under the penalties of perjury. Signed with the prescribed declaration under the penalties of perjury as provided on or with respect to the application, form, or other document or, where no form of declaration is prescribed, with the declaration: "I declare under the penalties of perjury that this —— (insert type of document such as statement, certificate, application, or other document), including the documents submitted in support thereof, has been examined by me and, to best of my knowledge and belief, is true, correct, and complete."

* * * * *

Par. 2. Section 47.52 is amended by adding paragraphs (d) and (e) to read as follows:

§ 47.52 Import restrictions applicable to certain countries.

* * * * *

(d) Applications for permits to import articles that were manufactured in, or have been in, a country or area proscribed under this section may be approved where the articles are covered by Category I(a) of the Import List (other than those subject to the provisions of 27 CFR Part 179), are importable as curios or relics under the provisions of 27 CFR 178.118, and meet the following criteria:

(1) The articles were manufactured in a proscribed country or area prior to the date, as established by the Department of State, the country or area became proscribed, or, were manufactured in a non-proscribed country or area; and

(2) The articles have been stored for the five year period immediately prior to importation in a non-proscribed country or area.

(e) Applicants desiring to import

articles claimed to meet the criteria specified in paragraph (d) of this section shall explain, and certify to, how the firearms meet the criteria. The certification statement will be prepared in letter form, executed under the penalties of perjury, and submitted to the Director at the time application is made for an import permit. The certification statement must be accompanied by documentary information on the country or area of original manufacture and on the country or area of storage for the five year period immediately prior to importation. Such information may, for example, include a verifiable statement in the English language of a government official or any other person having knowledge of the date and place of manufacture and/or the place of storage; a warehouse receipt or other document which provides the required history of storage; and any other document that the applicant believes substantiates the place and date of manufacture and the place of storage. The Director, however, reserves the right to determine whether documentation is acceptable. Applicants shall, when required by the Director, furnish additional documentation as may be necessary to determine whether an import permit application should be approved.

Section B. Part 178 is amended as follows:

PART 178—COMMERCE IN FIREARMS AND AMMUNITION

Paragraph 1. The table of sections is amended as follows:

* * * * *

178.118 Importation of certain firearms classified as curios or relics.

* * * * *

178.128 False statement or representation.

* * * * *

Subpart I—Exemptions, Seizures, and Forfeitures

* * * * *

178.149 Seizures and forfeitures.

* * * * *

Subpart J—[Reserved]

* * * * *

Par. 2. Section 178.118 is added reading as follows:

§ 178.118 Importation of certain firearms classified as curios or relics.

Notwithstanding any other provision of this part, a licensed importer may import all rifles and shotguns classified by the Director as curios or relics, and all handguns classified by the Director as curios or relics that are determined to be generally recognized as particularly suitable for or readily adaptable to sporting purposes. The importation of such curio or relic firearms must be in accordance with the applicable importation provisions of this part and the importation provisions of 27 CFR Part 47. Curios or relics which fall within the definition of "firearm" under 26 U.S.C. 5845(a) must also meet the importation provisions of 27 CFR Part 179 before they may be imported.

Par. 3. Section 178.128 is added reading as follows:

§ 178.128 False statement or representation.

Any person who knowingly makes any false statement or representation with respect to any information required by the provisions of the Act or this part to be kept in the records of a person engaged in the firearms or ammunition business, or in applying for any license, exemption, or relief from disability, under the provisions of the Act, shall be fined not more than $5,000 or imprisoned not more than five years, or both.

Par. 4. Subpart I is amended by revising the heading for the subpart and by adding § 178.149 to read as follows:

* * * * *

Subpart I—Exemptions, Seizures, and Forfeitures

* * * * *

§ 178.149 Seizure and forfeiture.

Any firearm or ammunition involved in, or used or intended to be used in, any violation of the provisions of the Act or of this part, or in violation of any other criminal law of the United States, shall be subject to seizure and forfeiture. The provisions of Title 26, U.S.C., relating to the seizure, forfeiture, and disposition of firearms, as defined in section 5845(a) of that title, shall, so far as applicable, extend to seizures and forfeitures under the provisions of the Act.

§§ 178.161—178.166 (Subpart J) [Removed and reserved]

Par. 5. Subpart J is removed and reserved.

Signed: February 8, 1985.

Stephen E. Higgins,

Director.

Approved March 27, 1985.

John M. Walker, Jr.,

Assistant Secretary (Enforcement and Operations).

[FR Doc. 85-8947 Filed 4-11-85; 8:45 am]

BILLING CODE 4810-31-M

DEPARTMENT OF DEFENSE

Office of the Secretary

32 CFR Part 78

[DoD Directive 1332.xx]

Voluntary State Tax Withholding From Retired Pay; Correction

AGENCY: Defense.

ACTION: Interim rule; correction.

SUMMARY: This document corrects an interim rule that appeared on page 12249 in the **Federal Register** on Thursday, March 28, 1985 (50 FR 12249). This action is necessary to include a new "§ 78.5" and renumber the presently printed "§ 78.5."

FOR FURTHER INFORMATION CONTACT: Mr. James Jaskinski, telephone 202-697-0536.

List of Subjects in 32 CFR Part 78

Military personnel, Intergovernmental relations.

Accordingly, the following corrections are made to the proposed new Part 78 as follows:

PART 78—[AMENDED]

1. The authority citation for 32 Part 78 remains unchanged to read:

Authority: 10 U.S.C. 1045.

2. Change the heading "§ 78.5" in column three on page 12250 to read "§ 78.6"

3. Add a new "§ 78.5" to read as follows"

§ 78.5 Responsibilities.

(a) The *Assistant Secretary of Defense (Comptroller)* shall establish policy and procedures, provide guidance, coordinate changes with the Uniformed Services, sign and administer the agreements with States, and monitor the implementation of this part.

(b) The *Secretaries of the Military Departments* and the *Heads of the Other Uniformed Services* shall implement this part.

Patricia H. Means,

OSD Federal Register Liaison Officer, Department of Defense.

April 9, 1985.

[FR Doc. 85-8791 Filed 4-11-85; 8:45 am]

BILLING CODE 3810-01-M

Department of the Navy

32 CFR Part 706

Certifications and Exemptions Under the International Regulations for Preventing Collisions at Sea, 1972; Amendment

AGENCY: Department of the Navy, DOD.

ACTION: Final rule.

SUMMARY: The Department of the Navy is amending its certifications and exemptions under the International Regulations for Preventing Collisions at Sea, 1972 (72 COLREGS), to reflect that the Secretary of the Navy has determined that USS Germantown (LSD 42) is a vessel of the Navy which, due to its special construction and purpose, cannot comply fully with certain provisions of the 72 COLREGS without interfering with its special function as a naval dock landing ship. The intended effect of this rule is to warn marines in waters where 72 COLREGS apply.

EFFECTIVE DATE: March 29, 1985.

FOR FURTHER INFORMATION CONTACT: Captain Richard J. McCarthy, JAGC, U.S. Navy, Admiralty Counsel, Office of the Judge Advocate General, Navy Department, 200 Stovall Street, Alexandria, VA 22332-2400, Telephone number: (202) 325-9744.

SUPPLEMENTARY INFORMATION: Pursuant to the authority granted in 33 U.S.C. 1605 and Executive Order 11964, the Department of the Navy amends 32 CFR Part 706. This amendment provides notice that the Secretary of the Navy has certified that USS Germantown (LSD 42) is a vessel of the Navy which, due to its special construction and purpose, cannot comply fully with 72 COLREGS, Annex I, section 3(a), pertaining to the placement of the after masthead light and the horizontal distance between the forward and after masthead lights, without interfering with its special function as a Navy ship. The Secretary of the Navy has also certified that the aforementioned lights are located in closest possible compliance with the applicable 72 COLREGS requirements.

Moreover, it has been determined, in accordance with 32 CFR Parts 296 and 701, that publication of this amendment for public comment prior to adoption is impracticable, unnecessary, and contrary to public interest since it is based on technical findings that the placement of lights on this ship in a manner differently from that prescribed herein will adversely affect the ship's ability to perform its military functions.

List of Subjects in 32 CFR Part 706

Marine safety, Navigation (Water), Vessels.

PART 706—[AMENDED]

Accordingly, 32 CFR Part 706 is amended as follows:

§ 706.2 [Amended]

Table Five of § 706.2 is amended by adding the following Navy ship to the list of vessels therein to indicate the certifications issued by the Secretary of the Navy:

Vessel	Number	Forward masthead light not required; height above hull, Annex 1, sec. 2 (a)(i), (ii), (c), (d)	Aft masthead light less than 4.5 meters above forward masthead light, Annex 1, sec. 2(a)(ii)	Masthead lights not over all other lights and obstructions, Annex 1, sec. 2(f)	Vertical separation of masthead lights used when towing less than required by Annex 1, sec. 2(a)(i)	Aft masthead lights not visible over forward light 1,000 meters ahead of ship in all normal degrees of trim, Annex 1, sec. 2(b)	Forward masthead light not in forward quarter of ship, Annex 1, sec. 3(a)	After masthead light not less than ½ ship's length aft of forward masthead light, Annex 1, sec. 3(a)	Percentage horizontal separation attained
USS GERMANTOWN	LSD 42							x	65

Authority: Executive Order 11964; 33 U.S.C. 1605.

Dated: March 29, 1985.

James F. Goodrich,

Acting Secretary of the Navy.

Approved:

[FR Doc. 85-8763 Filed 4-11-85; 8:45 am]

BILLING CODE 3810-AE-M

32 CFR Part 706

Certifications and Exemptions Under the International Regulations for Preventing Collisions at Sea, 1972

AGENCY: Department of the Navy, DOD.

ACTION: Final rule.

SUMMARY: The Department of the Navy is amending its certifications and exemptions under the International Regulations for Preventing Collisions at Sea, 1972 (72 COLREGS), to reflect that the Secretary of the Navy has determined that USS South Carolina (CGN 37) is a vessel of the Navy which, due to its special construction and purpose, cannot comply fully with 72 COLREGS without interfering with its special function as a naval cruiser. The intended effect of this rule is to warn mariners in waters where 72 COLREGS apply.

EFFECTIVE DATE: March 29, 1985.

FOR FURTHER INFORMATION CONTACT: Captain Richard J. McCarthy, JAGC, U.S. Navy, Admiralty Counsel, Office of the Judge Advocate General, Navy Department, 200 Stovall Street, Alexandria, VA 22332-2400, Telephone number: (202) 325-9744.

SUPPLEMENTARY INFORMATION: Pursuant to the authority granted in 33 U.S.C. 1605 and Executive Order 11964, the Department of the Navy amends 32 CFR Part 706. This amendment provides notice that the Secretary of the Navy has certified that USS South Carolina (CGN 37) is a vessel of the Navy which, due to its special construction and purpose, cannot comply fully with 72 COLREGS; Annex I, section 3(a), pertaining to the location of the forward masthead light in the forward quarter of the ship, and Annex I, section 3(a), pertaining to the horizontal distance between the forward and aft masthead lights. Full compliance with the above-mentioned 72 COLREGS provisions would interfere with the special functions and purposes of the ship. The Secretary of the Navy has also certified that the above-mentioned lights are located in closest possible compliance with the applicable 72 COLREGS requirements.

Moreover, it has been determined, in accordance with 32 CFR Parts 296 and 701, that publication of this amendment for public comment prior to adoption is impracticable, unnecessary, and contrary to public interest since it is based on technical findings that the placement of lights on this ship in a manner differently from that prescribed herein will adversely affect the ship's ability to perform its military functions.

List of subjects in 32 CFR Part 706

Marine safety, Navigation (Water), and Vessels.

Accordingly, 32 CFR Part 706 is amended as follows:

PART 706—[AMENDED]

§ 706.2 [Amended]

Table Five of § 706.2 is amended by adding the following naval ship to the list of vessels therein to indicate the certifications issued by the Secretary of the Navy:

Vessel	Number	Forward masthead light not required, height above hull. Annex 1, sec. 2(a)(i), (ii), (c), (d)	Aft masthead light less than 4.5 meters above forward masthead light. Annex 1, sec. 2(a)(iii)	Masthead lights not over all other lights and obstructions. Annex 1, sec. 2(f)	Vertical separation of masthead lights used when towing less than required by Annex 1, sec. 2(a)(i)	Aft masthead lights not visible over forward light 1,000 meters ahead of ship in all normal degrees of trim. Annex 1, sec. 2(b)	Forward masthead light not in forward quarter of ship. Annex 1, sec. 3(a)	After masthead light not less than ½ ship's length aft of forward masthead light. Annex 1, sec. (3)(a)	Percentage horizontal separation attained
USS SOUTH CAROLINA	CGN 37						X	X	26.2

Authority: Executive Order 11964; 33 U.S.C. 1605.

Date: March 29, 1985.

Approved:

James F. Goodrich,

Acting Secretary of the Navy.

[FR Doc. 85-8762 Filed 4-11-85; 8:45 am]

BILLING CODE 3810-AE-M

---

32 CFR Part 706

Certifications and Exemptions Under the International Regulations for Preventing Collisions at Sea, 1972; Amendment

AGENCY: Department of the Navy, DOD.

ACTION: Final rule.

SUMMARY: The Department of the Navy is amending its certifications and exemptions under the International Regulations for Preventing Collisions at Sea, 1972 (72 COLREGS), to reflect that the Secretary of the Navy has determined that USS Texas (CGN 39) is a vessel of the Navy which, due to its special construction and purpose, cannot comply fully with 72 COLREGS without interfering with its special function as a naval cruiser. The intended effect of this rule is to warn mariners in waters where 72 COLREGS apply.

EFFECTIVE DATE: March 29, 1985.

FOR FURTHER INFORMATION CONTACT: Captain Richard J. McCarthy, JAGC, U.S. Navy, Admiralty Counsel, Office of the Judge Advocate General, Navy Department, 200 Stovall Street, Alexandria, VA 22332-2400, Telephone number: (202) 325-9744.

SUPPLEMENTARY INFORMATION: Pursuant to the authority granted in 33 U.S.C. 1605 and Executive Order 11964, the Department of the Navy amends 32 CFR Part 706. This amendment provides notice that the Secretary of the Navy has certified that USS Texas (CGN 39) is a vessel of the Navy which, due to its special construction and purpose, cannot comply fully with 72 COLREGS: Annex I, section 3(a), pertaining to the location of the forward masthead light in the forward quarter of the ship, and Annex I, section 3(a), pertaining to the horizontal distance between the forward and aft masthead lights. Full compliance with the above-mentioned 72 COLREGS provisions would interfere with the special functions and purposes of the ship. The Secretary of the Navy has also certified that the above-mentioned lights are located in closest possible compliance with the applicable 72 COLREGS requirements.

Moreover, it has been determined, in accordance with 32 CFR Parts 296 and 701, that publication of this amendment for public comment prior to adoption is impracticable, unnecessary, and contrary to public interest since it is based on technical findings that the placement of lights on this ship in a manner differently from that prescribed herein will adversely affect the ship's ability to perform its military functions.

List of Subjects in 32 CFR Part 706

Marine safety, Navigation (Water), and Vessels.

PART 706—[AMENDED]

Accordingly, 32 CFR Part 706 is amended as follows:

§ 706.2 [Amended]

1. Table Five of § 706.2 is amended by adding the following naval ship to the list of vessels therein to indicate the certifications issued by the Secretary of the Navy:

Vessel	Number	Forward masthead light less than the required height above hull. Annex 1, sec. 2(a) (i), (ii), (c), (d)	Aft masthead light less than 4.5 meters above forward masthead light. Annex 1, sec. 2(a)(iii)	Masthead lights not over all other lights and obstructions. Annex 1, sec. 2(f)	Vertical separation of masthead lights used when towing less than required by Annex 1, sec. 2(a)(i)	Aft masthead lights not visible over forward light 1,000 meters ahead of ship in all normal degrees of trim. Annex 1, sec. 2(b)	Forward masthead light not in forward quarter of ship. Annex 1, sec. 3(a)	After masthead light not less than ½ ship's length aft of forward masthead light. Annex 1, sec. (3)(a)	Percentage horizontal separation attained
USS TEXAS	CGN 39						x	x	13.3

Authority: Executive Order 11964; 33 U.S.C. 1605.

Dated: March 29, 1985.

Approved:

James F. Goodrich,

Acting Secretary of the Navy.

[FR Doc. 85-8764 Filed 4-11-85; 8:45 am]

BILLING CODE 3810-AE-M

GENERAL SERVICES ADMINISTRATION

41 CFR Ch. 201

[FIRMR Temp. Reg. 11]

Implementation of Public Laws 98-369 and 98-577 Regarding Competition in the Acquisition of Information Resources

Correction

In FR Doc. 85-7980 beginning on page 13319 in the issue of Thursday, April 4, 1985, make the following corrections:

Appendix A—[Corrected]

1. On page 13320, in the first column, the first line should read "FIRMR TEMPORARY REGULATION 11". The date immediately below should read "March 29, 1985".

2. On the same page, in the same column, in paragraph 5, in the second line, "froth" should read "forth".

3. On the same page, in the third column, in paragraph 17, in the fourth line, "establishment" should read "establishing".

4. On page 13325, in the third column, in § 201-24.210(a), in the first line, "and" should read "any".

5. On page 13327, in the middle column, in § 201-30.013-1, in the last line, "element" should read "elements".

6. On page 13329, in the third column, in § 201-39.006-4, add a comma after "Data" in the heading.

7. On page 13330, in the second column, in § 201-40.008(a)(3), in the eighteenth line, "consumer" should read "consumes".

8. On page 13331, in the second column, in § 201-40.008(d)(4), in the second line, insert "overall" between "lower" and "maintenance".

BILLING CODE 1505-01-M

FEDERAL COMMUNICATIONS COMMISSION

47 CFR Part 0

Reorganization of the Office of General Counsel

AGENCY: Federal Communications Commission.

ACTION: Final rule.

SUMMARY: This action amends the Commission's rules to reflect a reorganization in the Office of General Counsel. The Legal Counsel Division is renamed the Administrative Law Division. The three functional branches within the Legal Counsel Division (Mass Media, Common Carrier/Private Radio and Administrative Law) are abolished. This action is taken to simplify and improve management of the Office of General Counsel.

EFFECTIVE DATE: April 5, 1985.

FOR FURTHER INFORMATION CONTACT: Karl Brimmer, Management Planning and Program Evaluation Office (202) 632-3906.

SUPPLEMENTARY INFORMATION:

List of Subjects in 47 CFR Part 0

Organization and functions (Government agencies).

Order

In the matter of Amendment of Part 0 of the Commission's Rules to reflect a reorganization of the Office of General Counsel.

Adopted: April 2, 1985.
Released: April 5, 1985.
By the Managing Director:

1. The Commission, by the Managing Director, acting pursuant to delegated authority, has under consideration proposed changes in the organization of the Office of General Counsel, which would require amendment to section 0.42 of the Commission's Rules and Regulations.

2. In November 1984 the Commission approved the consolidation of essentially all its legislative functions into the Office of Congressional and Public Affairs. See FCC 84-642. This reorganization eliminated various legislative oversight functions from the Office of General Counsel. I am therefore approving an internal restructuring of the Office of General Counsel to reflect these changes in workload. Specifically, the Office's three functional branches (Mass Media, Common Carrier-Private Radio and Administrative Law), which had legislative responsibilities in their respective areas, are being abolished and the division's name is being changed back to "Administrative Law Division". The Administrative Law Division will, of course, retain all present functions of the Legal Counsel Division. Part 0 of the Commission's Rules and Regulations, which describes the agency's organization, is being amended to reflect these changes.

3. The amendments adopted herein pertain to agency organization. The prior public notice and comment procedures and effective date provisions of Section 4 of the Administrative Procedure Act, 5 U.S.C. 553, are therefore inapplicable. Authority for the amendments adopted herein is contained in Sections 4(i) and 5(b) of the Communications Act of 1934, as amended.

4. In view of the foregoing, it is ordered, effective April 5, 1985 that Part O of the Rules and Regulations is amended as set forth in the Appendix hereto.

Federal Communications Commission.

Edward J. Minkel,

Managing Director.

(Secs. 4, 303, 48 stat., as amended, 1066, 1082; 47 U.S.C. 154,303)

Appendix

PART 0—[AMENDED]

Part O of Chapter 1 of Title 47 of the Code of Federal Regulations is hereby amended as indicated below.

Section 0.42 is revised to read:

§ 0.42 Units in the Office.

The Office of General Counsel is structured into the following units:

(a) Immediate Office of the General Counsel
(b) Litigation Division
(c) Administrative Law Division
(d) Adjudication Division

[FR Doc. 85-8892 Filed 4-11-85; 8:45 am]

BILLING CODE 6712-01-M

47 CFR Parts 2 and 22

[Gen. Docket Nos. 80-183; RM-2365; RM-2750; RM-2047; RM-3068; FCC 85-139]

Allocation of Spectrum in the 928-941 MHz Band and To Establish Other Rules, Policies and Procedures for One-way Paging Stations the Domestic Land Mobile Service; Denial of Petition for Reconsideration

AGENCY: Federal Communication Commissions.

ACTION: Final rule; Denial of Petition for reconsideration.

SUMMARY: This action denies the Petition for Reconsideration filed by National Message Network on June 29, 1984. The Commission upholds its decision to use lottery procedures to choose among nationwide paging applications. The Commission declines to set aside an additional thirteen

frequencies from the reserve band for network organizers.

This action is taken by the Commission in the interest of efficient, expeditious service to the public and in order to utilize the spectrum in the most efficient manner possible.

This action will allow three network organizers to begin constructing nationwide systems promptly.

FOR FURTHER INFORMATION CONTACT: Susan Magnotti, Mobile Services Division, Common Carrier Bureau, (202) 632-6450.

SUPPLEMENTARY INFORMATION:

Order on Reconsideration

[FCC 85-139]

Before the Federal Communications Commission in the matter of amendments of parts 2 and 22 of the Commission's Rules to Allocate Spectrum in the 928-941 MHz Band and to establish other Rules, Policies and Procedures for One-way Paging Stations in the Domestic Land Mobile Service, Gen. Docket No. 80-183; RM-2365, RM-2750, RM-2047, RM-3068.

Adopted March 22, 1985.

Released March 27, 1985.

By the Commission:

1. Before us is a Petition for Reconsideration filed by National Message Network (NMN) on June 29, 1984. NMN requests that we reconsider certain aspects of the Third Report and Order, FCC 84-148, released May 24, 1984 (49 FR 22318, May 29, 1984), which finalized our regulatory policies for common carrier network paging.[1] American Paging Network, Inc. filed a comment in support of NMN's petition. In addition, in response to a request from the Commission's staff, additional comments and reply comments were filed.

I. Background

2. A nationwide paging system would enable subscribers to receive paging signals outside the range of the originating local service area. In our *First Report and Order*, 89 FCC 2d 1337, 1346-49 (1982), we allocated three frequencies for network paging: one frequency was intended for a nationwide network, and two would be used either for regional or for nationwide paging. On reconsideration, we decided to allocate all three frequencies for nationwide use exclusively. We adopted a two-step regulatory process in which one carrier (a "network organizer") will be licensed on each network frequency with the responsibility for organizing the network. Local radio common carriers (the "network operators") will affiliate with one or more network organizers to provide paging initiation and/or local distribution of network pages. *Memorandum Opinion and Order on Reconsideration* (Part 2), ("Reconsideration Order"), 93 FCC 2d 908 (1983). In our *Third Report and Order, supra*, we adopted an open access requirement for local-area carriers desiring to originate network system pages, but declined to adopt an open access requirement for carriers providing local distribution of network pages. (*Id.*, paras. 7-8). In addition, we preempted state authority over rate regulation of the network operators, and decided to forbear from regulating rates of both network organizers and operators (*Id.*, paras. 13-16). Finally, we decided to utilize a lottery to choose among network organizer applicants, and we developed streamlined application processes for network operators. (*Id.* paras. 19-20). On August 11, 1983, the Commission received applications from sixteen carriers desiring to be one of the three network organizers. On July 31, 1984, the Commission conducted the lottery, and chose three tentative selectees.[2]

3. NMN's petition concerns the portion of the *Third Report and Order* that adopts a lottery procedure for nationwide paging. NMN requests that the Commission consider alternative approaches other than a lottery to license nationwide paging systems. Specifically, NMN proposes that additional frequencies be authorized for network paging so that all pending applications could be licensed. It also argues that the Commission's decision to use a lottery is not in the public interest and requests, in the alternative to its proposal, that the Commission conduct a comparative evaluation in order to license network organizers. For the reasons explained below, we decline to adopt NMN's alternative proposal and affirm our decision to use a lottery approach.

II. Summary of the Arguments

4. NMN proposes that thirteen of the forty channels in the 900 MHz reserve band (930-931 MHz) be re-assigned for network paging systems to accommodate all applicants for network organizer. Because these frequencies are currently allocated for paging service, argues NMN, a new allocation proceeding is not required to implement this plan: The Commission could amend its Table of Frequency Allocations (47 CFR 2.106), or simply waive its rules upon a finding of good cause. To avoid inefficient spectrum utilization, NMN proposes that the authorization to operate an intercity paging network on one of these frequencies should be granted subject to the express condition that each network organizer must establish intercity network and transmission facilities in a certain number of markets within a specified period of time. If the network organizer failed to implement its system in the required amount of time, the right to operate on the frequency would terminate and the license would be automatically forfeited. Any channels thus "recaptured" would return to the reserve pool. This system would allow consumers to vote with their dollars for the services and service providers they prefer, rather than have their decisions shaped by the arbitrary selection/elimination process that occurs in a lottery. The most capable entrepreneurs would be rewarded for their efforts in developing the service.

5. NMN strongly criticizes the Commission's use of a lottery to decide among nationwide paging applicants. First it attacked what it termed the Commission's "sketchy" rationale for deciding to utilize a lottery. NMN contrasts our finding that each network organizer applicant "is proposing to provide the same basic service to the customer . . . and each is proposing to serve at least the minimum number of cities initially and expand nationwide within two years" (*Third Report* at para. 19), with our finding that the applications reflect a diversity of networking arrangements and technologies, as well as different "paging formats, service practices and maintenance plans." *Id.* at n. 35. NMN argues that the Commission failed to recognize, when concluding that network organizer proposals are no different than conventional PLMS paging applications, that, in the latter case, applicants merely propose the construction of one or more local paging transmitters, whereas in the former case, network organizers are seeking to establish an intercity network for the distribution of paging traffic and may or may not propose to operate local paging transmission facilities. Furthermore, the *Third Report*, characterizes network organizers as "providers or resellers of intercity exchange services" (para. 14) a business clearly distinguishable from traditional radio common carrier paging operations. NMN therefore urges us to evaluate other alternatives.

[1] National Satellite Paging, Inc. also filed a Petition for Reconsideration; however, this petition was withdrawn contingent upon Commission approval of the settlement agreement between NSP and Radiofone.

[2] Radiofone, Inc., United Paging Corporation, and Page Memo, Inc., are the tentative selectees.

6. NMN argues that comparative evaluation is justified in the case of nationwide paging. It states that our conclusion that there are no meaningful distinctions among the various proposals for nationwide paging contradicts prior Commission positions on this subject and ignores essential facts. First NMN cites our previous conclusions concerning the difference among proposals to providing nationwide paging service,[3] and states our "belated assertion" that no significant differences exist among the sixteen applicants is simply not true. Second, NMN argues that nationwide paging is not analogous to low power television and cellular radio, which were specifically authorized for lottery use by legislative history. There are hundreds of cellular and low power television licenses available, but only three nationwide paging frequencies. No excessive administrative burden or backlog would exist for such applicants, NMN argues. NMN also charges that the Commission has not conducted the type of evaluation of nationwide paging proposals that would form the basis of a reasoned conclusion that there is no difference from the public's standpoint which applicants are licensed. Some of the issues which NMN believes should form the basis of a comparative evaluation include networking technologies, paging formats, service proposals, maintenance plans, applicants' perception of the market, their understanding and application of network engineering principles and their utilization and adaptation of available technologies. In addition, NMN believes we should consider applicants' proposals for redundancy in equipment, customer service, network access, multiplicity of backup transmission paths, and viability of service design. According to NMN, the Commission should also examine the experience, resources, financial ability and technical, operation and market capabilities.

7. On October 11, 1984, the Commission's staff met with the network paging applicants to discuss NMN's proposal. Applicants who were not chosen as tentative selectees favored NMN's approach, while tentative selectees, usually along with their partners in partial settlement arrangements, vigorously opposed any increase in the number of network organizers. At the conclusion of the meeting, the staff requested that the parties submit their comments in writing.

8. Filing comments in favor of NMN's proposal are American Switch Co. (ASC), American Paging Network, Inc. (APN), Ranier Corporation, Ameripage, Inc., CBA Page, Inc. (CBA), and RadioPage America (RPA). APN, ASC, and NMN also filed reply comments. NMN and its supporters argue that a rulemaking is not necessary, and that the pool of prospective applicants need not be enlarged from the original sixteen. They point out that market forces should decide the best and strongest network organizers, that reserve frequencies can be used efficiently if the suggested licensing requirements are implemented, and fairness requires that all applicants be given an opportunity to compete if the Commission decides not to utilize comparative hearings.

9. Opposed to NMN's suggestion are American Satellite Paging, Inc. (ASP), Cybertel-Cox Beep USA Nationwide Paging (Beep USA), Contemporary Communications Corporation (CCC), and Page Memo, Inc. These applicants argue that creating new licenses would greatly prejudice tentative selectees, would be unfair because parties have already spent considerable sums to prepare their direct cases for comparative hearing, that the market could not support sixteen network organizers, that further delay is harmful, and that the Commission's decision to implement a lottery was reasonable. In addition, the winning applicants argue that a rulemaking is necessary to allocate additional frequencies.

III. Discussion

A. Additional Frequencies for Nationwide Paging Network

10. We decline to adopt NMN's alternative approach to licensing network paging. The comments filed in response to the staff's request fail to demonstrate that the public interest would be served by implementation of NMN's suggestion. As a threshhold matter, NMN's request for additional frequencies could be viewed as an untimely petition for reconsideration of the *First Report and Order, supra*, wherein we decided to allocate three frequencies for network paging. NMN's argument that it seeks "reconsideration of substantive licensing policies and procedures adopted for the first time in the *Third Report*" (Reply, p. 9) is partially incorrect: Only the lottery decision was made in the Third Report. The time to raise arguments concerning our decision in the *First Report and Order* to offer three frequencies for nationwide paging has long passed. The proper vehicle for requesting a change in such a policy would be a petition for rulemaking. *See Geller v. FCC*, 610 F. 2d 973 (D.C. Cir. 1979). We decline to issue a notice of proposed rulemaking, however, for the following reasons.

11. *Early availability of Nationwide Paging.* The speed with which nationwide paging service will be brought to the public is one of our primary concerns. After considering our obligations under the different scenarios suggested by the parties, it is clear that upholding our decision to license only three network organizers at this time will result in the earliest service to the public. The reasons for this decision are, first, that all the applications are on file and the lottery has been conducted.

The delay in issuing the three licenses results solely from the confusing settlements arranged by some applicants[4] and the pleadings we address here. Second, it is our considered opinion that a rulemaking is necessary to allocate additional frequencies from the reserve band. The addition of thirteen frequencies to this service is a significant departure from the scope of the original service as developed in the previous rulemaking case. Even if we were able to find that the type of open entry advocated by NMN is in the public interest, we cannot withdraw from the reserve band, and assign, 13 channels without considering alternative uses. We already have pending one petition to allocate a channel.[5] We also know that the Canadians are interested in some channels in the reserve, and there is likely to be demand for channels for local paging in the major markets. A rulemaking would take about a year to complete.[6]

---

[3] In 1980, we stated that the various rulemaking proposals and developmental applications to operate nationwide paging "differ substantially in their approaches." *Notice of Proposed Rulemaking*, Gen. Docket No. 80-183, FCC 80-231, 45 FR 32013 released May 8, 1980. In our 1983 *Reconsideration Order*, We referred to current proposals for nationwide paging that were "significantly different" from our original conceptualization of nationwide paging systems and that we expected to receive "disparate proposals" from network organizer applicants. *Reconsideration Order, supra*, paras. 15, 25, n. 11.

[4] Settlement Agreement, filed July 31, 1984, by NSP, PageMemo, CCC, Radiofone, and NPN. Two of the parties to this agreement were lottery winners, giving rise to two further agreements among divided co-signors.

[5] Amendment of § 2.106 of Part 2 of the Commission's Rules to allocate the reserve frequency 930.0125 MHz, RM 4687, filed Jan. 8, 1985 (Public Notice Janaury 28, 1985).

[6] The losing nationwide applicants may request that we initiate procedures to allocate additional channels from the reserve; however, we will not delay granting the three initial construction permits while we consider such a request.

12. The third reason for our decision to remain with the allocation of three network organizer frequencies is that additional frequency allocation would not remove the delays associated with appeals of Commission decisions. The result of a rulemaking for additional frequency allocation would be to inject another set of litigants: Some demanding a comparative hearing, some supporting the lottery decision, third parties opposing such use of the reserve spectrum, and still others against (or in favor) or re-opening the application process and of headstart by existing applicants. Clearly, speedy service to the public would not result.

13. *Quality of Network Organizers.* One of the arguments raised by NMN concerned the idea that market forces should choose among all sixteen network organizer applicants, rather than random selection. Under this system, customers would "vote" with their dollars for the best systems, thus assuring that the strongest competitors among network organizers would survive. Network organizers which do not offer popular systems would either fail or be unable to meet the expansion requirements, and their frequencies would be returned to the reserve pool.

14. Such a market-based system has much appeal. Nevertheless, there are limitations on the amount of spectrum that can be allocated for the free competitive development of any service. We have still been offered no reason to believe that more than three channels should be set aside for nationwide paging organizers.[7] In addition, wide-area and regional paging systems are developing rapidly, and these would be likely to compete for some of the customers that might use nationwide paging, thereby slowing the rate of increase in demand for nationwide paging. Further delay in licensing network organizers, and the potential for many more organizers in the market, would serve to undercut demand still further.

B. Lottery Procedures.

15. We also reject NMN's claim that a lottery procedure for network paging is not in the public interest. NMN misperceives our reasons for choosing to utilize lottery procedures for nationwide paging. We adopted lottery for this new service because there are no decisionally significant differences among applicants, and because each applicant proposes to meet our minimum service requirements. We found that network organizer applications are no more different from one another than are other DPLMRS applications. We concluded that "for the same reasons we decided to use lotteries for mutually exclusive DPLMRS applications, we also find that a lottery will serve the public interest in this instance." We further stated that only minimal benefits to the public could result from a comparative hearing. *Third Report and Order, supra,* at para. 19. While it is true, as NMN points out, that network service is technologically somewhat different from traditional radio common carrier paging operations, the fact remains that, from an administrative point of view, these applications are very similar: They propose one-way paging service in essentially the same markets with substantially similar consumer offerings. A comparative hearing would not measurably assist us in choosing the best three network organizers. Technological differnces among types of public land mobile services do not, in and of themselves, justify different processing. Furthermore there are sixteen mutually exclusive applications; the resulting comparative hearing would have been extremely complicated and burdensome, and almost impossible to conduct on an expedited basis. *See generally Cellular Lottery Order,* 56 RR2d 8 (1984), at para. 21. In contrast, as a result of our decison to adopt lottery, we are prepared to issue authorizations for network paging contemporaneously with this decision.[8]

IV. Conclusion

16. The public has waited long enough for nationwide paging service. There are three frequencies available now and technically qualified applicants are available to begin service quickly. As our discussion herein has shown, further delay is clearly not in the public interest. We remain free to revisit the issue of need for additional nationwide paging frequencies through a future rulemaking.

17. We have considered the alternatives proposed by the parties and remain convinced that a lottery in conjunction with marketplace forces will bring the best service to the public in the least amount of time.

V. Ordering Clause

18. Accordingly, it is ordered, that the Petition for Reconsideration filed by National Message Network is denied.

Federal Communications Commission.

William J. Tricarico,

Secretary.

[FR Doc. 85-8896 Filed 4-11-85; 8:45 am]

BILLING CODE 6712-01-M

[7] In response to our original notice, *supra* note 3, not one party suggested that more than three channels for nationwide paging were desirable.

[8] We project that it would have been mid-1986 at the earliest before we would have issued authorizations for this service using comparative processes.

---

47 CFR Part 90

Frequency Allocation to the Offshore Radio Service

AGENCY: Federal Communications Commission.

ACTION: Final rule; Correction.

SUMMARY: The Federal Communications Commission corrects a typographical error in its *Report and Order,* FCC 84-509, released March 20, 1985 relating to frequency allocation to the Offshore Radio Service (March 27, 1985, 50 FR 12021). The error is editorial in nature and needs to be corrected to make the *Report and Order* accurate.

ADDRESS: Federal Communications Commission, 1919 "M" Street, NW., Washington, D.C. 20554.

FOR FURTHER INFORMATION CONTACT: Mr. Fred Thomas, Office of Science and Technology 2025 "M" Street, NW. 20554, (202) 653-8162.

SUPPLEMENTARY INFORMATION:

Erratum

In the matter of Amendment of Parts 2, 22, 74 and 90 of the Commission's rules to provide additional Channels for the Offshore Radio Service. Gen. Docket No. 83-45; RM-3910, RM-3924.

Released: April 4, 1985.

The Commission's *Report and Order,* FCC 84-509, released March 20, 1985, is corrected by modifying the text of § 90.315(k) in the middle column of page 12028 by replacing the referenced rule section "§91.173" by "§90.173."

Federal Communications Commission.

William J. Tricarico,

Secretary.

[FR Doc. 85-8893 Filed 4-11-85; 8:45 am]

BILLING CODE 6712-01-M

Proposed Rules

Federal Register
Vol. 50, No. 71
Friday, April 12, 1985

This section of the FEDERAL REGISTER contains notices to the public of the proposed issuance of rules and regulations. The purpose of these notices is to give interested persons an opportunity to participate in the rule making prior to the adoption of the final rules.

DEPARTMENT OF AGRICULTURE

Agricultural Marketing Service

7 CFR Part 1150

Dairy Promotion Program; Referendum Order; Determination of Representative Period; and Designation of Referendum Agent

AGENCY: Agricultural Marketing Service, USDA.

ACTION: Referendum order.

SUMMARY: This document orders that a referendum be conducted to determine whether producers favor the continuation of the Dairy Promotion and Research Order. Title I, subtitle B, of the Dairy and Tobacco Adjustment Act of 1983, which authorized the implementation of the promotion order, requires that the referendum be conducted within the 60-day period preceding September 30, 1985. In order to be continued, the Dairy Promotion and Research Order must be approved by a majority of the producers voting in the referendum.

DATE: The referendum is to be completed within the 60-day period preceding September 30, 1985.

FOR FURTHER INFORMATION CONTACT: Richard M. McKee, Chief, Promotion and Research Staff, Dairy Division, Agricultural Marketing Service, U.S. Department of Agriculture, Washington, D.C. 20250, (202) 447-6909.

SUPPLEMENTARY INFORMATION: It is hereby directed that a referendum be conducted among producers for the purpose of ascertaining whether the Dairy Promotion and Research Order, as amended, shall be continued. Pursuant to section 115(a) of the Dairy and Tobacco Adjustment Act of 1983, such order shall be continued only if the Secretary determines that it is approved by not less than a majority of the producers voting in the referendum, who during a representative period (as determined by the Secretary) have been engaged in the production of milk for commercial use.

The month of April 1985 is hereby determined to be the representative period for the conduct of such referendum.

John R. Williams is hereby designated as the agent of the Secretary to conduct such referendum in accordance with the procedure for the conduct of referenda in connection with the Dairy Promotion and Research Order. (7 CFR 1150.200, *et seq.*).

Such referendum shall be completed within the 60-day period preceding September 30, 1985.

List of Subjects in 7 CFR Part 1150

Milk, Dairy products, Promotion, Research.

(Pub. L. 98-180, 97 Stat. 1128)

Signed at Washington, D.C., on April 8, 1985.

James C. Handley,
Administrator.

[FR Doc. 85-8742 Filed 4-11-85; 8:45 am]

BILLING CODE 3410-02-M

DEPARTMENT OF TRANSPORTATION

Federal Aviation Administration

14 CFR Part 39

[Docket No. 85-ASW-10]

Airworthiness Directives; Aerospatiale (Societe Nationale Industrielle Aerospatiale) Model SA-365 Series Helicopters

AGENCY: Federal Aviation Administration (FAA), DOT.

ACTION: Notice of proposed rulemaking (NPRM).

SUMMARY: This notice proposes to adopt an airworthiness directive (AD) that would require repetitive inspections of the main rotor mast on Aerospatiale Model SA-365 series helicopters. The proposed AD is needed to detect corrosion or cracks which could result in failure of the main rotor mast and consequent loss of control of the helicopter.

DATES: Comments must be received on or before May 17, 1985.

ADDRESSES: Comments on the proposal may be mailed in duplicate to: Office of the Regional Counsel, FAA, Southwest Region, P.O. Box 1689, Fort Worth, Texas 76101, or delivered in duplicate to: Office of the Regional Counsel, FAA, Southwest Region, Room 158, Building 3B, 4400 Blue Mound Road, Fort Worth, Texas 76106. Comments delivered must be marked: Docket No. 85-ASW-10. Comments may be inspected in Room 158, Building 3B, Office of the Regional Counsel, Southwest Region, between 8 a.m. and 4 p.m., weekdays, except Federal holidays.

The applicable service bulletins may be obtained from: Aerospatiale Helicopter Corporation, 2701 Forum Drive, Grand Prairie, Texas 75051, Attention: Customer Support.

A copy of each of the service bulletins is contained in the Rules Docket, Office of the Regional Counsel, FAA, Southwest Region, 4400 Blue Mound Road, Fort Worth, Texas 76106.

FOR FURTHER INFORMATION CONTACT: Chris Christie, Manager, Aircraft Certification Office, FAA, Europe, Africa, and Middle East Office, c/o American Embassy, Brussels, Belgium, APO NY 09667, telephone number 513.38.30; or R. T. Weaver, Regulations Program Management, ASW-111, Federal Aviation Administration, P.O. Box 1689, Fort Worth, Texas 76101, telephone number (817) 877-2548.

SUPPLEMENTARY INFORMATION: Interested persons are invited to participate in the making of the proposed rule by submitting such written data, views, or arguments as they may desire. Communications should identify the regulatory docket number and be submitted in duplicate to the address specified above. All communications received on or before the closing date for comments will be considered by the Director before taking action on the proposed rule. The proposal contained in this notice may be changed in light of comments.

Comments are specifically invited on the overall regulatory, economic, environmental, and energy aspects of the proposed rule. All comments submitted will be available, both before and after the closing date for comments, in the Rules Docket, Office of the Regional Counsel, 4400 Blue Mound Road, Fort Worth, Texas 76106, for examination by interested persons. A report summarizing each FAA-public contact, concerned with the substance of the proposed AD, will be filed in the Rules Docket.

Commenters wishing the FAA to acknowledge receipt of their comments submitted in response to this notice must submit a self-addressed, stamped postcard on which the following statement is made: "Comments to Docket No. 85-ASW-10." The postcard will be date/time stamped and returned to the commenter.

The FAA has determined that corrosion of the main rotor masts may occur as a result of fretting or finish deterioration which could result in fatigue cracking and crack growth which could cause loss of the helicopter.

Since this condition is likely to exist or develop on other helicopters of the same type design, the proposed AD would require visual repetitive inspections and repair or replacement, as necessary, of the main rotor mast on Aerospatiale Model SA-365 series helicopters.

The FAA has determined that this proposed regulation only involves 13 helicopters in operation in the United States with an annual cost of $2,800 for each helicopter. Therefore, I certify that this action (1) is not a "major rule" under Executive Order 12291; (2) is not a "significant rule" under DOT Regulatory Policies and Procedures (44 FR 11034; February 26, 1979); (3) does not warrant preparation of a regulatory evaluation as the anticipated impact is so minimal; and (4) if promulgated, will not have a significant economic impact on a substantial number of small entities under the criteria of the Regulatory Flexibility Act.

List of Subjects 14 CFR Part 39

Air transportation, Aircraft, Aviation safety, Safety.

The Proposed Amendment

Accordingly, the Federal Aviation Administration proposes to amend § 39.13 of Part 39 of the Federal Aviation Regulations (14 CFR 39.13) by adding the following new AD:

AEROSPATIALE (Societe Nationale Industrielle Aerospatiale): Applies to Aerospatiale Model SA-365 series helicopters, certificated in all categories.

Compliance is required as indicated (unless already accomplished).

To prevent possible failure of the main rotor mast, accomplish the following:

(a) For helicopters which have 250 hours' or more total time in service on the main rotor mast on the effective date of this AD, inspect in accordance with paragraph (d) within 50 hours' time in service, unless already accomplished.

(b) For those helicopters which have less than 250 hours' total time in service on the main rotor mast on the effective date of this AD, inspect in accordance with paragraph (d) before reaching 300 hours' time in service on the main rotor mast, unless already accomplished.

(c) For those helicopters exhibiting a severe tracking defect, inspect in accordance with paragraph (d) before further flight, unless already accomplished.

(d) Remove the main rotor hub from the main rotor mast and inspect the mast in accordance with Service Bulletin No. 05.08 (for Model SA-365C series helicopters) and Service Bulletin No. 05.04 (for Model SA-365N helicopters) or FAA-approved equivalent, as appropriate.

(e) Replace any cracked masts with a serviceable part.

(f) Reinstall the main rotor hub in accordance with the appropriate Service Bulletin No. 05.08 or 05.04, or FAA-approved equivalent, after completion of the inspection and rework of paragraphs (d) and (e).

(g) Repeat the inspections required in paragraph (d) at intervals not to exceed 300 hours' time in service from the last inspection.

(h) After the installation or corrosion resistant mast (P/N 365A31-1179-02), the inspections of paragraphs (a), (b), (d), and (g) no longer apply.

(i) Any equivalent method of compliance with this AD must be approved by the Manager, Aircraft Certification Division, Federal Aviation Administration, 4400 Blue Mound Road, Fort Worth, Texas 76106 or by the Manager, Aircraft Certification Office, AEU-100, Europe, Africa, and Middle East Office, Federal Aviation Administration, c/o American Embassy, Brussels, Belgium 09667.

(j) In accordance with FAR §§ 21.197 and 21.199, flight is permitted to a base where the inspections required by this AD may be accomplished.

(Secs. 313(a), 601, and 603, Federal Aviation Act of 1958, as amended (49 U.S.C. 1354(a), 1421, and 1423); 49 U.S.C. 106(g) (Revised, Pub. L. 97-449, January 12, 1983); 14 CFR 11.85)

Issued in Fort Worth, Texas, on March 28, 1985.

F.E. Whitfield,

Acting Director, Southwest Region.

[FR Doc. 85-8780 Filed 4-11-85; 8:45 am]

BILLING CODE 4910-13-M

---

14 CFR Part 39

[Docket No. 85-CE-13-AD]

Airworthiness Directives: Fairchild Burns Company Models FBC-2000A-2-42, FBC-2000A-2-45, FBC-2000A-3-57, FBC-2000A-3-59 and FBC-2000A-3-62 Aft Facing Seats

AGENCY: Federal Aviation Administration (FAA), DOT.

ACTION: Notice of Proposed Rulemaking (NPRM).

SUMMARY: This Notice proposes to adopt a new Airworthiness Directive (AD), applicable to Fairchild Burns Company Models FBC-2000A-2-42, FBC-2000A-2-45, FBC-2000A-3-57, FBC-2000A-3-59 and FBC-2000A-3-62 seats. This AD would require inspection and modification of the center spreaders on certain models of aft facing seats manufactured by the Fairchild Burns Company in accordance with FAA Technical Standard Order (TSO) C-39a, Aircraft Seats and Berths. The results of structural tests indicate that the center spreaders do not comply with the emergency landing condition requirements of the Federal Aviation Regulations. This condition could result in the failure of the seats in a minor crash landing and injury to the occupants of these seats. The proposed inspection and modification will preclude this occurrence.

DATES: Comments must be received on or before May 17, 1985.

ADDRESSES: Fairchild Burns Service Bulletins (S/B) A25-20-526, Revision "B", S/B A25-20-527, Revision A, and S/B A25-20-528, Revision "C", applicable to this AD may be obtained from the Fairchild Burns Company, 1455 Fairchild Road, Winston-Salem, North Carolina 27105 or the Rules Docket at the address below. Send comments on the proposal in duplicate to Federal Aviation Administration, Central Region, Office of the Regional Counsel, Attention: Rules Docket No. 85-CE-13-AD, Room 1558, 601 East 12th Street, Kansas City, Missouri 64106. Comments may be inspected at this location between 8 a.m. and 4 p.m., Monday through Friday, holidays excepted.

FOR FURTHER INFORMATION CONTACT: Jack Bentley, Aeorspace Engineer, Atlanta Aircraft Certification Office, ACE-120A, Central Region, Federal Aviation Administration, 1075 Inner Loop Road, College Park, Georgia 30337; Telephone (404) 763-7407.

SUPPLEMENTARY INFORMATION:

Comments Invited

Interested persons are invited to participate in the making of the proposed rule by submitting such written data, views or arguments as they may desire. Communications should identify the regulatory docket or notice number and be submitted in duplicate to the address specified above. All communications received on or before the closing date for comments specified above will be considered by the Director before taking action on the proposed rule. The proposals contained in this notice may be changed in the

light of comments received. Comments are specifically invited on the overall regulatory, economic, environmental and energy aspects of the proposed rule. All comments submitted will be available both before and after the closing date for comments in Rules Docket for examination by interested persons. A report summarizing each FAA public contact concerned with the substance of this proposal will be filed in the Rules Docket.

Availability of NPRMs

Any person may obtain a copy of this Notice of Proposed Rulemaking (NPRM) by submitting a request to the Federal Aviation Administration, Central Region, Office of the Regional Counsel, Attention: Airworthiness Rules Docket No. 85-CE-13-AD, Room 1558, 601 East 12th Street, Kansas City, Missouri 64106.

Discussion

The FAA has determined that the center spreaders on certain models of aft facing seats manufactured by the Fairchild Burns Company do not comply with the emergency landing condition requirements of the Federal Aviation Regulations. This noncompliance could result in the failure of the seats in a minor crash landing. This condition was discovered by the manufacturer during a structural test program where it was determined that center spreaders, manufactured with lightening holes in the web portion of the spreaders, do not permit these seat assemblies to comply with the applicable regulatory emergency landing conditions. Since the condition described is likely to exist or develop in other seats of the same design, the proposed AD would require inspection and modification, as necessary, of the center spreaders of Fairchild Burns Company Models FBC-2000A-2-42, FBC-2000A-2-45, FBC-2000A-3-57, FBC-2000A-3-59 and FBC-2000A-3-62 aft facing seats in accordance with applicable service bulletins. The FAA has determined there are approximately 460 seats affected by the proposed AD. The cost to the private sector of complying with the proposed AD is estimated to be $15 per seat. The total cost is estimated to be $6900 to the private sector. This cost precludes the proposed AD from having a significant economic impact on any small entity under the criteria of the Regulatory Flexibility Act.

Therefore, I certify that this action (1) is not a major rule under the provisions of Executive Order 12291, (2) is not a significant rule under DOT Regulatory Policies and Procedures (44 FR 11034; February 26, 1979) and (3) if promulgated, will not have a significant economic impact on a substantial number of small entities under the criteria of the Regulatory Flexibility Act. A copy of the draft regulatory evaluation has been prepared for this action and has been placed in the public docket. A copy of it may be obtained by contacting the Rules Docket at the location provided under the caption "ADDRESSES".

List of Subjects in 14 CFR Part 39

Air transportation, Aviation safety, Aircraft, Safety.

The Proposed Amendment

Accordingly, the Federal Aviation Administration proposes to amend § 39.13 of Part 39 of the Federal Aviation Regulations (14 CFR 39.13) by adding the following new AD:

Fairchild Burns Company: Applies to Models FBC-2000A-2-42, FBC-2000A-2-45, FBC-2000A-3-57, FBC-2000A-3-59 and FBC-2000A-3-62 aft facing seats (all serial numbers listed in the service bulletins in paragraph (a) of this AD) manufactured in accordance with FAA Technical Standard Order (TSO) C-39a, Aircraft Seats and Berths, installed in aircraft certified in any category.

Compliance: Required within the next 30 days after the effective date of this AD, unless already accomplished.

To prevent failure of the aft facing seats in the event of a minor crash landing, accomplish the following:

(a) Visually inspect and modify, as required, the center spreader, aft facing seats in accordance with the following Fairchild Burns Service Bulletins:

(1) A25-20-526, Revision "B": Models FBC-2000A-2-42 and FBC-2000A-3-62 seats.

(2) A25-20-527, Revision "A": Models FBC-2000A-2-45 and FBC-2000A-3-59 seats.

(3) A25-20-528, Revision "C": Models FBC-2000A-2-42, FBC-2000A-3-57 and FBC-2000A-3-62 seats.

(b) Airplanes may be flown in accordance with FAR 21.197 to a location where this AD may be accomplished.

(c) An equivalent means of compliance with this AD may be used if approved by the Manager, Atlanta Aircraft Certification Office, Federal Aviation Administration, Central Region.

(Secs. 313(a), 601 and 603 of the Federal Aviation Act of 1958, as amended (49 U.S.C. 1354(a), 1421 and 1423); 49 U.S.C. 106(g) (Revised Pub. L. 97-449, January 12, 1983); and Section 11.85 of the Federal Aviation Regulations (14 CFR 11.85))

Issued in Kansas City, Missouri, on April 2, 1985.

Murray E. Smith,

Director, Central Region.

[FR Doc. 85-8781 Filed 4-11-85; 8:45 am]

BILLING CODE 4910-13-M

DEPARTMENT OF THE TREASURY

Internal Revenue Service

26 CFR Parts 1, 31, and 54

[LR-216-84; LR-145-84]

Taxation of Fringe Benefits and the Limitation on the Amount of Cost Recovery Deductions and Investment Tax Credit for Luxury Automobiles, and the Limitation When Certain Property Is Used for Personal Purposes; Public Hearing on Proposed Regulations

AGENCY: Internal Revenue Service, Treasury.

ACTION: Announcement.

SUMMARY: This document announces a change in the agenda for the public hearing that is to be held on April 16, 17, and 18 at the Internal Revenue Service, 1111 Constitution Avenue, NW., Washington, D.C.

FOR FURTHER INFORMATION CONTACT: Cynthia Grigsby, Legislation and Regulations Division, Office of Chief Counsel, Internal Revenue Service, Washington, D.C. 20224. Telephone 202-566-3935 (not a toll-free number).

SUPPLEMENTARY INFORMATION:

Background

On February 20, 1985, the Internal Revenue Service published in the **Federal Register** (50 FR 7072) a notice of public hearing on proposed regulations. The regulations that are to be the subject of the hearing were also published in the **Federal Register** on February 20, 1985 (50 FR 7071 for LR-145-84 and 50 FR 7073 for LR-216-84). These proposed rules pertain to the limitation on the amount of cost recovery deductions and investment tax credit for luxury automobiles, and the limitation when certain property is used for personal purposes, and the taxation of fringe benefits. The hearing is scheduled to be held April 16, 17, and 18, 1985, in the IRS Auditorium beginning at 10:00 a.m. on each of the three days.

Announcement

There is a change in the agenda for the hearing. Because of recent Congressional developments, the proposed regulations relating to the recordkeeping rules of section 274(d) of the Internal Revenue Code will no longer be a subject for oral presentations.

All other matters pertaining to this hearing remain as previously announced.

Peter K. Scott,

Director, Legislation and Regulations Division.

[FR Doc. 85-8835 Filed 4-11-85; 8:45 am]

BILLING CODE 4830-01-M

VETERANS ADMINISTRATION

38 CFR Part 1

Inventions by VA Employees as Coinventors in Research Supported by Nonprofit Organizations and Small Businesses

AGENCY: Veterans Administration.

ACTION: Proposed regulations.

SUMMARY: The purpose of this proposed rulemaking is to provide policy, procedure, and guidelines with respect to ownership of patent rights to inventions made by VA (Veterans Administration) employees as coinventors under funding agreements with nonprofit organizations, including universities, and small business firm, (contractors) where the purpose is to perform experimental, developmental or research work. As a result of the affiliation of VA medical centers and local universities or other institutions of higher learning, VA employees are oftentimes involved in the development of inventions in conjunction with employees of those institutions without a specific contract for that research having been made. Universities have been requesting that the VA assign or transfer its interest to an invention to the university in those instances where a university coinventor is involved. Due to the instances where this situation has arisen and may be expected to arise in the future, it is necessary for the VA to set forth procedures and criteria for determination of patent rights ownership in those situations. Accordingly, this proposed rule specifies the bases the VA will use to make such determinations and the conditions applicable to any assignment made. These procedures and criteria would apply to inventions involving VA employee coninventors under funding agreements between the VA and nonprofit organizations or small business firms covering research which is not the subject of any other contract, grant, or agreement. The regulations shall apply only to inventions made after the effective date.

DATES: Comments must be received on or before May 13, 1985.

ADDRESSES: Interested persons are invited to submit written comments, suggestions, or objections regarding these proposed regulations to: Administrator of Veterans Affairs (271A), 810 Vermont Avenue, NW, Washington, DC 20420. All written comments received will be available for public inspection only in the Veterans Services Unit, room 132 of the above address, between the hours of 8 a.m. to 4:30 p.m., Monday through Friday (except holidays) until May 28, 1985.

FOR FURTHER INFORMATION CONTACT: Diana M. Bloss, Deputy Assistant General Counsel, Veterans Administration, (202) 389-5061.

SUPPLEMENTARY INFORMATION:

I. Background

The Patent and Trademarks Amendments of 1980, Pub. L. 96-517, provides, in part, that in any case where a Federal employee is a coinventor of any invention made under a funding agreement with a nonprofit organization or small business firm, the Federal agency employing the coinventer is authorized to transfer or assign whatever rights it may acquire in the subject invention from its employee to the contractor, subject to the conditions set forth in chapter 18 of title 35, United States Code. (35 U.S.C. 202(e))

It is clear that Congress conferred discretionary authority to the agency employing the Federal coinventor to transfer or assign any rights it has acquired from its employee in any invention made under a funding agreement with a nonprofit organization or small business firm to the contractor. Other situations, not involving a Federal employee coinventor or a funding agreement, would be covered under specific contracts. In those instances, the contract provisions regarding disposition of patent rights would govern. If such contracts contained no provisions with regard to disposition of patent rights, the general provisions of Pub. L. 96-517 would govern.

II. Description of the Proposed Rules.

The proposed rules set out the obligation of the contractor to inform the agency of any invention in which a VA employee is a coinventor. This provision, it is hoped, will ensure that the agency is aware of contractor involvement and interest prior to making a determination of rights in and to an invention in accordance with Executive Order 10096, as amended, which sets forth the criteria for determination of patent rights ownership between a Government employee inventor and the Government. The proposed rule also sets out the information the contractor must provide along with the request for assignment or transfer, the bases the agency will use to make the determination, and the conditions applicable to any assignment made. The proposed rule additionally provides for the contractor to make monetary awards or payments to the VA coinventor in those instances where it is assigned the agency's interest to the invention, and the marketing of the invention may result in royalties to the contractor.

The Administrator has determined that this proposed rule is not a major rule as that term is defined by Executive Order 12291 on Federal Regulations. The annual effect on the economy would be less than $100 million. The rule would not cause a major increase in costs or prices; nor would it have significant adverse effects on the economy.

The Administrator has certified that these proposed regulations will not have a significant impact on a substantial number of small entities as they are defined in the Regulatory Flexibility Act, 5 U.S.C. 601-612. Compliance and reporting burdens other than those already imposed by Pub. L. 96-517 and OMB Circular A-124 would be minimal.

The information collection requirements contained in § 1.639 of these regulations have been submitted to OMB for review under section 3504(h) of the Paperwork Reduction Act of 1980. Comments on the information collection requirement(s) should be submitted to: Office of Information and Regulatory Affairs of OMB, Attention: Desk Officer for the Veterans Administration, 726 Jackson Place, NW, Washington, DC 20503 (202) 395-6880.

There is no catalog of Federal Domestic Assistance Number involved.

List of Subjects in 38 CFR Part 1

Administrative practice and procedures, government contracts, government property, inventions and patents.

Approved: February 15, 1985.

Harry N. Walters,

Administrator.

PART 1—[AMENDED]

38 CFR Part 1, *General*, is amended by proposing to add the following new center heading and §§ 1.635 through 1.644 to read as follows:

Inventions by Employees of the Veterans Administration as Coinventors in Research Supported by Nonprofit Organizations and Small Businesses

§ 1.635 Purpose.

The purpose of these regulations concerning inventions by employees of the VA as coinventors under funding agreements with nonprofit organizations, including universities, and small business firms is to set forth policy, procedure and guidelines to be followed in determining patent rights to inventions developed under research which is not the subject of any other contract, grant or agreement. (35 U.S.C. 202(e))

§ 1.636 Definitions.

(a) The term "funding agreement" means any contract, grant, or cooperative agreement entered into by the VA and any contractor for the performance of experimental, developmental, or research work. (35 U.S.C. 201(b))

(b) The term "contractor" means any person, small business firm, or nonprofit organization, including a university, that is a party to a funding agreement. (35 U.S.C. 201(c))

(c) The term "small business firm" means a small business concern as defined in 15 U.S.C. 632 and implementing regulations of the Administrator of the Small Business Administration. (35 U.S.C. 201(h))

(d) The term "nonprofit organization" means universities and other institutions of higher education or an organization of the type described in section 501(c)(3) of the Internal Revenue Code of 1954 (26 U.S.C. 501(c)) and exempt from taxation under section 501(a) of the Internal Revenue Code (26 U.S.C. 501(a)) or any nonprofit scientific or educational organization qualified under a State nonprofit organization statute. (35 US.C.(i))

(e) The term "invention" means any invention or discovery which is or may be patentable or otherwise protectable under title 35, United States Code. (35 U.S.C. 201(d))

(f) The term "subject invention" means any invention conceived or first actually reduced to practice by a VA employee coinventor in the performance of work under a funding agreement. (35 U.S.C. 201(e))

(g) The term "employee' or "Government employee" means any officer or employee, civilian or military, of the VA. Part-time employees, part-time consultants, without compensation employees, interns and residents are included. (38 U.S.C. 210(c))

§ 1.637 Governing provisions.

(a) *Authorization to transfer rights.* When a Federal employee is a coinventor of any invention made under a funding agreement with a nonprofit organization or small business firm, the Federal agency employing such coinventor is authorized to transfer or assign whatever rights it may acquire in the subject invention from its employee to the contractor. Such assignment or transfer is, however, subject to the specific conditions set forth in chapter 18 of title 35, United States Code. (35 U.S.C. 202(e))

(b) *Conditions of transfer.* In any case when a Federal agency transfers or assigns the right it has acquired in a subject invention from its employee to the contractor under 35 U.S.C. 202(e), the assignment will be made subject to the same conditions as would otherwise apply to the contractor were no Federal employee coinventor involved. Those conditions are set forth in the clause of Attachment A to OMB Circular A-124. (35 U.S.C. 202(e); OMB Circular A-124)

§ 1.638 Delegation of authority.

The General Counsel is authorized to act for the Administrator of Veterans Affairs in matters concerning patents and inventions, unless otherwise required by law. The determination of rights to an invention made by a VA employee coinventor under a funding agreement shall be made by the General Counsel, subject to the approval of the Commissioner of Patents and Trademarks, where required. Any decision as to march-in rights under § 1.643 will be made by the Office of the General Counsel, Veterans Administration, (hereinafter referred to as the Office of the General Counsel). (38 U.S.C. 210)

§ 1.639 Disclosure and request for assignment of patent rights.

When the contractor becomes aware of the existence of a possible invention made by a VA employee as a coinventor arising out of research which is the subject of a funding agreement, the contractor, if it wishes to obtain an assignment, shall make a request in writing to the Office of the General Counsel (024), VA Central Office, 810 Vermont Avenue, NW, Washington, DC 20420. The request shall be postmarked within 120 calendar days of the date the contractor becomes aware of the existence of the invention or within 15 days after the contractor becomes aware of the filing of a patent application, whichever occurs first. The request shall:

(a) Describe the invention with specificity, including the date the invention was conceived or first actually reduced to practice, and shall state the names and business addresses of all known inventors; (35 U.S.C. 202(e))

(b) Include a copy of any publication describing the invention, including the date of any publication, and any manuscript submitted for publication, and identify any public use of the invention, and; (35 U.S.C. 202(e))

(c) Include a statement of the contractor's contribution to the development of the invention, including the financial value of that contribution, as of the time of making its request. A copy of any patent application filed with regard to the invention shall be provided to the Office of the General Counsel within 15 days of filing. The contractor shall provide the VA medical center that is a party to the funding agreement, copies of all documents provided to the Office of the General Counsel. If the VA medical center becomes aware of the existence of a possible invention under its funding agreement prior to notification from the contractor, it shall forward all available information to the Office of the General Counsel. The Office of the General Counsel will promptly notify the contractor of the existence of a possible invention and make available the information received. (35 U.S.C. 202(e))

(d) The time limit for disclosure and request for assignment of patent rights may be extended by the Office of the General Counsel upon the contractor's request. (35 U.S.C. 202(e))

§ 1.640 Allocation of rights.

The Office of the General Counsel shall determine whether to grant the contractor's request for assignment or transfer of patent rights on the following bases:

(a) In all cases where considerations of national security so require, all interest in and to the invention shall remain in the United States Government, as represented by the Administrator of Veterans Affairs or assignee. (35 U.S.C. 202(e))

(b) In all cases where the individual contribution of the VA employee coinventor is such as equitably to warrant granting such title in the invention as the United States might otherwise obtain to said employee under 37 CFR 100.6(b)(2), such title shall be granted to the employee coinventor in accordance with the procedures in 37 CFR 100.1 through 100.11 and §§ 1.650 through 1.666 of this chapter. Any decision adverse to the VA employee coinventor under this paragraph may be appealed to the Commissioner of Patents and Trademarks in accordance

with the procedures set forth in 37 CFR 100.7. (35 U.S.C. 202(e))

(c) In cases not covered by paragraphs (a) and (b) of this section where the contractor's contribution to the research giving rise to the invention has been preponderant (over 50 percent) in comparison to that of the VA, where the VA official or officials responsible for approving the VA's contribution to the research have been kept informed of the contractor's involvement, and the contractor has made a request for assignment of rights which meets the time limits and other requirements of § 1.639, the VA shall assign to the contractor whatever rights it may acquire in the invention from its employee(s), and may, in its discretion, assign such rights to the contractor under circumstances where the above criteria are not met. Any assignment shall be subject to the applicable conditions set forth in OMB Circular A-124, except as modified herein. (35 U.S.C. 202(e))

§ 1.641 Expenditures by contractor in pursuing a patent prior to agency assignment or transfer.

Any expenditures by the contractor pursuing a patent application prior to any assignment of rights to the contractor by the VA are at the contractor's risk. The contractor is not entitled to any reimbursement from the VA for such expenditures should the VA retain rights. The VA shall not consider such expenditures as part of the contractor's contribution in determining rights, except when immediate action is necessary to avoid bars to filing. (35 U.S.C. 202(e))

§ 1.642 Conditions of assignment or transfer.

(a) The United States Government shall have a nonexclusive, nontransferable, irrevocable, paid-up license to practice or have practiced for or on behalf of the United States the invention throughout the world and shall have the additional rights to sub-license any foreign government or international organization pursuant to any existing or future treaty or agreement. (35 U.S.C. 202(c)(4))

(b) In the event the contractor shall execute a royalty-bearing license agreement in the invention, the contractor shall pay the VA employee coinventor $300 per year for each year any such royalty-bearing license agreement is in effect or shall make such annual payments to the VA employee coinventor as it would make were that VA employee an employee of the contractor, whichever annual amount is greater. (35 U.S.C. 202 (c)(7)(C), (e))

(c) All other conditions of assignment or transfer as set forth in Attachment A of OMB Circular A-124, are applicable, except as modified herein in accordance with part 17 of OMB Circular A-124. (35 U.S.C. 202(e))

§ 1.643 March-in procedures.

Whenever the VA receives information that it believes might warrant the exercise of march-in rights to request or grant a license under paragraph j. of the clause of Attachment A of OMB Circular A-124, it shall notify the contractor in writing of the information and request informal written or oral comments from the contractor. If no comments are received from the contractor within 30 days, the VA may proceed in accordance with paragraphs (a) through (f) of this section. If a comment is received, then the VA shall, within 60 days thereafter, initiate the procedures stated in paragraphs (a) through (f) of this section or notify the contractor, in writing, that it will not pursue march-in rights based on the information about which the contractor was notified. (35 U.S.C. 203; OMB Circular A-124, part 13)

(a) If a march-in proceeding is to be initiated, it shall be initiated by issuance of a written notice by the VA to the contractor and its assignee or licensee, if any. The notice should include the reasons for the proposed march-in terms sufficient to place the contractor on notice of the facts upon which the action is based, and the specified field or fields of use in which the VA is considering licensing. The notice shall advise the contractor of its rights, as set forth in paragraph (c) of this section. (OMB Circular A-124, part 13(c))

(b) Within 30 days of receipt of the written notice, the contractor may submit, in person, in writing, or through a representative, information or argument in opposition to the proposed march-in. If the information presented raises a genuine dispute over material facts, the Office of the General Counsel shall either undertake the matter or refer it to another official for fact-finding. (OMB Circular A-124, part 13(d))

(c) During the fact-finding process, the contractor shall have the opportunity to appear with counsel, submit documentary evidence, present witnesses, and confront such persons as may be presented. A transcribed record of any hearing shall be made and shall be available at cost to the contractor upon request. The requirement for a transcribed record may be waived by mutual agreement of the VA and the contractor. Any portion of such hearing involving testimony or evidence concerning utilization or obtaining utilization by the contractor, its assignee, or licensee, shall be closed to the public, including potential licensees. (OMB Circular A-124, part 13(e)).

(d) The official conducting the fact-finding shall prepare written findings of fact for the Office of the General Counsel promptly after conclusion of the fact-finding proceeding. A copy shall be sent to the contractor (assignee or licensee) by registered or certified mail. (OMB Circular A-124, part 13(f)).

(e) The Office of the General Counsel shall base the determination on the facts found, any other information submitted by the contractor, and the administrative record. The Office of the General Counsel may reject only those facts found that are clearly erroneous. Written notice of the determination shall be sent to the contractor, its assignee, or licensee, by certified or registered mail within 90 days after completion of the fact-finding process or the proceedings will be deemed to have been terminated and thereafter no march-in based on the facts and reasons upon which the proceeding was initiated may be exercised. (OMB Circular A-124, part 13(g))

(f) The VA may, at any time, terminate a march-in proceeding if it is satisfied that it does not wish to exercise march-in rights. (OMB Circular A-124, part 13(f))

§ 1.644 Appeals

(a) The following actions may be appealed by the contractor to the Administrator of Veterans Affairs or designee:

(1) Any decision by the Office of the General Counsel that the United States Government shall retain title in and to the invention under the provisions of § 1.640(c). (35 U.S.C. 202(e))

(2) A refusal to grant an extension of time under § 1.639(c) or a refusal to extend any of the filing periods set forth in paragraph c.(3) of the clause of Attachment A to OMB Circular A-124.

(3) A request for conveyance of title under those conditions set forth in paragraph d. of the clause of Attachment A to OMB Circular A-124.

(4) A refusal to grant a waiver under paragraph l. of the clause of Attachment A to OMB Circular A-124.

(5) A refusal to approve an assignment under paragraph k.(1) of the clause of Attachment A to OMB Circular A-124.

(6) A refusal to approve an extension

of the exclusive license period under paragraph k.(2) of the clause of Attachment A to OMB Circular A-124. (OMB Circular A-124, part 14)

(b) The appeal shall be in writting, shall set forth with specificity the basis for the appeal and shall be postmarked within 60 calendar days of receipt of the action being appealed. If a dispute as to the factual basis for a conveyance of title under paragraph (a)(2) of this section arises, including any dispute as to whether an invention is a subject invention, will be subject to the fact-finding procedures of § 1.643. (OMB Circular A-124, part 14(b))

(c) Any decision to revoke or modify the contractor's license to the extent necessary to achieve practical application of the subject invention under paragraph e.(2) of the clause of Attachment A to OMB Circular A-124, in accordance with the procedures set forth in paragraph e.(3) of the same clause, may be appealed to the Administrator of Veterans Affairs under the provisions of § 1.666. (35 U.S.C. 202(e); OMB Circular A-124, part 14(b))

[FR Doc. 85-8705 Filed 4-11-85; 8:45 am]

BILLING CODE 8320-01-M

ENVIRONMENTAL PROTECTION AGENCY

40 CFR Part 52

[A-5-FRL-2817-3]

Approval and Promulgation of Implementation Plans; Indiana

AGENCY: Environmental Protection Agency (USEPA).

ACTION: Proposed rulemaking; Extension of the public comment period.

SUMMARY: On January 31, 1985 (50 FR 4537), USEPA proposed rulemaking on the Indiana Lake County total suspended particulate (TSP) plan. The State and the Lake County Attainment Task Force (LCATF) requested an extension to the public comment period. USEPA is extending the public comment period to May 15, 1985.

DATE: Comments must be postmarked on or before May 15, 1985.

ADDRESSES: Comments should be submitted to: Gary V. Gulezian, Chief, Regulatory Analysis Section (5AR-26), Air and Radiation Branch, Region V, U.S. Environmental Protection Agency, 230 S. Darborn Street, Chicago, Illinois 60604.

Copies of the SIP revision material and the comment period extension requests are available at the following addresses for review: (It is recommended that you telephone Robert B. Miller, at (312) 886-6031, before vising the Region V office.)

U.S. Environmental Protection Agency, Air and Radiation Branch, Region V (5AR-26), 230 S. Dearborn Street, Chicago, Illinois 60604

Indiana Air Pollution Control Division, Indiana State Board of Health, 1330 West Michigan Street, Indianapolis, Indiana 46206

FOR FURTHER INFORMATION CONTACT: Robert B. Miller, (312) 886-6031.

SUPPLEMENTARY INFORMATION: On January 31, 1985, USEPA proposed for public comment to disapprove a TSP plan for Lake County, Indiana which was developed by the LCATF and submitted by the State. A 60-day comment period was provided, and comments were due by April 1, 1985. On February 27, 1985, the State requested a 90-day extension to the public comment period because of a large amount of material that the State had collected which it wished to review prior to commenting on USEPA's proposal. On March 5, 1985, the LCATF requested a 6-month extension of the comment period until September 30, 1985, so that it could adequately comment on the technical issues. A detailed discussion of the steps that the LCATF plans to follow were included, which basically contemplated the development of a revised technical support package for the plan currently before USEPA. On March 20, 1985, the State too requested an extension to the public comment period until September 30, 1985, in order to allow for the remodeling of the Lake County area.

USEPA has reviewed the State's and the LCATF's extension requests and has determined that a 45-day extension of the public comment period until May 15, 1985 is warranted. USEPA believes that this extension should give parties ample time to comment on key issues concerning USEPA's proposed disapproval. The denial of the 6-month extension, of course, does not preclude Indiana from the development of a revised play if it so wishes, but does allow USEPA to act on the plan currently in front of it in a timely manner.

(42 U.S.C. 7410, 7502, and 7601)

Dated: April 1, 1985.

Valdas V. Adamkus,

Regional Administrator.

[FR Doc. 85-8825 Filed 4-11-85; 8:45 am]

BILLING CODE 6560-50-M

40 CFR Part 65

[A-5-FRL-2815-8]

Federal and State Administrative Orders Permitting a Delay in Compliance With State Implementation Plan Requirements; Proposed Delayed Compliance Order for C.W. Zumbiel Company

AGENCY: Environmental Protection Agency.

ACTION: Proposed rule.

SUMMARY: EPA proposes to issue an Administrative Order to C.W. Zumbiel Company ("Zumbiel"). The Order requires the company to bring volatile organic hydrocarbon emissions from its rotogravure printing lines in Norwood, Ohio, into compliance with Ohio Rule 3745-21-09(Y), part of the federally-approved Ohio State Implementation Plan (SIP). The company is unable to comply with this regulation at this time, and the proposed Order would establish an expeditious schedule requiring final compliance by November 1, 1985. Source compliance with the Order would preclude suits under the federal enforcement and citizen suit provisions of the Clean Air Act for violation of the SIP regulations covered by the Order. The purpose of this notice is to invite public comment and to offer an opportunity to request a public hearing on EPA's proposed issuance of the Order.

DATES: Written comments must be received on or before May 13, 1985. All requests for a public hearing should be accompanied by a statement of why the hearing would be beneficial and a text or summary of any proposed testimony to be offered at the hearing. If there is significant public interest in a hearing, it will be held twenty-one days after notice of the date, time, and place of the hearing which will be provided in a separate notice in the **Federal Register**.

ADDRESS: Comments and requests for a public hearing should be submitted to the Office of Regional Counsel, EPA, Region V, 230 S. Dearborn, Chicago, Illinois 60604. Material supporting the Order and public comments received in response to this notice may be inspected and copied (for appropriate charges) at this address during normal business hours.

FOR FURTHER INFORMATION CONTACT: Mr. Carey S. Rosemarin, Assistant Regional Counsel, Office of Regional Counsel (5C-16), EPA, Region V, 230 South Dearborn Street, Chicago, Illinois 60604 at (312) 353-2094.

SUPPLEMENTARY INFORMATION: Zumbiel operates package rotogravure printing lines at its facility in Norwood, Ohio. The proposed Order addresses volatile organic compound (VOC) emissions from Presses #50 (P001) and #51 (P002), both of which are subject to Ohio Rule 3745-21-09(Y), which is part of the federally-approved Ohio State Implementation Plan. That section limits the emissions of VOCs from package rotogravure printing lines.

The proposed Order requires final compliance with the emission limitations of Rule 3745-21-09(Y)(1)(b) by November 1, 1985, by the installation of add-on control equipment which complies with Rule 3745-21-09(Y)(1)(b). The Order provides that this equipment must be installed by September 15, 1985. Zumbiel has consented to the terms of the Order, and has agreed to meet the Order's increments during the period of this informal rulemaking.

The proposed Order satisfies the applicable requirements of section 113(d) of the Clean Air Act (the Act). If the Order is issued, compliance by the source with its terms would preclude further EPA enforcement action under section 113 of the Act against the source for violations of the regulation covered by the Order during the period the Order is in effect. Enforcement against the source under the citizen suit provisions of the Act (Section 304) would be similarly precluded. Zumbiel has been notified that it is subject to, and may be required to pay a noncompliance penalty under, section 120 of the Act.

Comments received by the date specified above will be considered in determining whether EPA should issue the Order. Testimony given at any public hearing concerning the Order will also be considered. After the public comment period and any public hearing, the Administrator of EPA will publish in the **Federal Register** the Agency's final action on the Order in 40 CFR Part 65.

List of Subjects in 40 CFR Part 65

Air pollution control.

Dated: March 29, 1985.

Valdas V. Adamkus,

Regional Administrator, Region V.

In consideration of the foregoing, it is proposed to amend 40 CFR Chapter 1, as follows:

PART 65—DELAYED COMPLIANCE ORDERS

By adding an entry to the Table in § 65.400, *Federal Delayed Compliance Orders*, issued under Section 113(d) (1), (3), and (4) of the Act, as follows:

Source	Location	Order No.	SIP Regulation(s) involved	Date of FEDERAL REGISTER proposal	Final compliance date
C.W. Zumbiel Co	Norwood, OH	To be assigned	Rule 3745-21-09(Y)	Date of publication of this notice	11/1/85

[42 U.S.C. 7413(d) and 7601]

[FR Doc. 85-8581 Filed 4-11-85; 8:45 am]

BILLING CODE 6560-50-M

DEPARTMENT OF HEALTH AND HUMAN SERVICES

Health Care Financing Administration

42 CFR Part 435

[BERC-297-P]

Medicaid Program; Treatment of Social Security Cost of Living Increases for Individuals Who Lose SSI Eligibility

AGENCY: Health Care Financing Administration (HCFA), HHS.

ACTION: Proposed rule.

SUMMARY: This proposal would revise current Medicaid rules for determining financial eligibility for an individual who is no longer eligible for benefits under title XVI of the Social Security Act, the Supplemental Security Income (SSI) Program, due to receipt of cost of living increases (COLAs) under section 215(i) of the Social Security Act. This change would affect categorically needy eligibility in all States by requiring that any individual who would still be entitled to benefits under the SSI program but for receipt of a section 215(i) COLA after April 1977 must be treated as if he or she were still receiving those SSI benefits. This proposal would not apply in Puerto Rico, Guam, the Virgin Islands, and American Samoa, where the SSI program is not in effect.

This proposed revision is made pursuant to a decision of the United States District Court for the Northern District of California. That decision invalidated the existing provision of the Medicaid regulations under which individuals who were no longer eligible for SSI benefits qualified for Medicaid only when a section 215(i) COLA was the specific cause of the loss of SSI benefits.

DATES: To assure consideration, comments must be received by June 11, 1985.

ADDRESS: Address comments in writing to: Health Care Financing Administration, Department of Health and Human Services, Attention: BERC-297-P, P.O. Box 26676, Baltimore, MD 21207.

If you prefer, you may deliver your comments to Room 309-G Hubert H. Humphrey Building, 200 Independence Avenue, SW., Washington, D.C., or to Room 132, East High Rise Building, 6325 Security Boulevard, Baltimore, Maryland. In commenting, please refer to BERC-297-P.

Comments will be available for public inspection as they are received, beginning approximately three weeks from today, in Room 309-G of the Department's offices at 200 Independence Avenue SW., Washington, DC., 20201, on Monday through Friday of each week from 8:30 a.m. to 5:00 p.m. (phone: 202-245-7890).

FOR FURTHER INFORMATION CONTACT: Roy Trudel, (301) 594-9128.

SUPPLEMENTARY INFORMATION:

I. Background

Under section 1902(a)(10)(A) of the Social Security Act (the Act), 42 U.S.C. 1396a(a)(10)(A), in most States an individual who receives supplemental security income (SSI) under title XVI of the Act is eligible for Medicaid as a categorically needy individual. Under section 212(a) of Pub. L. 93-66, 42 U.S.C. 1382 (note), a State must provide an eligible aged, blind, or disabled individual with a State supplementary payment (SSP) if that individual received State assistance for the aged, blind, or disabled in December 1973 and his or her income for that month exceeded the amount later received under SSI, plus other income. Under Medicaid regulations at 42 CFR 435.130, a State must provide categorically needy coverage to an individual receiving such a mandatory SSP. This means that under Medicaid an individual who receives a mandatory SSP is treated as if he or she receives SSI.

In addition, under section 1616(a) of the Act, 42 U.S.C. 1382e(a), a state may choose to provide an optional SSP based on need to an individual who is eligible for SSI or would be eligible for SSI except for his or her income. Under section 1902(a)(10)(A)(ii)(IV) of the Act,

42 U.S.C. 1396a(a)(10)(A)(ii)(IV), and Medicaid regulations at 42 CFR 435.230, an individual who receives an optional SSP and who would be eligible for SSI except for his or her income, may be covered by a State as an optional categorically needy individual. (In the following discussion, the term "SSI" includes mandatory and optional SSP as well; and "loss of SSI" means loss of all such benefits the individual was receiving.)

Some SSI recipients also receive cash payments under title II of the Act, Federal Old-Age, Survivors, and Disabled Insurance Benefits (OASDI" or "social security"), in amounts low enough that they continue to meet the income eligibility criteria for the SSI program. As OASDI recipients, these individuals receive annual OASDI cost of living increases (COLAs) including those provided for in section 215(i) of the Act, 42 U.S.C. 415(i). Under general Medicaid rules, if this annual increase raises a recipient's income above the SSI limit, disqualifying that individual from further benefits under the SSI program, the result could be the loss of categorically needy eligibility for Medicaid benefits. To address this issue, in 1977 Congress enacted section 503 of Pub. L. 94-566, 42 U.S.C. 1396a (note), (commonly known as the "Pickle amendment), so that an OASDI COLA made under section 215(i) of the Act does not result in loss of Medicaid, even though receipt of the COLA did result in the loss of SSI.

Because we believed that Congress intended this amendment to mean that section 215(i) COLAs would be excluded in calculating Medicaid eligibility only when such an increase was the specific cause of the loss of SSI, we went through notice and comment rulemaking and issued regulations to that effect.

II. Court Orders

In 1981 in *Ciampa* v. *Schweiker*, 511 F. Supp. 670 (D. Mass. 1981), the United States District Court for the District of Massachusetts ordered us to provide categorically needy Medicaid coverage to individuals who reside in Massachusetts who once received Medicaid because of their entitlement to SSI, whenever they would requalify for these benefits "but for" section 215(i) COLAs paid after April 1977. This means that if a former Medicaid recipient who is currently ineligible for SSI for any reason, would still be eligible for SSI "but for" the amount of income from section 215(i) COLAs received since April 1977 by the individual after the last month he or she was both eligible for and received SSI benefits and was entitled to OASDI, then that individual is still eligible for categorically needy Medicaid benefits. That decision was affirmed by the Court of Appeals for the First Circuit in *Ciampa* v. *Secretary of Health and Human Services*, 687 F.2d 518 (1st Cir. 1982). We therefore substituted this "but for" test for the previously used "solely" test in Massachusetts.

In 1984, the United States District Court for the Northern District of California considered the same issue, certified a nationwide class (except for individuals who were already under the "but for" test), and ordered the Secretary to rescind the regulations at 42 CFR 435.135 that govern the effect of section 215(i) COLAs on the determination of categorically needy eligibility under Medicaid. (*Lynch* v. *Rank*, Civil Action No. 83-2340 (N.D. Cal. March 9, 1984)). That court also ordered us to prepare new regulations consistent with the findings of the Court of Appeals in the *Ciampa* case. Thus, as required by the United States District Court for the Northern District of California, we would amend our regulations to provide that an individual, who is not now eligible for SSI but would be eligible for SSI if section 215(i) COLAs received after April 1977 after the individual's last month of eligibility for and receipt of SSI as well as entitlement to OASDI were ignored in counting the individual's income, must be treated as an SSI recipient for purposes of determining categorically needy eligibility under Medicaid.

In addition, as required by the *Lynch* Court, we have notified the States that they are to stop applying the "solely" test and instead to substitute the "but for" test. This proposal is consistent with that notice. The *Lynch* decision was recently affirmed by the Court of Appeals for the Ninth Circuit in *Lynch* v. *Rank*, 747 F.2d 528 (9th Cir. 1984).

III. States That Do Not Follow SSI Rules in Establishing Medicaid Eligibility

Under section 1902(f) of the Act, 42 U.S.C. 1396a(f), as enacted by section 209(b) of Pub. L. 92-603, a State may use more restrictive Medicaid eligibility criteria for the aged, blind, and disabled than those applied nationally for determining eligibility under SSI. A State may choose to cover only those individuals who would have been eligible under the criteria of its Medicaid plan in effect on January 1, 1972, or a State may employ criteria different than its January 1, 1972 plan, but not more liberal than current SSI criteria. Thus, in the 14 States currently applying the 1902(f) option ("1902(f) States"), eligibility for SSI benefits does not automatically guarantee Medicaid eligibility because these States may apply a more restrictive test for categorically needy eligibility. Because the *Lynch* Court specifically stated that its decision applied to all States except Massachusetts, States that do not base Medicaid eligibility on SSI eligibility must nonetheless treat individuals covered by the Pickle amendment (as defined by these regulations) in the same manner as they would treat SSI recipients for Medicaid eligibility purposes. (This does not necessarily guarantee eligibility for Medicaid, because, in 1902(f) States, SSI recipients only receive Medicaid under certain conditions.)

IV. Proposed Changes to the Regulations

We would revise 42 CFR 435.135 to specify that in determining categorically needy eligibility for Medicaid, States must treat an individual as if he or she were receiving SSI if he or she—

(1) Is receiving OASDI benefits;

(2) Was receiving SSI but became ineligible for those payments after April 1977; and

(3) Would still be eligible for SSI if the section 215(i) COLAs received since April 1977 after the last month of both eligibility for and receipt of SSI and entitlement to OASDI were not counted as income.

Even though the express terms of the current 42 CFR 435.135 refer to individuals who were receiving SSI or optional SSP only, it has always been our intent that this section apply to individuals who were receiving mandatory SSP as well. This is because under 42 CFR 435.130, States must provide Medicaid to individuals receiving mandatory SSP, and thus for this purpose must treat individuals who receive mandatory SSP as if they were receiving SSI. We are changing the regulation at 42 CFR 435.135 by eliminating the word "optional" to clarify that it applies to individuals who received SSI, mandatory SSP, or optional SSP.

We have clarified the wording of 42 CFR 435.135(a) to indicate that only COLAs received *after* the last month of both eligibility for and receipt of SSI and entitlement to OASDI would not be counted as income. Although this is the same policy as in the current regulation, it may not have been stated clearly.

In addition, we would make editorial changes to remove gender-specific language in 42 CFR 435.135.

V. Regulatory Impact Statement

A. Executive Order 12291

Executive Order 12291 requires us to prepare and publish a regulatory impact analysis for any regulations that are likely to have an annual effect on the economy of $100 million or more, cause a major increase in costs or prices, or meet other threshold criteria that are specified in the Executive Order.

As noted previously, we are required to publish proposed rules for determining categorically needy eligibility under Medicaid for individuals not currently eligible for SSI who would be eligible for SSI but for the receipt of OASDI COLAs under section 215(i) of the Act after April 1977. These individuals were dually entitled to OASDI and SSI, but lost their SSI benefits sometime after April 1977. If section 215(i) COLAs received after the last month of receipt of SSI after April 1977 were not counted as income, these individuals would be eligible for SSI and thus possibly eligible for categorically needy Medicaid benefits. (Other individuals who lost categorically needy eligibility solely because of receipt of section 215(i) COLAs would not be affected by this proposal because their eligibility has been protected under existing regulations.)

This change would restore categorically needy Medicaid eligibility to a number of individuals. Current estimates suggest that 500,000 or more individuals nationwide may have to be contacted to identify those who would still be eligible but for receipt of section 215(i) COLAs. We expect that many of those identified during the screening will be found to be unaffected by this proposal, even if its requirements had been applied at the time they lost their eligibility. In addition, some of those who would have retained categorically needy eligibility will not be affected at this time due to institutionalization, death, or other changes of circumstances.

Based on the data currently available to us, we estimate that implementation of this proposal would restore categorically needy eligibility to about 20,000 aged or disabled individuals who have lost categorically needy eligibility since 1977, and who have not become otherwise eligible for Medicaid benefits. In addition, this proposed change would result in about 3,000 to 4,000 individuals per year retaining categorically needy eligibility that they would lose under the current regulations. Medicaid enrollment for FY 1985 is projected to be 22.9 million, 6.3 million of whom are aged or disabled. Thus, we estimate that, during the first year, implementation of this proposal would increase total Medicaid enrollment by less than 0.1 percent and would increase aged and disabled Medicaid enrollment by about 0.3 percent.

Each additional individual who becomes categorically eligible for Medicaid under these rules would increase Federal Medicaid expenditures by an amount less than the estimated average annual Medicaid cost for all recipients, since the characteristics of the affected individuals are such that we know that they are most likely not institutionalized, and that nearly all have Medicare, which acts as primary payor for dually eligible individuals. In addition, many of the individuals who may have been denied categorically needy eligibility receive Medicaid benefits under the medically needy eligibility option that is available in 34 States, and the change of their status under this proposed rule would have a negligible effect on program costs. We estimate that implementation of this proposal would increase Federal Medicaid expenditures by about $5 million the first year. Even using pessimistic assumptions about the size of the group affected, we project that it would be highly unlikely that our estimate of Medicaid costs, as shown below, would triple. We project that Federal Medicaid expenditures would increase as follows over the next several years. State expenditures would increase correspondingly.

Fiscal year	Federal expenditure increase [1]
1985	$5
1986	10
1987	15

[1] These estimates are rounded to the nearest $5 million.

These increased expenditures would have some economic impact in that they would, to some extent, result in increased Medicaid revenues received by providers and reduce out-of-pocket medical costs for the affected individuals. However, we have determined that these effects would not meet any of the Executive Order criteria for identifying major rules. Therefore, a regulatory impact analysis is not required.

B. Regulatory Flexibility Act

The Regulatory Flexibility Act of 1980, Pub. L. 96-354, requires us to prepare and publish a regulatory flexibility analysis for regulations unless the Secretary certifies that the regulations will not have a significant economic impact on a substantial number of small entities. As defined by the Regulatory Flexibility Act, a "small entity" includes the term "small governmental jurisdiction", which means "governments of cities, counties, towns, townships, villages, school districts or special districts, with a population of less than fifty thousand." States are not included in this definition. In addition, since they are individuals, Medicaid recipients are not considered small entities under the Regulatory Flexibility Act. However, all nonprofit and most for-profit providers of Medicaid services are considered small entities under the Regulatory Flexibility Act. In determining whether a regulatory flexibility analysis is required, we must, therefore, consider whether this change would have a significant impact on a substantial number of providers.

Generally, we consider a proposal to have a significant impact on a group of entities if it would affect their total revenues by 3 percent or more. Currently, about 20,000 individuals and entities provide medical services under Medicaid. In FY 1982, these providers were paid a total of nearly $30 billion. We assume that, absent any information to the contrary, any additional income resulting from this proposed change would be distributed among all providers in the same proportion as their current Medicaid income. Lacking data on total revenue for all 20,000 potentially affected providers, we considered whether this proposal would affect their aggregate annual Medicaid income by 3 percent.

We believe it would be highly unlikely that this proposal would increase Medicaid enrollment or expenditures by 3 percent, even in view of the difficulty in determining with certainty the number of individuals whose eligibility status would be affected. As discussed above, we estimate that the first year effects of implementing this proposal would be to increase Medicaid enrollment by less that 0.1 percent, and to increase Federal Medicaid expenditures by about $5 million. Neither of these would constitute or produce a significant economic impact on the aggregate Medicaid revenues of providers. For these reasons, we have determined and the Secretary certifies, under 5 U.S.C. 605(b), that this proposed rule would not result in a significant impact on a substantial number of small entities. Therefore, a regulatory flexibility analysis is not required.

VI. Response to Comments

Because of the large number of comments we receive on proposed regulations, we cannot acknowledge or

respond to them individually. However, in preparing the final rule, we will consider all comments received timely and respond to them in the preamble of the rule.

List of Subjects in 42 CFR Part 435

Aid to Families with Dependent Children, Aliens, Categorically needy, Contracts (Agreements—State Plan), Eligibility, Grant-in-Aid program—health, Health facilities, Medicaid, Medically needy, Reporting requirements, Spend-down, Supplemental security income (SSI).

CHAPTER IV—HEALTH CARE FINANCING ADMINISTRATION, DEPARTMENT OF HEALTH AND HUMAN SERVICES

PART 435—ELIGIBILITY IN THE STATES, DISTRICT OF COLUMBIA AND THE NORTHERN MARIANA ISLANDS

42 CFR Part 435 would be amended as set forth below:

1. The authority citation reads as follows:

Authority: Sec. 1102 of the Social Security Act (42 U.S.C. 1302).

2. Section 435.135 is revised to read as follows:

§ 435.135 Individuals who become ineligible for cash assistance as a result of OASDI cost-of-living increases received after April 1977.

(a) If an agency provides Medicaid to aged, blind, or disabled individuals receiving SSI or State supplements, it must provide Medicaid to individuals who—

(1) Are receiving OASDI;

(2) Were receiving SSI or State supplements but become ineligible for those payments after April 1977; and

(3) Would still be eligible for SSI or State supplements if the mount of OASDI cost-of-living increases paid under section 215(i) of the Act, after the last month after April 1977 for which those individuals were both eligible for and received SSI or a State supplement and were entitled to OASDI, were deducted from income.

(b) Cost-of-living increases include the increases received by the individual or his or her financially responsible spouse.

(c) If the agency adopts more restrictive eligibility requirements than those under SSI, it must provide Medicaid to individuals specified in paragraph (a) of this section on the same basis a Medicaid is provided to individuals continuing to receive SSI or State supplements. If the individual incurs enough medical expenses to reduce his or her income to the financial eligibility standard for the categorically needy, the agency must cover that individual as categorically needy. In determining the amount of his or her income, the agency may deduct the cost-of-living increases paid under section 215(i) after the last month after April 1977 for which that individual was both eligible for and received SSI or a State supplement and was entitled to OASDI.

(Catalog of Federal Domestic Assistance Program No. 13.714, Medical Assistance Program)

Dated: January 15, 1985.

Carolyne K. Davis,

Administrator, Health Care Financing Administration.

Approved: March 22, 1985.

Margaret M. Heckler,

Secretary.

[FR Doc. 85-8792 Filed 4-11-85; 8:45 am]

BILLING CODE 4120-03-M

DEPARTMENT OF TRANSPORTATION

National Highway Traffic Safety Administration

49 CFR Part 575

[Docket No. 25; Notice 59]

Uniform Tire Quality Grading Standards; Denial of Petition for Reconsideration

AGENCY: National Highway Traffic Safety Administration (NHTSA) DOT.

ACTION: Denial of petitions for reconsideration.

SUMMARY: On December 19, 1984, this agency published a final rule reinstituting treadwear grading requirements under the Uniform Tire Quality Grading Standards (UTQGS). The schedule set forth in that rule for reinstituting those requirements was identical to the schedule which the United States Court of Appeals for the District of Columbia Circuit ordered the agency to adopt.

Petitions for reconstruction of that rule were filed on January 17 and 18, 1985. The petitions stated that the postponement of parts of the schedule was necessary because the grades which would be achieved by these two types of tires, when measured against the new course monitoring tires (CMT's) in conjunction with the new base course wear rates (BCWR's), would be substantially lower than the grades which would have been achieved had the same tires been measured against the old CMT's and the old BCWR's. The petitions claimed that this would result in much lower grades for tires which had undergone no appreciable design changes, and lead to the anomaly where bias ply tires, which traditionally had been assigned the lowest treadwear grades, would now be graded higher than many, if not most, bias belted and radial tires.

NHTSA promptly initiated its own testing to learn if these concerns were well-founded. This testing showed that the agency's departure from its previous practice of calculating the BCWR by relating the wear rate of the new CMT's to the wear rate of the old CMT's had indeed created the problems reported by petitioners. Based on the results of that testing, NHTSA made adjustment to the BCWR's assigned to the new bias belted and radial CMT's. These adjustments solved the problem noted by the petitioners without necessitating a postponement of the effective dates set forth in the December 19 final rule.

For this reason and because NHTSA is unaware of any other reasons for postponing those dates, the petitions are denied.

FOR FURTHER INFORMATION CONTACT: William Boehly, Office of Market Incentives, NHTSA, 400 Seventh Street, SW., Washington, D.C. 20590 (202-426-1740).

SUPPLEMENTARY INFORMATION: NHTSA suspended treadwear grading requirements under the UTQGS at 48 FR 5690, February 7, 1983. This action was taken after the agency found high levels of variability in treadwear test results and in the grade assignment practices of the various tire manufacturers. This variability resulted in a substantial likelihood that treadwear information being provided to the public under this program would be misleading, i.e., that the assigned grades could, in many instances, incorrectly rank the actual treadwear performance of different tires.

On April 24, 1984, the United States Court of Appeals for the District of Columbia Circuit vacated the agency's suspenion of the treadwear grading requirements in *Public Citizen* v. *Steed*, 733 F.2d 93. That same court issued an order of October 31, 1984, directing NHTSA to reinstitute treadwear grading according to the following schedule.

SCHEDULE

	Bias ply tires	Bias belted tires	Radial tires
Tire manufacturers complete testing	Nov. 7, 1984	Feb. 1, 1985	Mar. 1, 1985.
Affix paper labels and submit brochures to NHTSA for review	Dec. 15, 1984	Mar. 1, 1985	Apr. 1, 1985.
Distribute brochures to the public	Jan. 15, 1985	Apr. 1, 1985	May 1, 1985.
Modify all molds to include treadwear	May 15, 1985	Aug. 1, 1985	Sept. 1, 1985.
Include treadwear grading in vehicle manufacturer's consumer information booklet.	Sept. 1, 1985	Sept. 1, 1985	Do.

NHTSA published a final rule reinstituting the treadwear grading requirements under UTQGS at 49 FR 49293, December 19, 1984. The schedule set forth in that rule for reinstituting those requirements was identical to the schedule set forth in the court's October 31 order.

Petitions for reconsideration of the effective dates set forth for bias belted and radial tires in the December 19 final rule were filed by the Goodyear Tire & Rubber Company on January 17, 1985, and by the Rubber Manufacturers Association (RMA) on January 18, 1985. These petitions sought a delay in the effective dates of the treadwear grading requirements for the bias belted and radial tires. They argued that the new CMT's for these tire types, when used in conjunction with the new BCWR's, would result in treadwear grades which were substantially lower than the grades which would have been achieved by the same tires if the old CMT's and the old BCWR's were used. According to RMA's petition, this would result in the establishment of a new treadwear grading system, rather than a simple reimplementation of the previous grading system.

The test results and other data presented in support of the RMA's petition for reconsideration indicated that the treadwear grades to be assigned these tire types using the new course monitoring tires and the new base course wear rates were significantly lower than NHTSA had anticipated. Petitioners claim that this would result in much lower grades for tires which had undergone no appreciable design changes, and lead to the anomaly where bias ply tires, which traditionally had been assigned the lowest treadwear grades, would now be graded higher than many, if not most, bias belted and radial tires. Given these contentions, NHTSA promptly instituted its own testing to see if the concerns were well-founded. This testing showed that the agency's departure from its previous practice of calculating the BCWR for a new CMT by relating the wear rate of the new CMI's to the wear rate of the old CMT's created the problems reported by the petitioners.

NHTSA's testing of the bias belted course monitoring tires began on January 22, 1985, and ended on January 30. As a result of its testing, NHTSA announced on January 31, 1985, that the base course wear rate for the new bias belted course monitoring tires was changed from the previously assigned level of 10.62 mils per 1000 miles to 6.94 mils per 1000 miles. NHTSA's testing of the radial course monitoring tires began on January 31, 1985, and ended on February 25. The testing let NHTSA to announce on February 26, 1985, that the base course wear rate for the new radial course monitoring tires was changed from the previously assigned level of 4.45 mils per 1000 miles to 2.89 mils per 1000 miles.

The agency believes that these adjustments to the base course wear rates for bias belted and radial tires will result in those tires achieving treadwear grades comparable to those which they would have achieved if measured against the old course monitoring tires and the old base course wear rates. Moreover, these adjustments were made promptly enough so that there was no need for the agency to consider seeking a postponement of the dates for reinstituting the treadwear grading requirements.

In view of the foregoing, the agency is denying the petitions for reconsideration. Without justificaton for a postponement, the agency can neither seek a change in the court's October 31 order, a prerequisite to rulemaking, nor conduct rulemaking to postpone any dates adopted in the December 19 final rule. The adjustments to base course wear rates removed any basis in the petitions for postponing the dates for reinstituting treadwear grading for bias belted and radial tires. Since the agency is unaware of any other reason that would justify postponing those dates, NHTSA is not taking any action to change the schedule in the court's October 31 order or the agency's December 19 final rule.

(Secs. 103 and 119, Pub. L. 89-563, 80 Stat. 718 (15 U.S.C. 1392 and 1407); delegation of authority at 49 CFR 1.50)

Issued on April 9, 1985.

Diane K. Steed,

Administrator.

[FR Doc. 85-8899 Filed 4-9-85; 5:03 pm]

BILLING CODE 4910-59-M

INTERSTATE COMMERCE COMMISSION

49 CFR Part 1152

[Ex Parte No. 274 (Sub-14)]

Rail Abandonments; Offers of Financial Assistance

AGENCY: Interstate Commerce Commission.

ACTION: Notice of proposed rulemaking.

SUMMARY: The Commission proposes to modify its regulations at 49 CFR 1152.27 governing offers of financial assistance under 49 U.S.C. 10905. The proposed regulations require offerors to submit the evidence in support of their requests to set terms with that request. Reply evidence is to be submitted 15 days later and rebuttal evidence would be permitted 10 days after the replies are filed. This will enable the Commission to meet statutory deadlines and analyze the evidence of record.

DATES: Comments are due on June 11, 1985.

ADDRESSES: An original and 15 copies of comments referring to Ex Parte No. 274 (Sub-No. 14) should be sent to:.

Office of the Secretary, Case Control Branch, Interstate Commerce Commission, Washington, DC 20423.

FOR FURTHER INFORMATION CONTACT:

Louis E. Gitomer, (202) 275-7245;

or

Wayne A. Michel, (202) 275-7657.

SUPPLEMENTARY INFORMATION: The text of the proposed rules follows as an appendix to this notice. Additional information is contained in the Commission's full decision. To obtain a copy of the full decision contact Office of the Secretary, Room 2215, Interstate Commerce Commission, Washington, DC 20423, or call (202) 275-7428..

This action will not significantly affect either the quality of the human environment or energy conservation. This rule will not have a significant economic impact on a substantial number of small entities because the general purpose is to protect the rights of parties to have balanced and quick resolution to their request to have the Commission set the terms for sale or subsidy.

List of Subjects in 49 CFR Part 1152

Administrative practice and procedures, Railroads.

This rulemaking notice is issued under the authority of 5 U.S.C. 553 and 49 U.S.C. 10321 and 10905.

Dated: April 1, 1985.

By the Commission, Chairman Taylor, Vice Chairman Gradison, Commissioners Sterrett, Andre, Simmons, Lamboley and Strenio.

James H. Bayne,

Secretary.

Appendix

Title 49 of the CFR is proposed to be amended as follows:

PART 1152—[AMENDED]

Section 1152.27 is proposed to be amended by revising paragraph (h)(4) to read as follows:

§ 1152.27 Financial assistance procedures.

* * * * *

(h) * * *

(4) All evidence and information supporting the request to set terms must be submitted with the request. Replies to this evidence are due within 15 days of the request. Rebuttal evidence may be submitted up to 25 days after the request was filed. Evidence and information submitted after these dates may be rejected.

* * * * *

[FR Doc. 85-8905 Filed 4-11-85; 8:45 am]

BILLING CODE 7035-01-M

DEPARTMENT OF THE INTERIOR

Fish and Wildlife Service

50 CFR Part 23

Foreign Proposals To Amend Appendices to the Convention on International Trade in Endangered Species of Wild Fauna and Flora

AGENCY: Fish and Wildlife Service, Interior.

ACTION: Notice of decision.

SUMMARY: The Convention on International Trade in Endangered Species of Wild Fauna and Flora (CITES) regulates international shipment of certain wildlife and plant species, which are listed in appendices to this 89-nation treaty. Any nation that is a Party to CITES May propose amendments to Appendix I or II for consideration by the other Parties.

This notice announces decisions by the Fish and Wildlife Service on negotiating positions to be taken by the United States delegation with regard to proposals submitted by Parties other than the United States. The proposals will be considered in April and May 1985 at the fifth regular meeting of the Parties in Buenos Aires, Argentina.

DATE: Proposals discussed in this notice will be subject to voting by Party nations on May 2 and 3, 1985. Any of these proposals that are adopted will enter into effect 90 days later (i.e., on August 1, 1985).

ADDRESS: Please send correspondence concerning this notice to the Office of Scientific Authority, U.S. Fish and Wildlife Service, Washington, DC 20240. Materials received will be available for public inspection from 7:45 a.m. to 4:15 p.m., Monday through Friday, in room 537, 1717 H Street, NW, Washington, DC.

FOR FURTHER INFORMATION CONTACT: Dr. Richard L. Jachowski, Office of Scientific Authority, U.S. Fish and Wildlife Service, Washington, DC 20240, telephone (202) 653-5948, fts 653-5948.

SUPPLEMENTARY INFORMATION:

Background

CITES regulates import, export, reexport and introduction from the sea of certain animal and plant species. Species for which trade is controlled are included in three appendices. Appendix I includes species threatened with extinction that are or may be affected by trade. Appendix II includes species that although not necessarily threatened with extinction may become so unless trade in them is strictly controlled. It also lists species that must be subject to regulation in order that trade in other currently or potentially threatened species may be brought under effective control (e.g., because of difficulty in distinguishing specimens of currently or potentially threatened species from those of other species). Appendix III includes species that any Party nation identifies as being subject to regulation within its jurisdiction for purposes of preventing or restricting exploitation and for which it needs cooperation of other Parties in controlling trade.

Any Party nation may propose amendments to Appendices I and II for consideration at meetings of the Conference of the Parties. The text of any proposal must be communicated to the CITES Seretariat at least 150 days before the meeting. The Secretariat must then consult the other Parties and interested intergovernmental bodies and communicate their responses to all Parties no later than 30 days before the meeting. Amendments are adopted by a two-thirds majority of the Parties present and voting.

Decisions

This notice announces negotiating positions to be taken by the United States delegation with regard to proposals submitted by Parties other than the United States for consideration at the forthcoming meeting of the Parties. The Service announced the proposals and invited comments on tentative negotiating positions in the February 7, 1985, **Federal Register** (50 FR 5279). Proposals submitted by the United States were described in the December 14, 1984, **Federal Register** (49 FR 48775).

It is neither practical nor in the best interests of the United States to establish inflexible negotiating positions on proposals in advance of the meeting. However, decisions announced in this notice represent formal guidance to the delegation, which will seek to obtain agreement of the Conference of the Parties with these positions. Such positions will only be modified if the U.S. delegation finds it necessary to do so in response to new information during the meeting in Argentina.

Comments Received

The Service received verbal comments at a public meeting on February 13, 1985, and written comments in response to the February 7, 1985, Federal Register notice. These comments and the Service's response to them are discussed below.

1. *Mammals*—Dr. S. McGreal of the International Primate Protection League transmitted comments from Dr. B. Hrdy in opposition to the proposed transfer of the gray or Hanuman langur (*Presbytis entellus*) from Appendix I to Appendix II. Dr. Hrdy stated that increasing human pressure means that every population of langurs near a settled area is potentially endangered. The Service anticipates that the langurs are likely to be affected by such human pressure, but notes that *P. entellus* is not currently threatened with extinction and, therefore, would be more appropriately listed in Appendix II. There is no evidence that such a transfer would result in greater international trade in this species.

The Marine Mammal Commission, Dr. J. Grandy of the Humane Society of the United States, and Mr. C. Van Note of Monitor commented in support of the proposed transfer of the narwhal (*Monodon monoceros*) from Appendix II to Appendix I. The Marine Mammal Commission and Mrs. C. Stevens of the Society for Animal Protective Legislation commented in support of adding the hooded seal (*Cystophora cristata*) to Appendix II. The Service

agrees with these comments, based on currently available information. New information that Canada recently supplied on the population status of these species and the trade in them is under review and will be considered by the U.S. delegation.

The Wildlife Conservation and Management Committee of the American Association of Zoological Parks and Aquariums (AAZPA) commented in opposition to the proposed transfer of the Chinese population of the leopard cat (*Felis bengalensis bengalensis*) and the entire species of Asiatic black bear (*Selenarctos thibetanus*) from Appendix I to Appendix II, on the grounds that this move could further threaten populations of these animals in other parts of their range. The same views were expressed by the New York Zoological Society, TRAFFIC (U.S.A.) (with respect to the bear only), and by Mr. E.D. Asper of Sea World of Florida.

In response, the Service has decided to oppose the proposal on the bear unless evidence of satisfactory population status is presented in support of the transfer from other countries in which it occurs. Regulation of trade in leopard cats at the subspecies level is made difficult by identification problems; pelts of the different subspecies are almost indistinguishable. *F. b. bengalensis* is now listed in Appendix I, but all 4 or 5 other subspecies are in Appendix II. Thus, transfer of the Chinese population of *F. b. bengalensis* to Appendix II should not have much effect on populations of these animals in other parts of their range. The Service intends to support this proposal.

Mr. D.E. Moore of the Burnet Park Zoo in Liverpool, New York, supplied information on trade in the fennec fox (*Vulpes (Fennecus) zerda*) as pets, and urged that the United States support a proposal to add the species to Appendix II. Mr. Moore indicated that he had been unable to find any data on the status of wild fennec populations, which is one reason the Service tentatively opposed the proposal. If information about population status becomes available, the U.S. delegation might support the proposal, but not otherwise. The current inclusion of this species in Appendix III by Tunisia appears to be more appropriate.

2. *Birds*—The Wildlife Conservation and Management Committee of AAZPA, the New York Zoological Society, and Mr. E.D. Asper of Sea World commented in support of the proposed transfer of the scarlet macaw (*Ara macao*) from Appendix II to Appendix I. AAZPA noted that while the species is not endangered throughout its range, some populations are certainly in trouble and need protection. The Service notes that listing the species in Appendix I could reduce the threat of trade for those populations at risk, but also that the species as a whole does not appear to be currently threatened. Under these circumstances, the Service finds it difficult to support the proposal in the absence of information from countries in which the species occurs, other than from the proponent, Costa Rica.

TRAFFIC (U.S.A.) commented, with respect to the proposed transfer of the great green macaw (*Ara ambigua*), from Appendix II to Appendix I, that the species has a fairly restricted range and that populations are reported as suffering from habitat loss, but that there does not appear to be significant trade demand for the species on the basis of U.S. import data. The Service finds that the proposal does not present a strong case for Appendix I listing, but that on balance, such listing appears to be appropriate.

Support for the proposed transfer of the North American gyrfalcon (*Falco rusticolus*) population from Appendix II to Appendix I were voiced by Ms. F. Lipscombe of the National Audubon Society and by TRAFFIC (U.S.A.). Comments in opposition to the proposal were submitted by Dr. T.J. Cade of Cornell University, Mr. R.B. Berry of the North American Raptor Breeders' Association, Mr. R. Thacker of the North American Falconers Association, and Mr. J.H. Glass of the Wildlife Legislative Fund of America.

Comments in favor of the proposal were (1) there appears to be a fairly widespread practice of declaring wild-caught gyrfalcons to be captive-bred in order to obtain CITES certificates; (2) there is a relatively high volume of trade in these birds in various world markets; (3) there are apparently illegal trade problems; and (4) there is similarity in appearance to the Appendix I Eurasian gyrfalcon.

Comments against the proposal were (1) the best available information about the population status of gyrfalcons indicates that the entire species is not threatened with extinction and should not be listed in Appendix I; (2) the species should be managed as a renewable resource by issuing a reasonable number of licenses each year for legal taking by falconers for personal use and not for commercial purposes; (3) there is no evidence that taking, either legal or illegal, has been a cause for decline in gyrfalcon populations; (4) listing in Appendix I will encourage illegal trade; and (5) the population should be kept in Appendix II to facilitate legal trade in captive-produced birds.

The Service's previous tentative position was to support the proposal on the basis of law enforcement concerns. However, there is no indication that the present Appendix II listing of North American gyrfalcons has, in itself, caused enforcement problems. The Service finds that the best available biological information supports the continued listing of this gyrfalcon population in Appendix II, not Appendix I. Regulatory mechanisms exist in CITES to prevent such listing from jeopardizing other gyrfalcon populations listed in Appendix I.

Opposition to the proposed transfer of the laggar falcon (*Falco jugger*) from Appendix II to Appendix I was stated by Dr. T. Cade and Mr. R. Berry, on the grounds that it is a common and widespread species, and by TRAFFIC (U.S.A.), who noted that population information is lacking and there does not appear to be a significant trade demand for the species. The proposal by India supplies almost no information; limited information now available to the Service indicates that this species is more appropriately listed in Appendix II.

Comments on the proposed addition of the jabiru stork (*Jabiru mycteria*) to Appendix I were submitted by TRAFFIC (U.S.A.), to the effect that there appears to be very little trade demand and the species is seemingly stable in much of South America. The Service has found that the available information does not support the proposed listing.

3. *Reptiles and Amphibians*—The Service received 21 written and 2 verbal comments in opposition to various proposals to transfer various populations of green sea turtles (*Chelonia mydas*) and hawksbill sea turtles (*Eretmochelys imbricata*) from Appendix I to Appendix II. Main points raised in these comments were (1) proposals by Indonesia and the Seychelles are not supported by biological information; (2) the Suriname ranching of green sea turtles affects a regional resource, rather than a national one, it might involve excessive harvest of eggs, and it does not provide an adequate marking scheme for products; (3) the French proposal on ranching of green sea turtles in Europa and Tromelin does not consider differences in reproductive success between the two islands, it identifies only speculative conservation benefits, and the marking scheme is inadequate; (4) the United Kingdom's proposal on ranching of green sea turtles depends on rejuvenation of a U.S. market that the

ranch will not be able to satisfy fully, conservation benefits of the ranch do not depend on international trade, and the marking scheme is inadequate; and (5) national and international efforts to curb deleterious taking and trade in sea turtles would be undercut if trade in products from certain populations were allowed.

The Service also received two written comments and one verbal comment in favor of the United Kingdom's ranching proposal for green sea turtles. Main points of these comments were (1) the ranch (Cayman Turtle farm) has exceeded the requirements of the CITES resolution on ranching; (2) commercial utilization can be a positive force in conservation of such wildlife; and (3) research and a turtle release program at the ranch potentially benefit the species.

The Service's decision, considering these comments and other information, is to support the ranching proposals by France and the United Kingdom, and to oppose proposals by Suriname on ranching of green sea turtles and by Indonesia and the Seychelles to transfer wild populations of green and hawksbill sea turtles to Appendix II. The French and United Kingdom proposals appear to meet the criteria of the resolution on ranching. The remaining questions about biological concerns and marking schemes are relatively minor and might be possible to resolve at the meeting in Argentina. The United States has introduced a draft resolution on a uniform marking scheme that is designed to minimize enforcement problems in distinguishing ranched products from wild-collected ones. As for the remaining proposals, the Service has received information that the Suriname ranch has ceased operations, and the available biological information does not support the Indonesian and Seychelles proposals.

In addition to comments on sea turtles, the Service also received several comments on proposals concerning other reptiles and amphibians. The Wildlife Conservation and Management Committee of AAZPA, the New York Zoological Society, Sea World, and the Animal Protection Institute of America commented in opposition to a proposal to transfer Australian salt-water crocodiles subject to ranching from Appendix I to Appendix II. The only reason given was that the legal trade could stimulate illegal trade. However, Papua New Guinea's population of this species already is on Appendix II, so it is not likely that moving the Australian population to that appendix would do much to stimulate further illegal trade. TRAFFIC (U.S.A.) commented that the proposal is sound, but that the U.S. delegation should consider additional safeguards on take and export by Australia. The Service has decided to support Australia's proposal, and will provide guidance to the U.S. delegation to discuss such safeguards.

Comments in opposition to proposals to transfer Nile crocodiles from Appendix I to Appendix II were made by the Florida Game and Fresh Water Fish Commission, the American Society of Ichthyologists and Herpetologists, TRAFFIC (U.S.A.), and the Animal Protection Institute of America. The thrust of the comments was that a status change to permit crocodile harvest cannot be supported without first obtaining suitable scientific information and establishing reliable and enforceable trade controls. The Service agrees with these views.

Opposition to the transfer of four species or subspecies of Asian freshwater turtles from Appendix I to Appendix II was stated by the Wildlife Conservation and Management Committee of AAZPA, the New York Zoological Society, and Mr. E.D. Asper of Sea World. Reasons given by AAZPA were that these downlistings would stimulate and open up trade in these species, which was a major cause in the original decline, and that population data do not indicate that such action would be in the best long-term interest of the species.

On the other hand, the American Association of Ichthyologists and Herpetologists recommended support for these proposals on the basis of studies indicating that the species are not in danger of extinction. TRAFFIC (U.S.A.) wrote that the turtles are exploited in Bangladesh for domestic consumption and export, and recommended that the trade monitoring issue be discussed with Bangladesh before trade restrictions are weakened. The U.S. delegation will undertake such discussions, and if results are satisfactory, support these proposals. They appear to be biologically justified.

Comments in support of the proposed addition of the Asian bullfrog, *Rana tigrina*, to Appendix II were made by TRAFFIC (U.S.A.), who felt that the listing seemed justified in light of tremendous trade levels and the potential threat to the species, especially in Bangladesh. The American Association of Ichthyologists and Herpetologists, on the other hand, indicated that the frog is quite widespread and while the situation needs to be monitored, the proposal is not justified at this time. The Service has determined that the species does not appear to be potentially threatened with extinction as a result of trade, but agrees that this situation should be monitored. The U.S. delegation will discuss such measures with representatives of the countries to export and assess whether measures taken by those countries to regulate harvest and trade are adequate to conserve the species.

4. *Corals*—The Wildlife Conservation and Mangement Committee of the AAZPA and the New York Zoological Society commented that the listing of at least some species of stony corals (Order Scleractinia) seems warranted because some corals are being exploited worldwide and some protection and monitoring may be useful. TRAFFIC (U.S.A.) added that trade demands potentially threaten many reef areas in the Pacific and Caribbean, and urged the United States to explore methods for better controlling coral trade and to encourage countries of origin to monitor exports, perhaps by including heavily-traded coral taxa on CITES Appendix III. The Service agrees with the latter recommendation; biological data do not support Appendix II listing of stony corals, but destruction of coral reefs through trade and other activities is a problem in many areas.

5. *Plants*—Australia has proposed to remove various endemic plants from Appendix II. Dr. F.T. Campbell of the Natural Resources Defense Council commented that questions about the long-term impact of extensive flower cutting and the status of particular species in some of the genera should be discussed with Australian authorities at the meeting. TRAFFIC (U.S.A.) commented in opposition to the Australian proposals for similar reasons. Dr. B.D. Morley of the Botanic Gardens of Adelaide and State Herbarium (Adelaide, Australia) expressed support for the proposed delistings, which he indicated is considered possible because of recent changes made in the legislation protecting plants in Western Australia. Dr. S.D. Hopper of the Western Australian Wildlife Research Centre sent reports providing details on the wildflower industry, and noted that he would have further reports available at the Argentina meeting on (1) the occurrence of Appendix II taxa on national parks and nature reserves, and (2) an examination of harvesting techniques used by commercial pickers. The service has concluded that the U.S. delegation should support the delisting of *Pimelea physodes*, but support other Australian plant proposals only if the concerns noted above and concerns on

adequate enforcement of Australian law can be resolved at the meeting.

Brazil has proposed the transfer of eight species of endemic orchids from Appendix II to Appendix I on the grounds that they are depleted or extirpated by horticultural collecting, illegal trade, and deforestation. Dr. F.T. Campbell of the Natural Resources Defense Council commented in support of this proposal. TRAFFIC (U.S.A.) also expressed support for the the proposal and supplied data on U.S. imports of the orchids in 1983. The Service has determined that the proposal is appropriate and that it should be supported by the U.S. delegation.

Chile has proposed the transfer of its Andean population of *Fitzroya cupressoides* (Alerce of false larch) from Appendix I to Appendix II. The coastal population of this tree in Chile was transferred to Appendix II in 1983. Comments in opposition to the current proposal were submitted by Dr. T.T. Veblen of the University of Colorado, Mr. G. Stutzin of the Comite Nacional pro Defensa de la Fauna y Flora in Chile, Dr. F.T. Campbell of the Natural Resources Defense Council, and TRAFFIC (U.S.A.). The basic concerns about this proposal are that it will aid in the reduction of existing stands of *Fitzroya*, and that there is little or no chance that the populations will be managed as a renewable resource. The Service shares these concerns, which led to the listing of *Fitzroya cupressoides* in Appendix I of CITES in 1973 and as a threatened species under the U.S. Endangered Species Act in 1979.

The Peoples Republic of China has proposed the addition of three species of rare endemic plants to Appendix I. Dr. S.L. Krugman of the U.S. Forest Service commented that most if not all of the known stands of *Cathaya argyrophylla* are under protection in China, that there is considerable scientific interest in the species, but that it is not of commercial importance. Dr. W.L. Ackerman, formerly of the U.S. National Arboretum, commented that *Camellia chrysantha* may well be an endangered species in the wild, perhaps because of the great demand for it abroad. Since 1980, it has been under rapid propagation and distribution in several countries. Although the species is maintained in cultivation, Dr. Ackerman noted that its extirpation in the wild would be a great loss for the genetic variation that may exist there. Dr. F.T. Campbell of the Natural Resources Defense Council commented in support of the proposal to add *Cycas panzhihuaensis* to Appendix I. The Service has determined that the U.S. delegation should support all three proposals, pending clarification from the Chinese delegation about the need for international protection in addition to the current national protection.

Summary of Positions

Negotiating positions of the U.S. delegation on proposals by Parties other than the United States are summarized in the following table.

Species	Proposed amendment	Proponent	U.S. position
Mammals:			
Order Primates:			
Alouatta palliata (mantled) howler monkey	Remove from I	Costa Rica	Oppose.
Pygathrix (Rhinopithecus) spp. (snubnosed monkeys)	Transfer from II to I	China	Support.
Loris tradigradus (slender loris)	do	India	Do.
Presbytis entellus (gray or Hanuman langur)	Transfer from I to II	do	Do.
Presbytis phayrei (dusky langur)	Transfer from II to I	do	Do.
Order Cetacea: *Monodon monoceros* (narwhal)	do	Federal Republic of Germany	Do.
Order Carnivora:			
Felis bengalensis bengalensis (leopard cat)	Transfer Chinese population from I to II	China	Do.
Selenarctos thibetanus (Asiatic black bear)	Transfer from I to II	do	Oppose.
Cystophora cristata (hooded seal)	Add to II	Sweden	Support.
Vulpes (*Fennecus*) *zerda* (fennec fox)	Added to II	Tunisia	Oppose.
Order Perissodactyla: *Equus kiang* (Kiang, wild ass)	Transfer from II to I	India	Support.
Order Artiodactyla:			
Camelus bactrianus (Bactrian camel)	Add to I	China	Do.
Cervus albirostris (white lipped deer)	do	do	Do.
Muntiacus crinifrons (black muntjac)	do	do	Do.
Budorcas taxicolor (takin)	do	do	Do.
Birds:			
Order Ciconiiformes: *Jabiru mycteria* (Jabiru)	do	Costa Rica	Oppose.
Order Falconiformes:			
Falco jugger (lagger falcon)	Transfer from II to I	India	Do.
Falco rusticolus (gyrfalcon)	Transfer North American population from II to I	Denmark and Norway	Do.
Order Gruiformes: *Gruidae* spp. (cranes)	Add all species not yet listed to II	United Kingdom	Support.
Order Psittaciformes:			
Ara ambigua (great green macaw)	Transfer from II to I	Costa Rica	Do.
Ara macao (scarlet macaw)	Transfer from II to I	do	Oppose.
Reptiles:			
Order Crocodylia:			
Crocodylus niloticus (Nile crocodile)	Transfer from I to II	Malawi	Do.
Crocodylus niloticus (Nile crocodile)	Transfer Mozambique population from I to II	Mozambique	Do.
Crocodylus porosus (salt-water crocodile)	Transfer Australian population subject to ranching from I to II.	Australia	Support.
Crocodylus porosus (salt-water crocodile)	Transfer Indonesian population subject to ranching from I to II.	Indonesia	Oppose.
Order Testudinata:			
Chelonia mydas (green sea turtle)	Transfer Indonesian population from I to II	do	Do.
Chelonia mydas (green sea turtle)	Transfer Suriname population subject to ranching from I to II.	Suriname	Do.
Chelonia mydas (green sea turtle)	Transfer Europa and Tromelin Islands populations subject to ranching from I to II.	France	Support
Chelonia mydas (green sea turtle)	Transfer captive population subject to ranching in Cayman Island from I to II.	United Kingodom	Do.
Eretmochelys imbricata (hawksbill sea turtle)	Transfer Indonesia population from I to II	Indonesia	Oppose.
Eretmochelys imbricata (hawksbill sea turtle)	Transfer Seychelles population from I to II	Seychelles	Do.
Kachuga tecta tecta (Indian sawback turtle)	Transfer from I to II	Bangladesh and India	Support.
Lissemys punctata punctata (Indian flap-shell tortoise)	do	Bangladesh	Do.
Trionyx gangeticus (Indian softeshell turtle)	do	India	Do.
Trionyx hurum (peacock softshell turtle)	do	do	Do.
Order Squamata:			
Haplocephalus bundaroides (*Broad-headed snake*)	Add to II	Australia	Do.
Varanus bengalensis (Bengal monitor)	Transfer from I to II	Bangladesh	Oppose.
Varanus flavescens (yellow monitor)	do	do	Do.

Species	Proposed amendment	Proponent	U.S. position
Amphibians:			
Order Anura:			
Bufo periglenes (Monteverde toad)	Transfer from I to III	Costa Rica	Support.
Rana hexadactyla (Asian bullfrog)	Add to II	Federal Republic of Germany	Oppose.
Rana tigrina (Indian bullfrog)	do	do	Do.
Rheobatrachus spp. (platypus frog)	do	Australia	Support.
Molluscs:			
Order Veneroida:			
Hippopus hippopus (horse's hoof clam)	do	do	Do.
Hippopus porcellanus (china clam)	do	do	Do.
Tridacna crocea (crocus clam)	do	do	Do.
Tridacna maxima (small giant clam)	do	do	Do.
Tridacna squamosa (scaly clam)	do	do	Do.
Corals:			
Acropora spp. (staghorn corals)	do	do	Oppose.
Euphyllia spp. (trumpet corals)	do	do	Do.
Favia spp. (brain corals)	do	do	Do.
Fungia spp. (mushroom corals)	do	do	Do.
Halomitra spp. (bowl corals)	do	do	Do.
Heliopora spp. (blue corals)	do	do	Do.
Lobophyllia spp. (brain corals)	do	do	Do.
Merulina spp. (merulinas)	do	do	Do.
Millepora spp. (fire corals)	do	do	Do.
Pavona spp. (cactus corals)	do	do	Do.
Pectinia spp. (lettuce corals)	do	do	Do.
Platygyra spp. (brain corals)	do	do	Do.
Pocillopora spp. (brush corals)	do	do	Do.
Seriatopora spp. (bird nest corals)	do	do	Do.
Stylophora spp. (cauliflower corals)	do	do	Do.
Tubipora spp. (organ-pipe coral)	do	do	Do.
Platygyra spp. (brain corals)	do	do	Do.
Pocillopora spp. (brush corals)	do	do	Do.
Seriatopora spp. (bird nest corals)	do	do	Do.
Stylophora spp. (cauliflower corals)	do	do	Do.
Tubipora spp. (organ-pipe coral)	do	do	Do.
Plants:			
Family Caryophyllaceae:			
Gymnocarpos przewalskii	Delete from I	Switzerland	Do.
Melandrium mongolicus	do	do	Do.
Silene mongolica	do	do	Do.
Stellaria pulvinata	do	do	Do.
Family Compositae: *Saussurea lappa* (costus, kuth roots)	Transfer from II to I	India	Support.
Family Cupressaceae: *Fitzroya cupressoides* (fitzroya, alerce)	Transfer population of Andes in Chile from I to II	Chile	Oppose.
Family Cycadaceae: *Cycas panzhihuaensis*	Transfer from II to I	China	Support.
Family Haemodoraceae:			
Anigozanthos spp. (kangaroo paws)	Delete from II	Australia	Oppose.
Macropidia fuliginosa (black kangaroo paw)	do	do	Do.
Family Leguminosae:			
Ammopiptanthus mongolicum	Delete from I	Switzerland	Do.
Thermopsis mongolica	Delete from II	do	Do.
Family Orchidaceae:			
Cattleya aclandiae	Transfer from II to I	Brazil	Support.
Cattleya amethystoglossa	do	do	Do.
Cattleya dormaniana	do	do	Do.
Cattleya granulosa	do	do	Do.
Cattleya schilleriana	do	do	Do.
Cattleya schofieldiana	do	do	Do.
Cattleya velutina	do	do	Do.
Laelia tenebrosa	do	do	Do.
Family Pinaceae:			
Cathaya argyrophylla	Add to I	China	Do.
Family Proteaceae:			
Banksia spp. (banksias)	Delete from II	Australia	Oppose.
Conospermum spp. (smoke brushes)	do	do	Do.
Dryandra formosa (showy dryandra)	do	do	Do.
Dryandra polycephala	do	do	Do.
Xylomelum spp. (woody pears)	do	do	Do.
Family Rutaceae:			
Crowea spp. (croweas)	do	do	Do.
Geleznowia verrucosa	do	do	Do.
Family Theaceae:			
Camellia chrysantha	Add to I	China	Support.
Family Thymelaeaceae:			
Pimelea physodes (qualup bell)	Delete from II	Australia	Do.
Family Verbenaceae:			
Caryopteris mongolica	Delete from II	Switzerland	Oppose.

Negotiating positions given in this table are based upon the best available biological and trade information, taking into account comments received from the public and the criteria for listing species in the appendices (Resolutions Conf. 1.1 and 1.2 of the Conference of the Parties to CITES). If further information is presented at the meeting in Argentina, the U.S. delegation will take it into account in determining whether these positions remain appropriate. As indicated above in the discussion of comments, support or opposition to particular proposals may depend on whether questions about them are satisfactorily answered at the meeting.

List of Subjects in 50 CFR Part 23

Endangered and threatened plants, Endangered and threatened wildlife, Exports, Fish, Imports, Marine mammals, Plants (agriculture), Treaties.

This notice issued under authority of the Endangered Species Act of 1973 (16 U.S.C. 1531 et seq.; 87 Stat. 884, as amended). It was prepared by Dr. Richard L. Jachowski, Office of Scientific Authority.

Dated: April 9, 1985.

Robert A. Jantzen,

Director, U.S. Fish and Wildlife Service.

[FR Doc. 85-8866 Filed 4-11-85; 8:45 am]

BILLING CODE 4310-55-M

Notices

Federal Register
Vol. 50, No. 71
Friday, April 12, 1985

This section of the FEDERAL REGISTER contains documents other than rules or proposed rules that are applicable to the public. Notices of hearings and investigations, committee meetings, agency decisions and rulings, delegations of authority, filing of petitions and applications and agency statements of organization and functions are examples of documents appearing in this section.

DEPARTMENT OF COMMERCE

Bureau of the Census

Estimates of the Voting Age Population for 1984

In accordance with the requirements of the 1976 amendment to the Federal Election Campaign Act, 2 U.S.C. 441a(e), notice is hereby given that the estimates of the voting age population for July 1, 1984, for each state, the District of Columbia, the Commonwealth of Puerto Rico, and the Territories of American Samoa, Guam and the Virgin Islands are as shown in the following table.

I have certified these estimates to the Federal Election Commission.

Malcolm Baldrige,
Secretary of Commerce.

ESTIMATES OF THE POPULATION OF VOTING AGE FOR STATES AND SELECTED OUTLYING AREAS: JULY 1, 1984

[In thousands]

Area	Population 18 and over
United States	173,469
Alabama	2,860
Alaska	338
Arizona	2,196
Arkansas	1,697
California	18,961
Colorado	2,322
Connecticut	2,407
Delaware	458
District of Columbia	488
Florida	8,465
Georgia	4,205
Hawaii	752
Idaho	679
Illinois	8,421
Indiana	3,987
Iowa	2,126
Kansas	1,786
Kentucky	2,692
Louisiana	3,107
Maine	850
Maryland	3,264
Massachusetts	4,433
Michigan	6,589
Minnesota	3,038
Mississippi	1,801
Missouri	3,694
Montana	588
Nebraska	1,163
Nevada	677
New Hampshire	725
New Jersey	5,661

ESTIMATES OF THE POPULATION OF VOTING AGE FOR STATES AND SELECTED OUTLYING AREAS: JULY 1, 1984—Continued

[In thousands]

Area	Population 18 and over
New Mexico	988
New York	13,346
North Carolina	4,564
North Dakota	488
Ohio	7,873
Oklahoma	2,377
Oregon	1,965
Pennsylvania	8,991
Rhode Island	736
South Carolina	2,373
South Dakota	500
Tennessee	3,471
Texas	11,272
Utah	1,027
Vermont	390
Virginia	4,208
Washington	3,190
West Virginia	1,421
Wisconsin	3,488
Wyoming	351
Outlying Areas	
Puerto Rico	2,038
Guam	70
Virgin Islands	60
American Samoa	18

[FR Doc. 85-8880 Filed 4-11-85; 8:45 am]
BILLING CODE 3510-07-M

International Trade Administration

Montana State University; Decision on Application for Duty-Free Entry of Scientific Instrument

This decision is made pursuant to section 6(c) of the Educational, Scientific, and Cultural Materials Importation Act of 1966 (Pub. L. 89-651, 80 Stat. 897; 15 CFR Part 301). Related records can be viewed between 8:30 AM and 5:00 PM in Room 1523, U.S. Department of Commerce, 14th and Constitution Avenue, NW., Washington, D.C.

Docket Number: 82-00323R. Applicant: Montana State University, Bozeman, MT 59717. Instrument: Mass Spectrometer System, Model MM7070E-HF with Integrated DS2035 and Accessories. Original notice of this resubmitted application was published in the **Federal Register** of September 20, 1985.

Comments: None received.

Decision: Approved. No instrument of equivalent scientific value to the foreign instrument, for such purposes as it is intended to be used, is being manufactured in the United States.

Reasons: This application is a resubmission of Docket Number 82-323 which was denied without prejudice to resubmission for informational deficiencies. The foreign instrument provides (1) a maximum scan speed of 0.5 seconds per decade with 1000 resolution and a total cycle time of 1 second, and (2) 300 millisecond switching between positive and negative ion operation. The National Institutes of Health advises in its memorandum dated January 23, 1985 that (1) the capability of the foreign instrument described above is pertinent to the applicant's intended purpose and (2) it knows of no domestic instrument or apparatus of equivalent scientific value to the foreign instrument for the applicant's intended use.

We know of no other instrument or apparatus of equivalent scientific value to the foreign instrument which is being manufactured in the United States.

(Catalog of Federal Domestic Assistance Program No. 11.105, Importation of Duty-Free Educational and Scientific Materials)

Frank W. Creel,
Acting Director, Statutory Import Programs Staff.

[FR Doc. 85-8839 Filed 4-11-85; 8:45 am]
BILLING CODE 3510-DS-M

Petitions by Producing Firms for Determinations of Eligibility To Apply for Trade Adjustment Assistance; R.M. Marquis Footwear, Inc., et al.

Peitions have been accepted for filing from the following firms: (1) R.M. Marquis Footwear, Inc., 25 Winter Street, Gardiner, Maine 04345, producer of riding boots (accepted March 11, 1985); (2) Samson Altman, Inc., 144 Moody Street, Waltham, Massachusetts 02154, producer of women's blazers (accepted March 11, 1985); (3) Barron Knitting Mills, Inc., North Main Street, Northfield, Vermont 05663, producer of socks for me, women and children (acceptaed March 11, 1985); (4) Empreass Coqui, Inc., P.O. Box 89, Sabana Seca, Toa Baja, Puerto Rico 00749, producer of seasonings, condiments and processed food mixes (accepted March 13, 1985); (5) Fisher Berkeley Corporation, P.O. Box 8487, Emeryville, California 94662, producer of loudspeaker intercommunication systems (accepted March 14, 1985); (6) Gardner/Fulmer Lithograph, 8332 Commonwealth Avenue, Buena Park, California 90621, producer of books,

posters, programs, labels and brochures (accepted March 19, 1985); (7) Aloha Shake Company, Inc., P.O. Box 376, Pacific Beach, Washington 98571, producer of wood shakes and shingles (accepted March 19, 1985); (8) Warren Industries, Inc., 2045 Bennett Road, Philadephia, Pennsylvania 19116, producer of surveying, engineering and other instruments (accepted March 25, 1985); (9) Del Astra Industries, Inc., 1011 North Broadway, Stockton, California 95205, producer of waterbed mattresses and liners (accepted March 25, 1985); (10) Luke Farms, R. D. 2, Route 14A, Dundee, New York 14937, producer of grapes, berries and corn (accepted March 25, 1985); (11) Spokane Industries, Inc., P.O. Box 3350, Spokane, Washington 99220, producer of rock crushers, steel and iron castings, and steel processing tanks (accepted March 25, 1985); (12) Lasy, Inc., 935 Dillingham Boulevard, Room 208, Honolulu, Hawaii 96817, producer of women's and girls' dresses, pants, shorts, shirts and blouses (accepted March 26, 1985); (13) Black River Hardwood Company, Inc., Route 2, Box 101, Kingstree, South Carolina 29556, producer of hardwood furniture dimension (accepted March 27, 1985); (14) Bean Hill Industries, Inc., 69 Chestnut Street, Norwich, Connecticut 06360, producer of men's and women's slacks and women's skirts (accepted March 27, 1985); (15) Burrell Cutlery Company, Inc., Rockwell Avenue, Ellicottville, New York 14731-0308, producer of cutlery and knife sets (accepted March 27, 1985); (16) The Terrell Machine Company, 3000 South Boulevard, Charlotte, North Carolina 28209, producer of gear drives and textile machinery (accepted March 28, 1985); (17) Marquise Collection, Inc., 100-02 Rockaway Boulevard, Ozone Park, New York 11417, producer of women's shirts (accepted March 29, 1985); (18) Boston Bay Seafoods Company, Inc., 9-11 Boston Fish Pier, Boston, Massachusetts 02210, producer of seafood (accepted April 2, 1985); (19) S. Goldfeder, Inc., 125 Grove Street, Yalesville, Connecticut 06492-1557, producer of silver-plated hollow ware (accepted April 2, 1985); (20) Imua Builder Services, Ltd., 91-188 Kalaeloa Boulevard, Ewa Beach, Hawaii 96707, producer of cabinets and millwork (accepted April 2, 1985); (21) Suz-Ette Fashions, Inc., 500 Seventh Avenue, New York, New York 10018, producer of women's coats and jackets (accepted April 2, 1985); (22) Cuddle Coat, Inc., 500 7th Avenue, New York, New York 10018, producer of women's coasts and suits (accepted April 2, 1985); (23) Pyramid Magnetics, Inc., 21100 Street, Chatsworth, California 91311, producer of computer components (accepted April 3, 1985); (24) Lou Taylor, Inc., 711 West 16th Street, Hialeah, Florida 33010, producer of handbags (accepted April 4, 1985); (25) Roadmaster Corporation, P.O. Box 344, Olney, Illinois 62450, producer of bicycles, tricycles, other toy vehicles and exercise equipment (accepted April 4, 1985).

The petitions were submitted purusant to section 251 of the Trade Act of 1974 (Public Law 93-618). Consequently, the United States Department of Commerce has initiated separate investigations to determine whether increased imports into the United States of articles like or directly competitive with those produced by each firm contributed importantly to total or partial separation of the firm's workers, or threat thereof, and to a decrease in sales or production of each pettioning firm.

Any party having a substantial interest in the proceedings may request a public hearing on the matter. A request for a hearing must be received by the Director, Certification Division, Office of Trade Adjustment Assistance, International Trade Administration, U.S. Department of Commerce, Washington, D.C. 20230, no later than the close of business of the tenth calendar day following the publication of this notice.

The Catalog of Federal Domestic Assistance official program number and title of the program under which these petitions are submitted is 11.309, Trade Adjustment Assistance. Inasfar as this notice involves petitions for the determination of eligibility under the Trade Act of 1974, the requirements of Office of Management and Budget Circular No. A-95 regarding review by clearinghouses do not apply.

Jack W. Osbrun,

Director, Certification Division, Office of Trade Adjustment Assistance.

[FR Doc. 85-8840 Filed 4-11-85; 8:45 am]

BILLING CODE 3510-DR-M

[A-429-403]

Postponement of Final Antidumping Duty Determination and Postponement of Hearing; Carbon Steel Wire Rod From the German Democratic Republic

AGENCY: International Trade Administration, Import Administration, Commerce.

ACTION: Notice.

SUMMARY: This notice informs the public that (1) we have a received a request from the respondent in this investigation to postpone the final determination until not later than July 1, 1985, as permitted in section 735(a)(2)(A) of the Tariff Act of 1930, as amended (the Act) (19 U.S.C. 1673d(a)(2)(A)), and (2) that we have determined to postpone our hearing until May 20, 1985, and our final determination as to whether sales of carbon steel wire rod (wire rod) from the German Democratic Republic (GDR) have occured at less than fair value until not later than July 1, 1985.

EFFECTIVE DATE: April 12, 1985.

FOR FURTHER INFORMATION CONTACT: Raymond Busen, Office of Investigations, Import Administration, International Trade Administration, Department of Commerce, 14th Street and Constitution Avenue, N.W., Washington, D.C. 20230; telephone: (202) 377-2830.

SUPPLEMENTARY INFORMATION: On October 24, 1984, we published a notice in the **Federal Register** (49 FR 42773) that we were initiating, under section 732(b) of the Act (19 U.S.C. 1673a(b)), an antidumping duty investigation to determine whether wire rod from the GDR was being, or was likely to be, sold at less than fair value. On November 13, 1984, the International Trade Commission determined that there is a reasonable indication that imports of wire rod are materially injuring a U.S. industry. On March 12, 1985, we published a preliminary determination of sales at less than fair value with respect to this merchandise (50 FR 9815). The notice stated that if the investigation proceeded normally, we would make our final determination by May 20, 1985. Pursuant to section 735(a)(2) of the Act, the respondent requested an extension of the final determination date. The respondent is qualified to make such a request because it accounts for a significant proportion of the exports of the merchandise. If an exporter who accounts for a significant proportion of exports of the merchandise under investigation properly requests an extension after an affirmative preliminary determination, we are required, absent compelling reasons to the contrary, to grant the request. We will issue a final determination in this case not later than July 1, 1985.

The hearing, originally scheduled for April 10, 1985, has been postponed, the new hearing date will be May 20, 1985, as 10 a.m. in room 1851, Department of Commerce, 14th Street and Constitution Avenue, N.W., Washington, D.C. 20230.

Interested parties who wish to participate must submit a request to the Deputy Assitant Secretary for Import Administration, Room 3099B, at the

above address within 10 days of publication of this notice. Oral presentations will be limited to issues raised in the briefs.

Requests should contain: (1) The party's name, address, and telephone number, (2) the number of participants, (3) the reason for attending, and (4) a list of the issues to be discussed. In addition, prehearing briefs in at least 10 copies must be submitted to the Deputy Assistant Secretary by May 13, 1985. All written views should be filed in accordance with 19 CFR 353.46, at the above address and in at least 10 copies, not later than the date established at the hearing for the submission of post-hearing briefs. All written views should be submitted not later than May 24, 1985.

This notice is published pursuant to section 735(d) of the Act.

Alan F. Holmer,

Deputy Assistant Secretary for Import Administration.

April 4, 1985.

[FR Doc. 85-8841- Filed 4-11-85; 8:45 am]

BILLING CODE 3510-DS-M

National Oceanic and Atmospheric Administration

National Advisory Committee on Oceans and Atmosphere; Meeting Addendum

An addition has been made to the agenda for the April 17-18, 1985 National Advisory Committee on Oceans and Atmosphere (NACOA) meeting published Monday, April 1, 1985 (50FR 12844-12845). The revised tentative agenda is as follows and includes an additional panel meeting Wednesday morning.

Wednesday, April 17, 1985

2001 Wisconsin Avenue, NW., Page Building #1, Rooms 416 and B-100, Washington, DC

9:00 a.m.-10:30 a.m.: Plenary—Room 416
- Introductory Remarks
- Guest Speaker, Congressman Mike Lowry

10:30 a.m.-12:30 p.m.: Panel Meetings
- Federal/State Relationships, Chairman: John Norton Moore, Room 416
  Topic: Work Session on CZMA, Reauthorization/Consistency
  Speakers: None

10:30 a.m.-12:30 p.m.
- Shipbuilding, Chairman: Don Walsh, Room B-100
  Topic: Work Session
  Speakers: None

12:30 p.m.-1:30 p.m.: Lunch

1:30 p.m.-4:00 p.m.: Panel Meetings
- Exclusive Economic Zone, Chairman: Lee Gerhard, Room 416
  Topic: Elements of a National Plan
  Speakers: Harris B. Stewart, Jr., Professor of Marine Studies, Director, Center of Marine Studies, Old Dominion University
  George Zahn, President, Deep Sea Ventures, Inc.
  Juan Carlos Torres, President, Sea Pharm
- Atmospheric Affairs, Chairman: S. Fred Singer, Room B-100
  Topic: Acid Rain
  Speakers: George Freeman, Counsel, Utility Air Regulatory Group
  TBA: Representative from an Environmental Interest Group

4:00 p.m.-5:00 p.m.: Plenary—Room 416
- Federal/State Relationships
  Topic: CZMA Reauthorization/Consistency

5:00 p.m.: Recess

Thursday, April 18, 1985

2001 Wisconsin Avenue, NW., Page Building #1, Room 416, Washington, DC

8:30 a.m.-10:00 a.m.: Plenary—Room 416
- Shipbuilding, presentation by Panel Chairman

10:30 a.m.-12:30 p.m.: Plenary
- Closed Session, Presentation by the Department of Defense on data protection

Intelligence Community Headquarters, 1724 F Street, NW., Room 6W02, Washington, DC

12:30 p.m-1:30 p.m.: Lunch

2001 Wisconsin Avenue, NW., Page Building #1, Room 416, Washington, DC

2:00 p.m.-4:00 p.m.: Plenary—Room 416
- Panel Reports
- Other Business

4:00 p.m.: Adjourn

Additional information concerning this meeting may be obtained through the Committee's Executive Director, Steven N. Anastasion, whose mailing address is: National Advisory Committee on Oceans and Atmosphere, 330 Whitehaven Street, NW., Washington, DC. 20235. The telephone number is 202/653-7818.

Dated: April 9, 1985.

Steven N. Anastasion,

Executive Director.

[FR Doc. 85-8838 Filed 4-11-85; 8:45 am]

BILLING CODE 3510-12-M

Marine Mammals; Application for Permit; Montreal Zoological Park

Notice is hereby given that an Applicant has applied in due form for a Permit to take marine mammals as authorized by the Marine Mammal Protection Act of 1972 (16 U.S.C. 1361-1407), and the Regulations Governing the Taking and Importing of Marine Mammals (50 CFR Part 216).

1. Applicant:

a. Name: Montreal Zoological Park (P140C).

b. Address: Montreal, Quebec, Canada 83C T80.

2. Type of Permit: Public Display.

3. Name and Number of Marine Mammals: California sea lion (*Zalophus californianus*)—2.

4. Type of Take: Captive maintenance of beached/stranded animals.

5. Location of Activity: California.

6. Period of Activity: 1 year.

As a request for a permit to take living marine mammals to be maintained in areas outside the jurisdiction of the United States, this application has been submitted in accordance with National Marine Fisheries Service policy concerning such applications (40 FR 11619, March 12, 1975). In this regard, no application will be considered unless:

(a) It is submitted to the Assistant Administrator for Fisheries, National Marine Fisheries Service, through the appropriate agency of the foreign government;

(b) It includes:

i. A certification from such appropriate government agency verifying the information set forth in the application;

ii. A certification from such government agency that the laws and regulations of the government involved permit enforcement of the terms of the conditions of the permit, and that the government will enforce such terms;

iii. A statement that the government concerned will afford comity to a National Marine Fisheries Service decision to amend, suspend or revoke a permit.

In accordance with the above cited policy, the certification and statements of the Ministere du Loisir, de la Chasse et de la Peche have been found appropriate and sufficient to allow consideration of this permit application.

The arrangements and facilities for transporting and maintaining the marine mammals requested in the above described application have been inspected by a licensed veterinarian, who has certified that such arrangements and facilities are adequate to provide for the well-being of the marine mammals involved.

Concurrent with the publication of this notice in the **Federal Register**, the Secretary of Commerce is forwarding copies of this application to the Marine

Mammal Commission and the Committee of Scientific Advisors.

Written data or views, or requests for a public hearing on this application should be submitted to the Assistant Administrator for Fisheries, National Marine Fisheries Service, U.S. Department of Commerce, Washington, D.C. 20235, within 30 days of the publication of this notice. Those individuals requesting a hearing should set forth the specific reasons why a hearing on this particular application would be appropriate. The holding of such hearing is at the discretion of the Assistant Administrator for Fisheries.

All statements and opinions contained in this application are summaries of those of the Applicant and do not necessarily reflect the views of the National Marine Fisheries Service.

Documents submitted in connection with the above application are available for review in the following offices:

Assistant Administrator for Fisheries, National Marine Fisheries Service, 3300 Whitehaven Street, NW., Washington, D.C., and

Regional Director, National Marine Fisheries Service, Southwest Region, 300 South Ferry Street, Terminal Island, California 90731.

April 4, 1985.

William G. Gordon,

Assistant Administrator for Fisheries, National Marine Fisheries Service.

[FR Doc. 85-8859 Filed 4-11-85; 8:45 am]

BILLING CODE 3510-08-M

COMMITTEE FOR THE IMPLEMENTATION OF TEXTILE AGREEMENTS

Request for Public Comment on Bilateral Textile Consultations With the Government of the Republic of Indonesia To Review Trade Category 614pt

April 9, 1985.

On March 29, 1985, the Government of the United States requested consultations with the Government of the Republic of Indonesia with respect to spun filament polyester printcloth in Category 614pt. (only TSUSA No. 338.5051). This request was made on the basis of the agreement, as amended, between the Governments of the United States and the Republic of Indonesia relating to trade in Cotton, Wool and Man-Made Fiber Textiles and Textile Products of October 13 and November 9, 1982.

The purpose of this notice is to advise that, if no solution is agreed upon in consultations between the two governments, CITA, pursuant to the agreement, as amended, may establish a prorated twelve-month specific limit of 2,953,278 square yards for the entry and withdrawal from warehouse for consumption of textile products in Category 614pt, produced or manufactured in Indonesia and exported to the United States during the period which began on March 29, 1985 and extends through the end of the agreement year, June 30, 1985.

The Government of the United States has decided, pending agreement on a mutually satisfactory solution, to control imports in this category during the 90-day consultation period (March 29–June 27, 1985) at a level of 3,418,146 square yards. In the event the limit established for the ninety-day period is exceeded, such excess amount, if allowed to enter, may be charged to levels established for the period which began on March 29, 1985 and extends through June 30, 1985 and any restraint period established subsequent to that.

A summary market statement for this category follows this notice.

A description of the textile categories in terms of T.S.U.S.A. numbers was published in the **Federal Register** on December 13, 1982 (47 FR 55709), as amended on April 7, 1983 (48 FR 15175), May 3, 1983 (48 FR 19924), December 14, 1983 (48 FR 55607), December 30, 1983 (48 FR 57584), April 4, 1984 (49 FR 13397), June 28, 1984 (49 FR 26622), July 16, 1984 (49 FR 28754), November 9, 1984 (49 FR 44782), and in Statistical Headnote 5, Schedule 3 of the Tarif Schedules of the United States Annotated (1985).

Anyone wishing to comment or provide data or information regarding the treatment of Category 614pt under the Bilateral Cotton, Wool and Man-Made Fiber Textile Agreement with the Government of the Republic of Indonesia, or on any other aspect thereof, or to comment on domestic production or availability of textile products included in the category, is invited to submit such comments or information in ten copies to Mr. Walter C. Lenahan, Chairman, Committee for the Implementation of Textile Agreements, International Trade Administration, U.S. Department of Commerce, Washington, D.C. 20230. Because the exact timing of the consultations is not yet certain, comments should be submitted promptly. Comments or information submitted in response to this notice will be available for public inspection in the Office of Textiles and Apparel, Room 3100, U.S. Department of Commerce, 14th and Constitution Avenue, N.W., Washington, D.C., and may be obtained upon written request.

Further comments may be invited regarding particular comments or information received from the public which the Committee for the Implementation of Textile Agreements considers appropriate for further consideration.

The solicitation of comments regarding any aspect of the agreement or the implementation thereof is not a waiver in any respect of the exemption contained in 5 U.S.C 553(a)(1) relating to matters which constitute "a foreign affairs function of the United States."

Walter C. Lenahan,

Chairman, Committee for the Implementation of Textile Agreements.

Indonesia—Market Statement

Category 614 Part—Spun/Filament, Polyester/Cotton Printcloth, TSUSA No. 338.5024

March 1985.

Summary and Conclusions

United States imports of Category 614 Part—spun/filament polyester/cotton printcloth—from Indonesia quadrupled in 1984 to 9.8 million square yards. This is a sharp and substantial increase in imports into a sector already adversely affected by imports.

Indonesia is the largest supplier of this type printcloth, accounting for 36 percent of the total imports in 1984. These imports from Indonesia are entered at duty-paid landed values which are below the U.S. producers' price for comparable fabrics. These and other factors lead the United States Government to conclude that imports from Indonesia are creating a real risk of market disruption in the United States for such fabrics.

U.S. Producers' Market Share

The U.S. producers' share of Category 614Pt. fabric market declined from 87 percent in 1982 to 72 percent in 1984. During this period, the U.S. share has dropped on an average of 8 percent per year.

U.S. Production

Although U.S. production of Category 614Pt. fabric increased in 1984, this does not reflect current market conditions for the U.S. producer. The increase in production is not flowing through to final sales but to inventory accumulation. Mill owned inventories rose 109 percent from January 1984 to January 1985. Billed and held inventories are up 19 percent. Unfilled orders dropped dramatically with forward bookings for the second quarter of 1985 being off by 46 percent. In addition, current production operations are severely threatened to the point where one major mill recently completely withdrew from the market shutting down 200 looms affecting 150 employees. Another company is seriously considering a reduction in operating schedules and a lay-off of over 100 employees in two mills which directly compete with these imports.

U.S. Imports

U.S. imports of Category 614Pt. increased to a record level of 27.5 million square yards in 1984. Imports for 1984 were 16.9 million square yards higher, or 160 percent of the 1983 levels. The 1984 imports were five and three-quarters times the 1982 imports.

Import Penetration

The ratio of imports to domestic production has increased almost three-fold, rising from 14.8 percent in 1981 to 39.3 percent in 1984.

Import Values

All of the 1984 imports of Category 614 from Indonesia are entered under TSUSA No. 338.5024, combination of spun and filament yarn polyester/cotton printcloth. The duty-paid values of these imports from Indonesia are below the U.S. producer price for comparable fabrics.

April 9, 1985.

Committee for the Implementation of Textile Agreements

Commissioner of Customs,
Department of the Treasury,
Washington, D.C.

Dear Mr. Commissioner: Under the terms of section 204 of the Agricultural Act of 1956, as amended (7 U.S.C. 1854), and the Arrangement Regarding International Trade in Textiles done at Geneva on December 20, 1973, as extended on December 15, 1977 and December 22, 1981; pursuant to the Bilateral Cotton, Wool and Man-Made Fiber Textile Agreement of October 13 and November 9, 1982, as amended and extended, between the Governments of the United States and Republic of Indonesia; and in accordance with the provisions of Executive Order 11651 of March 3, 1972, as amended, you are directed to prohibit, effective on April 15, 1985, entry into the United States for consumption and withdrawal from warehouse for consumption of man-made fiber textile products in Category 614pt.[1] produced or manufactured in Indonesia and exported during the ninety-day period which began on March 29, 1985 and extends through June 27, 1985 in excess of 3,418,146 square yards.[2]

Textile products in Category 614pt.[1] which have been exported to the United States prior to March 29, 1985 shall not be subject to this directive.

Textile products in Category 614pt.[1] which have been released from the custody of the U.S. Customs Service under the provisions of 19 U.S.C. 1448(b) or 1484(a)(1)(A) prior to the effective date of this directive shall not be denied entry under this directive.

A description of the textile categories in terms of T.S.U.S.A. numbers was published in the Federal Register on December 13, 1982 (47 FR 55709), as amended on April 7, 1983 (48 FR 15175), May 3, 1983 (48 FR 19924), December 14, 1983 (48 FR 55607), December 30, 1983 (48 FR 57584), April 4, 1984 (49 FR 13397), June 28, 1984 (49 FR 26622), July 16, 1984 (49 FR 28754), November 9, 1984 (49 FR 44782), and in Statistical Headnote 5, Schedule 3 of the Tariff Schedules of the United States Annotated (1985).

[1] In Category 614, only TSUSA No. 388.5051.
[2] The level has not been adjusted to reflect any imports exported after March 28, 1985.

In carrying out the above directions, the Commissioner of Customs should construe entry into the United States for consumption to include entry for consumption into the Commonwealth of Puerto Rico.

The Committee for the Implemetation of Textile Agreements has determined that this action falls within the foreign affairs exception to the rulemaking provisions of 5 U.S.C. 553.

Sincerely,

Walter C. Lenahan,
Chairman, Committee for the Implementation of Textile Agreements.

[FR Doc. 85-8679 Filed 4-11-85; 8:45 am]

BILLING CODE 3510-DR-M

COMMITTEE FOR PURCHASE FROM THE BLIND AND OTHER SEVERELY HANDICAPPED

Procurement List 1985; Additions

AGENCY: Committee for Purchase from the Blind and Other Severely Handicapped.

ACTION: Additions to Procurement List.

SUMMARY: This action adds to Procurement List 1985 commodities and a service to be provided by workshops for the blind and other severely handicapped.

EFFECTIVE DATE: April 12, 1985.

ADDRESS: Committee for Purchase from the Blind and Other Severely Handicapped, Crystal Square 5, Suite 1107, 1755 Jefferson Davis Highway, Arlington, Virginia 22202.

FOR FURTHER INFORMATION CONTACT: C.W. Fletcher, (703) 557-1145.

SUPPLEMENTARY INFORMATION: On September 28, November 9, and December 7, 1984 and February 1, 1985, the Committee for Purchase from the Blind and Other Severely Handicapped published notices (49 FR 38325, 49 FR 44788, 49 FR 47890, and 50 FR 4726) of proposed additions to Procurement List 1985, October 19, 1984 (49 FR 41195).

Additions

After consideration of the relevant matter presented, the Committee has determined that the commodities and service listed below are suitable for procurement by the Federal Government under 41 U.S.C. 46-48c, 85 Stat. 77 and 41 CFR 51-2.6.

I certify that the following actions will not have a significant impact on a substantial number of small entities. The major factors considered were:

a. The actions will not result in any additional reporting, recordkeeping or other compliance requirements.

b. The actions will not have a serious economic impact on any contractors for the commodities and service listed.

c. The actions will result in authorizing small entities to produce the commodities and provide the service procured by the Government.

Accordingly, the following commodities and service are hereby added to Procurement List 1985:

Class 1015

Staff Section: 1015-00-699-0633

Class 1025

Staff Section: 1025-01-044-2587, 1025-00-563-7232

Class 6530

Paper Sheeting, Examination Table: 6530-01-092-3914

Class 7105

Frame, Picture (Wood): 7105-00-052-8698, 7105-00-051-1212, 7105-00-052-8686

SIC 7369

Commissary Shelf Stocking and Custodial Service, Columbus Air Force Base, Mississippi

C.W. Fletcher,
Executive Director.

[FR Doc. 85-8842 Filed 4-11-85; 8:45 am]

BILLING CODE 6820-33-M

Procurement List 1985; Proposed Additions

AGENCY: Committee for Purchase from the Blind and Other Severely Handicapped.

ACTION: Proposed Additions to Procurement List.

SUMMARY: The Committee has received proposals to add to Procurement List 1985 commodities to be produced by and services to be provided by workshops for the blind and other severely handicapped.

Comments must be received on or before: May 15, 1985.

ADDRESS: Committee for Purchase from the Blind and Other Severely Handicapped, Crystal Square 5, Suite 1107, 1755 Jefferson Davis Highway, Arlington, Virginia 22202.

FOR FURTHER INFORMATION CONTACT: C.W. Fletcher, (703) 557-1145.

SUPPLEMENTARY INFORMATION: This notice is published to 41 U.S.C. 47(a)(2), 85 Stat. 77 and 41 CFR 51-2.6. Its purpose is to provide interested persons an opportunity to submit comments on the possible impact of the proposed actions.

Additions

If the Committee approves the proposed additions, all entities of the Federal Government will be required to procure the commodities and services

listed below from workshops for the blind or other severely handicapped.

It is proposed to add the following commodities and services to Procurement List 1985, October 19, 1984 (49 FR 41195):

Class 3750

Cutter, Weed: 3750-00-239-8677, 3750-00-239-8678

Class 3990

Pallet, Material Handling: 3990-00-892-4394

Class 6530

Pad, Pre-Operative Preparation: 6530-00-457-8193

Class 7105

Table, Coffee: 7105-00-139-7573, 7105-00-139-7601
Table, End: 7105-00-139-7598
Table, Lamp: 7105-00-139-7600

Class 8405

Liner, Poncho, Camouflage: 8405-00-889-3683

SIC 0782

Grounds Maintenance, Bonneville Lock and Dam, Bonneville, Oregon

SIC 7369

Commissary Shelf Stocking and Custodial Service, Fort Stewart, Georgia
Commissary Shelf Stocking and Custodial Service, Hunter Army Airfield, Georgia
Commissary Shelf Stocking and Custodial Service, Shaw Air Force Base, South Carolina

C.W. Fletcher,

Executive Director.

[FR Doc. 85-8843 Filed 4-11-85; 8:45 am]

BILLING CODE 6820-33-M

DEPARTMENT OF EDUCATION

National Advisory Council on Indian Education; Meeting

AGENCY: National Advisory Council on Indian Education.

ACTION: Notice of Closed Meeting.

SUMMARY: This notice sets forth the schedule and proposed agenda of a forthcoming closed meeting of the Executive Committee of the National Advisory Council on Indian Education. This notice also describes the functions of the Council. Notice of this meeting is required under section 10(a)(2) of the Federal Advisory Committee Act.

DATES: April 24, 1985, 9:00 A.M. until conclusion of business.

ADDRESS: Hilton Inn—Denver Airport, 4411 Peoria Street, Denver, CO 80239 (303/373-5730).

FOR FURTHER INFORMATION CONTACT: Lincoln C. White, Executive Director, National Advisory Council on Indian Education, 2000 L Street, N.W., Suite 500, Washington, D.C. 20036 (202/634-6160.

SUPPLEMENTARY INFORMATION: The National Advisory Council on Indian Education is established under section 442 of the Indian Education Act (20 U.S.C. 1221g). The Council is established to assist the Secretary in carrying out responsibilities under Section 441(a) of the Indian Education Act (Title IV of Pub. L. 92-318), through advising Congress, the Secretary of Education, the Under Secretary of Education and the Assistant Secretary of Elementary and Secondary Education with regard to education programs benefiting Indian children and adults.

The Executive Committee will meet in closed session to discuss personnel matters involving the selection of the Director, Indian Education Programs. This discussion will touch upon matters that would disclose information of a personal nature where disclosure would constitute a clearly unwarranted invasion of personal privacy if conducted in open session. Such matters are protected by exemption (6) of section 552b(c) of Title 5 U.S.C. of the Government in the Sunshine Act.

The public is being given less than fifteen days notice of this closed session due to the exceptional emergency nature of the situation and scheduling dates to correspond with the Executive Committee.

A summary of the activities of the closed session and related matters which are informative to the public consistent with the policy of Title 5 U.S.C. 552b will be available to the public within fourteen days of the meeting.

Dated: April 2, 1985. Signed at Washington, D.C.

Lincoln C. White,

Executive Director, National Advisory Council on Indian Education.

[FR Doc. 85-8837 Filed 4-11-85; 8:45 am]

BILLING CODE 4000-01-M

Intergovernmental Advisory Council on Education; Meeting

AGENCY: Intergovernmental Advisory Council on Education.

ACTION: Notice of Meeting.

SUMMARY: This notice sets forth the schedule and proposed agenda of a meeting of the Intergovernmental Advisory Council on Education. Notice of this meeting is required under section 10(a)(2) of the Federal Advisory Committee Act.

DATE: May 3, 1985.

ADDRESS: Holiday Inn—Capitol, 550 C Street SW, Washington, D.C. 20024. (Room will be posted.)

FOR FURTHER INFORMATION CONTACT: Laverne Johnson, Intergovernmental Advisory Council on Education, Department of Education, 300-7th Street SW., Washington, D.C. 20202 (202) 472-6464.

SUPPLEMENTARY INFORMATION: The Intergovernmental Advisory Council on Education was established under section 213 of the Department of Education Organization Act (20 U.S.C. 3423). The Council is established to provide assistance and make recommendations to the Secretary and the President concerning intergovernmental policies and relations pertaining to education.

The meeting of the Council is open to the public. The meeting is scheduled for 1:30 p.m. to 4:30 p.m. on May 3.

The proposed agenda includes:

—Evaluation of National Networking Conference
—Discussion of Council's Report on Conference
—Review of Possible Topics for the next Conference(s)
—Discussion on Council Internal Business

On May 2 and 3, the Council will host its first National Networking Conference. The topic for this conference is teacher preparation. Seating is limited. For further information on the conference, please contact Laverne Johnson at 202/472-6464.

Records are kept of all Council proceedings and are available for public inspection at the office of the Intergovernmental Advisory Council on Education, 300-7th Street SW., Room 513, Washington, D.C.

Signed at Washington, D.C. on Monday, April 8, 1985.

A. Wayne Roberts,

Deputy Under Secretary for Intergovernmental and Interagency Affairs.

[FR Doc. 85-8871 Filed 4-11-85; 8:45 am]

BILLING CODE 4000-01-M

DEPARTMENT OF ENERGY

Restricted Eligibility for Grant Award; Geothermal Resources Council

March 15, 1985.

AGENCY: Department of Energy, San Francisco Operations Office.

ACTION: Notice.

SUMMARY: DOE/SAN Announces that it intends to award a grant to the Geothermal Resources Council, Davis, CA, in the amount of $54,333, for "Technology Transfer at the GRC International Symposium". Pursuant to the DOE Financial Assistance Rules, 10 CFR 600.7(b), DOE/SAN has determined that eligibility for this grant award shall be limited to the Geothermal Resources Council.

PROCUREMENT REQUEST NUMBER: 03-85SF15607.000.

PROJECT SCOPE: The GRC proposes to develop and publish geothermal technology data which will feature the international aspects of geothermal development. They will also provide a display booth at their 1985 International Symposium, scheduled for August, 1985, designed to inform attendees of the numerous techniques, procedures, processes, materials and equipment that have been developed in the geothermal resources field but which remain relatively unknown to geothermal developers.

FOR FURTHER INFORMATION CONTACT: Ms. Lucy Garcia, FGS Div., U.S. Department of Energy, san Francisco Operations Office, 1333 Broadway; Oakland, CA 94612.

Issued in San Francisco, CA, March 8, 1985.

Vito A. Magliano,

Acting Manager.

[FR Doc. 85-8885 Filed 4-11-85; 8:45 am]

BILLING CODE 6450-01-M

Economic Regulatory Administration

[Docket No. ERA-FC-84-015; OFP Case No. 61050-9254-21-22]

Order Granting Alaska Electric Generation and Transmission, Inc., Exemption From Prohibitions of the Powerplant and Industrial Fuel Use Act of 1978

AGENCY: Economic Regulatory Administration, DOE.

ACTION: Notice.

SUMMARY: The Economic Regulatory Administration (ERA) of the Department of Energy (DOE) hereby gives notice that it has granted a permanent reliability of service exemption from the prohibitions of Title II of the Powerplant and Industrial Fuel Use Act of 1978, 42 U.S.C. 8301 *et seq.* ("FUA" or "the Act") to Alaska Electric Generation and Transmission, Inc. (AEG&T or "the petitioner"), of Palmer, Alaska. The permanent reliability of service exemption for a proposed new electric powerplant permits the use of a natural gas-fired combustion turbine with a nameplate rating of 39 MW, that will operate as a simple-cycle combustion turbine unit to produce electrical power at AEG&T's plant at Soldotna, Alaska. The new unit, identified as Soldotna Power Plant Unit No. 1, is expected to commence operation to meet load forecast electrical demands commencing in 1985. The final exemption order and detailed information on the proceeding are provided in the **SUPPLEMENTARY INFORMATION** section, below.

DATES: The order shall take effect on June 11, 1985.

The public file containing a copy of the order, other documents; and supporting materials on this proceeding is available upon request through DOE, Freedom of Information Reading Room, 1000 Independence Avenue, S.W., Room 1E-190, Washington, D.C. 20585, Monday through Friday, 9:00 a.m. to 5:00 p.m., except Federal holidays.

FOR FURTHER INFORMATION CONTACT:

Frank Duchaine, Office of Fuels Programs, Economic Regulatory Administration, 1000 Independence Avenue, S.W., Room GA-073-D, Washington, D.C. 20585 Phone (202) 252-1649

Steven E. Ferguson, Office of the General Counsel, Department of Energy, Forrestal Building, Room 6A-113, 1000 Independence Avenue, S.W., Washington, D.C. 20585, Phone (202) 252-6749

SUPPLEMENTARY INFORMATION: On July 30, 1985, AEG&T petitioned ERA under section 212(f) of FUA and 10 CFR 503.40 for a permanent reliability of service exemption for its proposed new powerplant. AEG&T proposes to install a new combustion turbine powerplant unit at Soldotna, Alaska. The new unit will operate as a base load integrated system, producing electricity to meet forecast demands, commencing with the winter of 1985-86.

Basis for Permanent Exemption Order

The permanent exemption order is based upon evidence in the record including AEG&T's certification to EPA, in accordance with 10 CFR 503.40(a)(c), that:

1. AEG&T is not able to construct an alternate fuel fired in time to prevent an impairment of reliability of service;

2. Despite diligent good faith efforts, AEG&T is not able to make the demonstration necessary to obtain a permanent exemption for lack of alternate fuel supply, site limitations, environmental requirements, inadequate capital, or State and local requirements, in the time required to prevent an impairment of reliability of service;

3. No alternate power supply exists; and

4. Use of mixtures is not feasible.

Procedural Requirements

In accordance with the procedural requirements of section 701(c) of FUA and 10 CFR 501.3(b), ERA published its Notice of Acceptance of Petition and Availability of Certification in the **Federal Register** on November 30, 1984 (49 FR 47097), commencing a 45-day public comment period.

A copy of the petition was provided to the Environmental Protection Agency for comments as required by section 701(f) of the Act. During the comment period, interested persons were afforded an opportunity to request a public hearing. The comment period closed on January 14, 1985; no comments were received and no hearing was requested.

NEPA Compliance

After review of the petitioner's environmental impact analysis, together with other relevant information, ERA has determined that the granting of the requested exemption does not constitute a major Federal action significantly affecting the quality of the human environment within the meaning of section 102(2)(C) of the National Environmental Policy Act (NEPA).

Order Granting Permanent Reliability of Service Exemption

Based upon the entire record of this proceeding, ERA has determined that AEG&T has satisfied the eligibility requirements for the requested permanent reliability of service exemption, as set forth in 10 CFR 503.40. Therefore, pursuant to section 212(c) of FUA, ERA hereby grants a permanent reliability of service exemption to AEG&T to permit the use of natural gas as the primary energy source for its proposed facility in Soldotna, Alaska.

Pursuant to section 702(c) of the Act and 10 CFR 501.69, any person aggrieved by this order may petition for judicial review thereof at any time before the 60th day following the publication of this order in the **Federal Register.**

Issued in Washington, D.C., on April 4, 1985.

Robert L. Davies,

Director, Coal & Electricity Division, Office of Fuels Programs, Economic Regulatory Administration.

[FR Doc. 85-8884 Filed 4-11-85; 8:45 am]

BILLING CODE 6450-01-M

[Docket No. ERA 82-16-NG]

Pacific Gas Transmission Company; Natural Gas Imports, Authorization To Import Natural Gas From Canada

AGENCY: Economic Regulatory Administration, Department of Energy.

ACTION: Notice of Issuance of Final Order Granting Amendments to Authorization to Import Natural Gas from Canada.

SUMMARY: The Economic Regulatory Administration (ERA) of the Department of Energy (DOE) gives notice that on April 2, 1985, the ERA Administrator issued a final opinion and order authorizing Pacific Gas Transmission Company (PGT) to import an additional 1.9 Tcf of natural gas from Canada during the period November 1, 1985, through October 31, 1993. The incremental increase in authorized volumes will permit PGT to continue to import natural gas at its currently authorized level of 1023 MMcf per day through October 31, 1993. The final order superseded DOE/ERA Opinion and Order No. 63 issued November 1, 1985, which authorized the importation of the additional gas subject to a showing by PGT that the import arrangement would provide competitively priced gas to the markets served.

The text of the opinion and order follows.

FOR FURTHER INFORMATION CONTACT:

Stanley C. Vass, Natural Gas Division, Office of Fuels Programs, Economic Regulatory Administration, U.S. Department of Energy, Forrestal Building, Room GA-017B, 1000 Independence Avenue, SW., Washington, DC. 20585, (202) 252-9482

Michael T. Skinker, Office of General Counsel, Natural Gas and Mineral Leasing, U.S. Department of Energy, Forrestal Building, Room 6E-042, 1000 Independence Avenue, SW., Washington, DC. 20585, (202) 252-6667

Issued in Washington, DC., on April 4, 1985.

James W. Workman,

Director, Office of Fuels Programs, Economic Regulatory Administration.

SUPPLEMENTARY INFORMATION:

Final Order Granting Amendments to Authorization to Import Natural Gas From Canada

[DOE/ERA Opinion and Order No. 63A]

April 2, 1985.

I. Background

On November 1, 1984, in DOE/ERA Opinion and Order No. 63 (Order No. 63),[1] the Economic Regulatory Administration (ERA) conditionally authorized the Pacific Gas Transmission Company (PGT) to import from Alberta and Southern Gas Company, Ltd. (Alberta and Southern) 1023 MMcf of natural gas per day through October 31, 1993,[2] subject to a showing prior to the flow of the gas that the import arrangement, as then structured, is competitive in Pacific Gas and Electric Company (PG&E) markets. The ERA noted that no party had questioned the need for the gas or raised the issue of security of supply. "What the parties have questioned is whether Canadian gas is the appropriate choice for meeting those needs [of the California market] if it is not competitive in the markets served." [3] Accordingly, the ERA stated that competitiveness of PGT's import arrangement would be fully evaluated before final action was taken and that the parties would be given an opportunity to comment on all aspects of the import arrangement and to request additional procedures when PGT applied to make the conditional authorization final.

On December 24, 1984, PGT filed a supplement to the original application requesting final approval of the additional volumes that were conditionally authorized in Order No. 63. In the supplement, PGT stated that it proposed to apply the terms of its renegotiated contract with Alberta and volumes to the additional volumes conditionally authorized. Those terms, submitted as part of an October 1, 1984, report by PGT to this agency, were effective November 1, 1984, for currently authorized volumes. The renegotiated contract provided for a commodity rate at the international border of $2.99 (U.S.) per MMBtu which is subject to semi-annual review and adjustment, plus a demand charge based on actually incurred costs of transportation and shipping from within Canada to the export point. PGT projects that this price structure will result in an average delivered price at the California border of $3.63 (U.S.) per MMBtu. The renegotiated contract also reduced PGT's take-or-pay obligation from 60 percent to 50 percent of daily contract quantity and eliminated the yearly, monthly, and daily minimum purchase obligations with respect to volumes PGT is currently authorized to import.

PGT asserted that the renegotiated contract's reduced minimum purchase obligations and revised price structure would enable it to market the requested additional volumes of Canadian gas competitively. PGT cited two factors in its renegotiated contract that assure competitiveness for all future purchases over the life of the import arrangement: (1) the provision for semi-annual price review and redetermination, and (2) the "equitable purchase clause" under which imported gas will be purchased on an equivalent basis with domestic gas as long as the price is competitive, combined with complete elimination of minimum physical take provisions.

In a procedural order issued January 29, 1985, the ERA provided the opportunity for parties to comment on the competitiveness of PGT's revised contract and on all aspects of PGT's import arrangement. Parties who had opposed PGT's application were notified that they must restate their opposition to the import arrangement if they were still opposed to PGT's request. The parties were also given the opportunity to request additional procedures. Responses were due February 28, 1985, and answers were due March 15, 1985.

On March 3, 1985, PGT filed a report with the ERA of a reduction in the commodity rate for Canadian gas from $2.99 to $2.92 per MMBtu, effective April 1, 1985. The price reduction resulted from the semi-annual price review and redetermination called for in the gas sale contract. PGT projected that the pricing revision would result in a delivered price for Canadian gas at the California border of $3.55 per MMBtu.

---

[1] *Pacific Gas Transmission Company*, DOE/ERA Opinion and Order No. 63, issued November 1, 1984 (1 ERA ¶ 70,574).

[2] Under FERC Docket Nos. CP 69-346 and CP 69-347, March 13, 1970 (43 FPC 418), PGT is authorized to import the following volumes:

Period	Annual volumes* (MMcf)	Average daily volumes (MMcf./d)
Present to 10/31/85	373,500	1,023
11/1/85 to 10/31/86	305,870	838
11/1/86 to 10/31/89	153,300	420
11/1/89 to 10/31/93	77,745	213

PGT applied for the following incremental volumes:

Period	Annual volumes* (MMcf)	Average daily volumes (MMcf./d)
Present to 10/31/85		
11/1/85 to 10/31/86	67,525	185
11/1/86 to 10/31/89	220,095	603
11/1/89 to 10/31/93	295,650	810

*Annual volumes were determined by multiplying average daily volumes by 365, using the more exact average daily volume of 1023.3 MMcf.

[3] *See supra* note 1.

II. Response to Procedural Order

Two responses were received to the January 29, 1985, procedural order. One was by the El Paso Natural Gas Company (El Paso) and the other by the Railroad Commission of Texas (RCT). Neither El Paso nor RCT contend that PGT's import arrangement as now structured is not competitive. However, both El Paso and RCT note that PGT's revised contract with Alberta and Southern was approved by the Canadian National Energy Board for a one-year period only, subject to yearly extensions. They also noted it was subject to review and concurrence by the affected Canadian gas producers, and could be changed as a result of the semi-annual price review and redetermination provision in the revised contract. Because of the potential for further changes, El Paso and RCT requested that the ERA condition its final approval of PGT's import arrangement so that any significant changes in the contractural terms underlying PGT's importation of Canadian gas would not become effective until after a public notice and comment period and a finding that such changes were not inconsistent with the public interest.

PGT, its affiliate PG&E, and the Public Utilities Commission of the State of California (CPUC) filed answers supporting issuance of an unconditional final order and opposing El Paso's and RCT's request for conditions requiring further review of PGT's authorization in the future. The CPUC cities the elimination of minimum physical take provisions, the reduction in take-or-pay obligations to the 50 percent level, and contract provisions providing for a competitive price through adjustments based on domestic pipeline prices, as evidence that PGT's import arrangement as now structured will remain fair and competitive. PGT and PG&E assert that there is a conflict between El Paso's approach, wherein each price redetermination would be subjected to detailed regulatory review, and the DOE's policy guidelines which encourage provisions that allow price adjustments during the life of an import agreement as evidence of the competitiveness of the arrangement. PGT also states that its obligation under Section 590.407 of the ERA's administrative procedures to report any changes in its import arrangement ensures that the public interest is adequately protected.

III. Decision

PGT's application has been evaluated to determine if the arrangement meets the public interest requirements of Section 3 of the Natural Gas Act. Under Section 3, an import is to be authorized unless there is a finding that it "will not be consistent with the public interest." [4] The Administrator is guided by the Secretary of Energy's policy relating to the regulation of natural gas imports.[5] Under these policy guidelines, the competitiveness of an import arrangement in the markets served is the primary consideration for meeting the public interest test.

In Order No. 63, the ERA authorized PGT to import the additional volumes of Canadian natural gas, subject to a showing prior to the flow of the gas on November 1, 1985, that PGT's import arrangement, as then structured, is competitive in the California market. Accordingly, the only issue remaining to be resolved is the competitiveness of PGT's import arrangement over the term of the contractural arrangement.

The substantial reduction in PGT's take-or-pay obligations, the elimination of its minimum physical take obligations, the reduction in the price of the Canadian gas imported by PGT, and the flexibility provided by the semi-annual review and redetermination provisions amply demonstrate that PGT's import arrangement is competitive and market-responsive, and can be expected to remain so over the term of the underlying contract.

Although El Paso and RCT have requested that the ERA condition this authorization to require opportunity to comment before any significant changes in PGT's contractual arrangements become effective, such conditions are viewed as unnecessary and as an obstacle to maintaining a market-responsive import arrangement. The revised gas sales contract allows PGT to negotiate price changes, as was recently done to reduce the commodity rate, in order for the Canadian gas to remain competitive. It is not our intention to intervene in the negotiation of such contract adjustments so long as PGT is operating within the terms of its existing import arrangement.

Should any substantive contract amendments be made at a future date affecting the facts or circumstances upon which PGT's authorization is based, PGT has a continuing obligation, under the ERA's administrative procedures, to report such amendments to the ERA for review. Section 590.407 emphasizes that whenever such changes are contrary to or otherwise not permitted by the existing authorization, an application to amend the existing authorization must be filed. Accordingly, the conditions requested by El Paso and RCT are unnecessary and their requests for them are denied.

Finally, all opposition to PGT's proposed extension appears to have ended. The arrangement apparently now satisfies all of the parties.

After talking into consideration all information in the record of this proceeding, I find that the condition in Order No. 63 has been met—that PGT has demonstrated that its import arrangement, as now structured, is competitive in the market served. Therefore, granting the amendment as requested is not inconsistent with the public interest.

Order

For the reasons set forth above, pursuant to Section 3 of the Natural Gas Act, it is ordered that:

A. The import authorization previously issued by the Federal Power Commission to Pacific Gas Transmission Company (PGT) under Docket Nos. G-17350, G-17351 and G-17352 on August 5, 1960 (24 FPC 134), as amended in Docket Nos. CP 65-213, CP 65-214 and CP 65-215 on June 14, 1966 (35 FPC 1003), as amended in Docket Nos. CP 67-187 and CP 67-188 on October 30, 1968 (40 FPC 1147), and as amended in Docket Nos. CP 69-346 and CP 69-347 on March 13, 1970 (43 FPC 418), is hereby further amended to increase the authorized volumes to permit PGT to import up to 1023 MMcf of Canadian natural gas per day for the period November 1, 1985 through October 31, 1993.

B. The above-referenced orders are further amended to incorporate PGT's November 1, 1984, revisions to its gas sale contract with Alberta and Southern Gas Company, Ltd. for previously authorized volumes and for volumes authorized by this order.

C. With respect to the natural gas authorized to be imported by this order, PGT shall file with the ERA in the month following each calendar quarter, quarterly reports showing, by month, the quantities of gas imported, the average price paid per MMBtu for both the demand and commodity components, and the average delivered price at the California border per MMBtu.

Issued in Washington, DC., April 2, 1985.

Rayburn Hanzlik,

Administrator, Economic Regulatory Administration.

[FR Doc. 85-8900 Filed 4-11-85; 8:45 am]

BILLING CODE 6450-01-M

[4] 15 U.S.C. 717b.

[5] 49 FR 6684, February 2, 1984.

Federal Energy Regulatory Commission

[Docket Nos. ER85-393-000, et al.]

Electric Rate and Corporate Regulation Filings; Georgia Power Company, et al.

April 5, 1985.

Take notice that the following filings have been made with the Commission:

1. Georgia Power Company

[Docket No. ER85-393-000]

Take notice that on March 28, 1985, Georgia Power Company (Georgia Power) tendered for filing a contract executed between it and the Administrator of the Southeastern Power Administraton (SEPA) acting on behalf of the United States Government, Department of Energy. The contract is filed with the Federal Energy Regulatory Commission because certain of its provisions provide for the payment of a transmission charge by the Government for transmission of capacity and energy to certain preference customers designated by the Government.

Georgia Power requests an effective date of February 1, 1985, and therefore requests waiver of the Commission's notice requirements.

Comment date: April 17, 1985, in accordance with Standard Paragraph E at the end of this notice.

2. Montaup Electric Company

[Docket No. ER85-397-000]

Take notice that on March 28, 1985, Montaup Electric Company (Montaup) tendered for filing a short-term system sale agreement between Montaup and Massachusetts Municipal Wholesale Electric Company (MMWEC), dated August 15, 1982. This Agreement provides for a sale of capacity and associated energy from Montaup to MMWEC. Montaup will provide this capacity and energy from six fossil fuel generating units (Somerset Units 5 & 6; Canal Units 1 & 2; Cleary Units 9 & 9A).

Through an oversight, filing of this contract was not made in the required 60-day notice period. In order to permit Montaup and MMWEC to achieve mutual benefits from this system agreement, Montaup requests waiver of the 60-day notice requirement in order to permit this rate schedule to become effective on August 15, 1982. The waiver, if granted, will have no effect upon purchasers under any other rate schedule.

Montaup indicates that it has served copies of the filing on Massachusetts Municipal Wholesale Electric Company and the Massachusetts Commission.

Comment date: April 19, 1985, in accordance with Standard Paragraph E at the end of this notice.

3. Montana Power Company

[Docket No. ER85-394-000]

Take notice that on March 28, 1985, Montana Power Company (Montana) tendered for filing a revised Appendix I as required by Exhibit C for retail sales in accordance with the provisions of the Residential Purchase and Sale Agreement ("Agreement") between Montana and the Bonneville Power Administration ("BPA").

The Agreement was entered into pursuant to the Pacific Northwest Electric Power Planning and Conservation Act, Pub. L. 96-501. The Agreement provides for the exchange of electric power between Montana and BPA for the benefit to Montana's residential and farm customers.

Montana requests an effective date of August 3, 1984, and therefore requests waiver of the Commission's notice requirements.

A copy of the filing was served upon BPA.

Comment date: April 17, 1985, in accordance with Standard Paragraph E at the end of this notice.

4. Montana Power Company

[Docket No. ER85-395-000]

Take notice that on March 28, 1985, Montana Power Company (Montana) tendered for filing a revised Appendix I, as required by Exhibit C for retail sales in accordance with the provisions of the Residential Purchase and Sale Agreement (Agreement) between Montana and the Bonneville Power Administration (BPA).

The Agreement was entered into pursuant to the Pacific Northwest Electric Power Planning and Conservation Act, Pub. L. 96-501. The Agreement provides for the exchange of electric power between Montana and BPA for the benefit of Montana's residential and farm customers.

Montana requests an effective date of April 17, 1984, and therefore requests waiver of the Commission's notice requirements.

A copy of the filing was served upon BPA.

Comment date: April 19, 1985, in accordance with Standard Paragraph E at the end of this notice.

5. Montaup Electric Company

[Docket No. ER85-396-000]

Take notice that on March 28, 1985, Montaup Electric Company (Montaup) tendered for filing Exhibit A's designated Series No. II, Taunton No. 13, specifying electric power to be transmitted under Service Agreement with Taunton dated September 14, 1978; North Attleborough No. 2, specifying electric power to be transmitted under the Service Agreement with North Attleborough dated February 28, 1977; and MMWEC No. 2, specifying electric power to be transmitted under the Service Agreement with MMWEC dated November 1, 1981.

Taunton has contracted to purchase varying amounts (0-25,000 kw) from Northeast utilities from November 8, 1982 through four weeks notice by either party.

This contract was not utilized until October, 1984 and EUA had not previously submitted an exhibit A. Montaup requests that the Exhibit A be allowed to become effective as of October 1, 1984.

North Attleborough has contracted to purchase varying amounts (0-10-000 kw) from Taunton's Cleary No. 9 from November 1, 1984 through Life of Unit. The current purchase is 2,000 kW through April 30, 1985.

Montaup requests that this Exhibit A be allowed to become effective November 1, 1984.

MMWEC has contracted to purchase 5,000 kw from Taunton's Cleary No. 9 from November 1, 1984 through April 30, 1985.

Montaup requests that this Exhibit A be allowed to become effective November 1, 1984.

Montaup requests waiver of the 60-day notice requirement to permit the effective dates requested above. Montaup was notified of the transactions too late to comply with that requirement.

Montaup indicates that it has served copies of the filings on the parties to the transactions and the pertinent state commissions.

Comment date: April 1985, in accordance with Standard Paragraph E at the end of this notice.

Standard Paragraphs

E. Any person desiring to be heard or to protest said filing should file a motion to intervene or protest with the Federal Energy Regulatory Commission, 825 North Capitol Street, NE., Washington, DC 20426, in accordance with Rules 211 and 214 of the Commission's Rules of Practice and Procedure (18 CFR 385.211 and 385.214). All such motions or protests should be filed on or before the comment date. Protests will be considered by the Commission in determining the appropriate action to be taken, but will not serve to make protestants parties to the proceeding.

Any person wishing to become a party must file a motion to intervene. Copies of this filing are on file with the Commission and are available for public inspection.

Kenneth F. Plumb,

Secretary.

[FR Doc. 85-8800 Filed 4-11-85; 8:45 am]

BILLING CODE 6717-01-M

[Docket No. RP85-72-001]

Algonquin Gas Transmission Co.; Filing of Substitute Revised Tariff Sheets

April 8, 1985.

Take notice that on March 29, 1985, Algonquin Gas Transmission Company (Algonquin Gas) transmitted for filing the following substitute revised tariff sheets to its FERC Gas Tariff, Second Revised Volume No. 1:

Substitute First Revised Sheet No. 611
Substitute First Revised Sheet No. 612

According to § 381.103(b)(2)(iii) of the Commission's regulations (18 CFR § 381.103(b)(2)(iii)), the date of filing is the date on which the Commission receives the appropriate filing fee, which in the instant case was not until April 2, 1985.

Algonquin Gas states that such Substitute First Revised Sheets modify Section 11 of the General Terms and Conditions, relating to Assignment, and replace First Revised Sheet Nos. 611 and 612, which had been filed February 12, 1985, in Docket No. RP85-72-000. Algonquin Gas states that First Revised Sheet Nos. 611 and 612 thus are being withdrawn.

More specifically, Algonquin Gas states that it is clarifying such assignment provision to indicate the procedure for obtaining any necessary certificate authority related to an assignment, and to provide for superseding Service Agreements so that the results of an authorized assignment are reflected in an updated agreement. Algonquin Gas proposes that its tariff sheets should become effective 30 days after filing, or on April 29, 1985.

Algonquin Gas states that it has served a copy of its filing on each affected party and interested state commissions.

Any person desiring to be heard or to protest said filing should file a motion to intervene or a protest with the Federal Energy Regulatory Commission, 825 North Capitol Street, N.E., Washington, D.C. 20426, in accordance with Rules 211 and 214 of the Commission's Rules of Practice and Procedure (18 CFR 385.211, 385.214). All such motions or protests should be filed on or before April 15, 1985. Protests will be considered by the Commission in determining the appropriate action to be taken, but will not serve to make protestants parties to the proceeding. Any person wishing to become a party must file a motion to intervene. Copies of this filing are on file with the Commission and are available for public inspection.

Kenneth F. Plumb,

Secretary.

[FR Doc. 85-8804 Filed 4-11-85; 8:45 am]

BILLING CODE 6717-01-M

[Docket No. EL85-25-000]

Applied Energy Services, Inc. v. Oklahoma Corporation Commission; Complaint

April 9, 1985.

Take notice that on April 4, 1985, Applied Energy Services, Inc. (AES) submitted for filing a complaint against Oklahoma Corporation Commission (OCC).

The issue in this complaint order concerns Rule 58(H) of the OCC General Rules. Rule 58(H) reads:

> The utility shall include in each contract with a cogenerator or small power producer the provision, and put the cogenerator and small power producer on actual notice, that the Commission may, after proper notice and hearing, change the terms and otherwise finalize experimental purchase tariffs and special contracts.

AES states:

(1) That Rule 58(H) of the OCC General Rules is in direct violation of FERC's rules implementing PURPA, and;

(2) That Rule 58(H) represents bad public policy, and;

(3) That FERC enforcement action against OCC Rule 58(H) would be consistent with its policy statement regarding PURPA Section 210.

AES requests the Commission to undertake an enforcement action seeking enforcement of the FERC's rule against OCC.

Any person desiring to be heard or to protest said filing should file a motion to intervene or protest with the Federal Energy Regulatory Commission, 825 North Capitol Street NE., Washington, D.C. 20426, in accordance with Rules 211 and 214 of the Commission's Rules of Practice and Procedure (18 CFR 385.211, 385.214). All such motions or protests should be filed on or before April 29, 1985. Protests will be considered by the Commission in determing the appropriate action to be taken but will not serve to make protestants parties to the proceeding. Any person wishing to become a party must file a motion to intervene. Copies of this filing are on file with the Commission and are available for public inspection.

Kenneth F. Plumb,

Secretary.

[FR Doc. 85-8805 Filed 4-11-85; 8:45 am]

BILLING CODE 6717-01-M

[Project No. 8254-001]

Burnt Ranch Stables; Surrender of Preliminary Permit

April 10, 1985.

Take notice that Burnt Ranch Stables, Permittee for the Burnt Ranch Stables Project, FERC No. 8254, has requested that its preliminary be terminated. The preliminary permit for Project No. 8254 was issued on November 26, 1984, and would have expired on April 30, 1986. The project would have been located on Hennesey Creek, in Trinity County, California.

The Permittee filed the request on March 7, 1985, and the preliminary permit for Project No. 8254 shall remain in effect through the thirtieth day after issuance of this notice unless that day is a Saturday, Sunday or holiday as described in 18 CFR 385.2007, in which case the permit shall remain in effect through the first business day following that day. New applications involving this project site, to the extent provided for under 18 CFR Part 4, may be filed on the next business day.

Kenneth F. Plumb,

Secretary.

[FR Doc. 85-8806 Filed 4-11-85; 8:45 am]

BILLING CODE 6717-01-M

[Project No. 7814-001]

Cedar Falls Utilities; Surrender of Preliminary Permit

April 10, 1985.

Take notice that Cedar Falls Utilities, Permittee for the proposed Ceder Falls Dam Hydro Project No. 7814, has requested that its preliminary permit be terminated. The premit was issued on June 6, 1984, and would have expired November 31, 1985. The project would have been located on the Cedar River in Black Hawk County, Iowa. The Permittee cites that the proposed project is not economically feasible as the basis for the surrender request.

The Permittee filed the request on March 21, 1985, and the preliminary permit for Project No. 7814 shall remain in effect through the thirtieth day after issuance of this notice unless that day is a Saturday, Sunday or Holiday as described in 18 CFR 385.2007, in which case the permit shall remain in effect

through the first business day following that day. New applications involving this project site, to the extent provided for under 18 CFR Part 4, may be filed on the next business day.

Kenneth F. Plumb,

Secretary.

[FR Doc. 85-8807 Filed 4-11-85; 8:45 am]

BILLING CODE 6717-01-M

[Docket No. G-10133-001, et al.]

CNG Producing Co.; Application of Succession in Interest From MAPCO Oil & Gas Co. to CNG Producing Co.

April 9, 1985.

Take notice that on February 1, 1985, CNG Producing Company, (CNG) of 705 South Elgin Avenue, Post Office Box 2115, Tulsa, Oklahoma 74101-2115, as successor in interest to MAPCO Oil & Gas Company, (MAPCO) filed an application to amend certain certificates currently held by MAPCO to show CNG as certificate holder and to redesignate the related rate schedules listed in the attached Appendix.

Effective as of January 1, 1985, MAPCO Oil & Gas Company sold to CNG Producing Company substantially all of its onshore domestic oil and gas properties.

Any person desiring to be heard or to make any protest with reference to said application should on or before April 24, 1985, file with the Federal Energy Regulatory Commission, Washington, D.C. 20426, petitions to intervene or protests in accordance with the requirements of the Commission's Rules of Practice and Procedure (18 CFR 395.211, .214). All protests filed with the Commission will be considered by it in determining the appropriate action to be taken but will not serve to make the protestants parties to the proceeding. Persons wishing to become parties to a proceeding or to participate as a party in any hearing therein must file petitions to intervene in accordance with the Commission Rules.

Under the procedure herein provided for, unless otherwise advised, it will be unnecessary for applicants to appear or to be represented at the hearing.

Kenneth F. Plumb,

Secretary.

Appendix

MAPCO rate schedule No.	Docket No.
GRS 1	G-10133
GRS 2	G-15050
GRS 4	G-15052
GRS 5	G-15052
GRS 8	G-16146
GRS 16	G-19480
GRS 17	G-20148
GRS 19	C174-302
GRS 20	C174-646
GRS 21	C175-030
GRS 22	C175-151
GRS 24	C176-397
GRS 26	C177-747
GRS 28	C184-415
MAPCO Oil & Gas Company	CNG Producing Company

[FR. Doc. 85-8808 Filed 4-11-85; 8:45 am]

BILLING CODE 6717-01-M

[Docket Nos. ST79-16-003, et al.]

Delhi Gas Pipeline Corp. et al.; Extension Reports

April 9, 1985.

The companies listed below have filed extension reports pursuant to section 311 of the Natural Gas Policy Act of 1978 (NGPA) and Part 284 of the Commission's regulations giving notice of their intention to continue transportation and sales of natural gas for an additional term of up to 2 years. These transactions commenced on a self-implementing basis without case-by-case Commission authorization. The sales may continue for an additional term if the Commission does not act to disapprove or modify the proposed extension during the 90 days preceding the effective date of the requested extension.

The table below lists the name and addresses of each company selling or transporting pursuant to Part 284; the party receiving the gas; the date that the extension report was filed; and the effective date of the extension. A letter "B" in the Part 284 column indicates a transportation by an interstate pipeline which is extended under § 284.105. A letter "C" indicates transportation by an intrastate pipeline extended under § 284.125. A "D" indicates a sale by an intrastate pipeline extended under § 284.146. A "G" indicates a transportation by an interstate pipeline pursuant to § 284.221 which is extended under § 284.105. The following symbols are used for transactions pursuant to a blanket certificate issued under § 284.222 of the Commission's Regulations: A "G(HT)", "G(HS)" or "G(HA)", respectively, indicates transportation, sale or assignments by a Hinshaw pipeline; a "G(LT)" indicates transportation by a local distribution company, and a "G(LS)" indicates sales or assignments by a local distribution company.

Any person desiring to be heard or to make any protests with reference to said extension report should on or before April 24, 1985, file with the Federal Energy Regulatory Commission, Washington, D.C. 20426, a motion to intervene or a protest in accordance with the requirements of the Commission's Rules of Practice and Procedure (18 CFR 385.211 or 385.214). All protests filed with the Commission will be considered by it in determining the appropriate action to be taken but will not serve to make the protestants party to a proceeding. Any person wishing to become a party to a proceeding or to participate as a party in any hearing therein must file a motion to intervene in accordance with the Commission's Rules.

Kenneth F. Plumb,

Secretary.

Docket No.	Trasnporter/seller	Recipient	Date filed	Part 284 subpart	Effective date
ST79-16-003	Delhi Gas Pipeline Corp., 1700 Pacific Ave., Dallas, TX 75201	Transwestern Pipeline Co	03-05-85	D	06-04-85
ST79-34-002	Houston Pipe Line Co., P.O. Box 1188, Houston, TX 77001	El Paso Natural Gas Co	03-11-85	C	06-09-85
ST79-38-002	Oasis Pipe Line Co., P.O. Box 1188, Houston, TX 77001	do	03-11-85	C	06-09-85
ST81-358-002 [1]	Northern Natural Gas Co., 2223 Dodge St., Omaha, NE 68102	Delhi Gas Pipeline Corp	03-11-85	B	06-08-85
ST83-34-002	Columbia Gulf Transmission Co., P.O. Box 683, Houston, TX 77001	Louisiana Intrastate Gas Corp	03-13-85	B	06-30-85
ST83-485-001	El Paso Natural Gas Co., P.O. Box 1492, El Paso, TX 79978	Intratex Gas Co	03-04-85	B	06-02-85
ST83-502-001	Houston Pipe Line Co., P.O. Box 1188, Houston, TX 77001	Southern Natural Gas Co	03-14-85	C	06-15-85
ST83-515-001	ANR Pipeline Co., 500 Renaissance Center, Detroit, MI 48243	Spindletop Gas Distribution Corp	03-01-85	B	06-01-85
ST83-519-001 [1]	do	do	03-06-85	B	06-01-85
ST83-520-001 [1]	do	do	03-06-85	B	06-01-85
ST83-525-001	Texas Eastern Transmission Corp. P.O. Box 2521, Houston, TX 77001	Southern Natural Gas Co	03-04-85	G	06-15-85
ST83-529-001	United Gas Pipe Line Co., P.O. Box 1478, Houston, TX 77001	do	03-08-85	G	06-08-85
ST83-530-001	do	LGS Intrastate, Inc	03-08-85	B	06-06-85
ST83-533-001	Southern Natural Gas Co., P.O. Box 2563, Birmingham, AL 35202	United Gas Pipe Line Co	03-11-85	G	06-05-85
ST83-534-001	United Gas Pipe Line Co., P.O. Box 1478, Houston, TX 77001	Southern Natural Gas Co	03-08-85	G	06-09-85

Docket No.	Trasnporter/seller	Recipient	Date filed	Part 284 subpart	Effective date
ST83-537-001	Southern Natural Gas Co., P.O. Box 2563, Birmingham, AL 35202	United Gas Pipe Line Co	03-11-85	G	06-09-85
ST83-571-002	Delhi Gas Pipeline Corp., 1700 Pacific Ave., Dallas, TX 75201	Bridgeline Gas Distribution Co	03-04-85	D	06-02-85
ST83-573-001	do	LGS Intrastate, Inc	03-08-85	D	06-06-85

[1] These extension reports were filed after the date specified by the Commission's Regulation, and shall be the subject of a further Commission order.
NOTE—The noticing of these filings does not constitute a determination of whether filings comply with the Commission's Regulations.

[FR Doc. 85-8809 Filed 4-11-85; 8:45 am]
BILLING CODE 6717-01-M

[Docket No. RP85-128-000]

Equitable Gas Co., a Division of Equitable Resources, Inc.; Petition for Waiver of Refund Requirements

April 8, 1985.

Take notice that on March 29, 1985, Equitable Gas Company, a division of Equitable Resources, Inc. (Equitable) tendered for filing a petition for a waiver of certain portions of Section 154.38 of the Commission's Regulations, and of Equitable's FERC Gas Tariff, First Revised Volume No. 1, First Revised Sheet Nos. 6b through 6d, Item 6, "Purchased Gas Cost Rate Adjustments". The above-mentioned Commission regulation and tariff provision require the passthrough to jurisdictional customers of refunds received by Equitable from its pipeline suppliers. Equitable is requesting a waiver of these requirements as they pertain to Revere Natural Gas Company (Revere), a jurisdictional customer purchasing gas service from Equitable under Rate Schedule GS-1. As of March 6, 1985, Revere was in arrears to Equitable for a total of $200,213.96 for said gas service. Equitable contends that, under the circumstances, cash refunds or purchased gas adjustment credits to Revere are inappropriate, and Equitable requests that the Commission authorize it to use the refund amounts otherwise due Revere as an offset against the arrearages owed, until such time as the arrearages are paid in full.

Any person desiring to be heard or to protest said filing should file a motion to intervene or a protest with the Federal Energy Regulatory Commission, 825 North Capital Street, N.E., Washington, D.C. 20426, in accordance with Rules 211 and 214 of the Commission's Rules of Practice and Procedure (18 CFR 385.211, 385.214). All such motions or protests should be filed on or before April 15, 1985. Protests will be considered by the Commission in determining the appropriate action to be taken, but will not serve to make protestants parties to the proceeding. Any person wishing to become a party must file a motion to intervene. Copies of this filing are on file with the Commission and are available for public inspection.

Kenneth F. Plumb,

Secretary.

[FR Doc. 85-8810 Filed 4-11-85; 8:45 am]
BILLING CODE 6717-01-M

[Docket No. CI76-192-000, et al.]

FEC Offshore Productive, Inc., Successor to Florida Exploration Co.; Application To Amend Certificates of Public Convenience and Necessity and To Redesignate Rate Schedules

April 9, 1985.

Take Notice that on December 31, 1984, FEC Offshore Productive, Inc. (FEC) of 3040 Post Oak Boulevard, Suite 200, Houston, Texas 70056, filed an application for redesignation of certificates of public convenience and necessity and related rate schedules, as listed in the attached appendix as a successor-in-interest to Florida Exploration Company (Florida).

By Assignment, Bill of Sale and Conveyance effective September 21, 1984, Florida Assigned its interest in certain offshore blocks as listed in the attached appendix to FEC.

Any person desiring to be heard or to make any protest with reference to said application should on or before April 24, 1985, file with the Federal Energy Regulatory Commission, Washington, D.C., 20426, petitions to intervene or protests in accordance with the requirements of the Commission's Rules of Practice and Procedure (18 CFR 385.211, .214). All protests filed with the Commission will be considered by it in determining the appropriate action to be taken but will not serve to make the protestants parties to the proceeding. Persons wishing to become parties to a proceeding or to participate as a party in any hearing therein must file petitions to intervene in accordance with the Commission Rules.

Under the procedure herein provided for, unless otherwise advised, it will be unnecessary for applicants to appear or to be represented at the hearing.

Kenneth F. Plumb,

Secretary.

APPENDIX.—FLORIDA EXPLORATION COMPANY, OFFSHORE RATE SCHEDULES 12/8/84

Rate schedule No.	Docket No.	Offshore area/block	Purchaser (contract date)
9	CI76-192	S. Timbalier, Block 185.	Transco (1-15-73).
10	CI76-305	Grand Isle, Block 76.	Florida Gas Transmission (12-5-75).
12	CI76-616	Ship Shoal, Block 246.	Transco (3-20-74).
13	CI77-50	Vermilion, Blocks 21 and 22.	Florida Gas Transmission (9-12-76).
27	CI77-835	S. Timbalier, Block 86.	Trunkline (8-29-77).
30	CI78-518	Grand Isle, Blocks 75 and 76.	Florida Gas Transmission (2-14-78).
33	CI78-510	E. Cameron, Block 118.	Texas Eastern (8-15-74).
36	CI78-1247	S. Marsh Islands, Blocks 149 and 150.	Florida Gas Transmission (8-2-78).
38	CI79-645	Mississippi Canyons, 194 Field (Unit).	Florida Gas Transmission (8-1-80).
39	C181-21	W. Cameron, Block 65.	Florida Gas Transmission (9-25-80).
40	C181-96	Sabine Pass, Blocks 10 and 17.	Florida Gas Transmission (6-1-80).
41	C182-1	Galveston, Block 223.	Transco (8-26-81).
42	C182-218	Main Pass, Block 37.	Tennessee (3-25-82).
C&K (Enstar) Small Producer Certificate	CS71-1102.	Vermilion, Block 171.	Sea Robin PL (3-1-78) JOA Sale.

[FR Doc. 85-8811 Filed 4-11-85; 8:45 am]
BILLING CODE 6717-01-M

[Project No. 8451-001]

Mega Renewables; Surrender of Preliminary Permit

April 10, 1985.

Take notice that Mega Renewables, Permittee for the Upper Power Project, FERC No. 8451, has requested that its preliminary permit be terminated. The preliminary permit for Project No. 8451 was issued on December 13, 1984, and would have expired on May 31, 1986. The project would have been located on

Slate Creek, in Shasta County, California.

The Permittee filed the request on March 1, 1985, and the preliminary permit for Project No. 8451 shall remain in effect through the thirtieth day after issuance of this notice unless that day is a Saturday, or holiday as described in 18 CFR 385.2007, in which case the permit shall remain in effect through the first business day following that day. New applications involving this project site, to the extent provided for under 18 CFR Part 4, may be filed on the next business day.

Kenneth F. Plumb,

Secretary.

[FR Doc. 85-8812 Filed 4-11-85; 8:45 am]

BILLING CODE 6717-01-M

[Docket No. CI75-73-000, et al.]

Mitchell Energy Corp.; Notice of Application of Succession in Interest From Mitchell Energy Offshore Corp. to Mitchell Energy Corp.

April 9, 1985.

Take notice that on March 19, 1985, Mitchell Energy Corporation (Mitchell), of P.O. Box 4000 The Woodlands, Texas 77387-4000 filed an application for a certificate of public convenience and necessity to cover certain interests it has recently acquired through merger with Mitchell Energy Offshore Corporation (Mitchell Energy).

Mitchell, By Certificate of Ownership and Merger dated January 31, 1985, merged and assumed all the interests of Mitchell Energy. Sales of production from properties previously owned by Mitchell Energy were authorized under Certificates of Public Convenience and Necessity issued to Mitchell Energy in Docket Nos. CI75-73, CI75-648, CI76-244 and CI81-222. Mitchell seeks authorization to continue the sales as previously authorized. Further, Mitchell requests that Mitchell Energy Gas Rate Schedule Nos. 3, 4, 5 and 6 be redesignated as Mitchell Energy Corporation Rate Schedules.

Any person desiring to be heard or to make any protest with reference to said application should on or before April 24, 1985, file with the Federal Energy Regulatory Commission, Washington, D.C., 20426, petitions to intervene or protests in accordance with the requirements of the Commission's Rules of Practice and Procedure (18 CFR 385.211, .214). All protests filed with the Commission will be considered by it in determining the appropriate action to be taken but will not serve to make the protestants parties to the proceeding. Persons wishing to become parties to a proceeding or to participate as a party in any hearing therein must file petitions to intervene in accordance with the Commission Rules.

Under the procedure herein provided for, unless otherwise advised, it will be unnecessary for applications to appear or to be represented at the hearing.

Kenneth F. Plumb,

Secretary.

[FR Doc. 85-8813 Filed 4-11-85; 8:45 am]

BILLING CODE 6717-01-M

[Project No. 8087-001]

The Nuclear Energy Group, Inc.; Surrender of Preliminary Permit

April 10, 1985.

Take notice that the Nuclear Energy Group, Inc., Permittee for the proposed Morgantown Lock and Dam Project No. 8087, requested that its preliminary permit be terminated. The preliminary permit was issued on September 24, 1984, and would have expired on February 28, 1986. The project would have been located on the Monongahela River in Monongalia County, West Virginia.

The Permittee filed the request on March 22, 1985, and the preliminary permit for Project No. 8087 shall remain in effect through the thirtieth day after issuance of this notice unless that day is a Saturday, Sunday or holiday as described in 18 CFR 385.2007, in which case the permit shall remain in effect through the first business day following that day. New applications involving this project site, to the extent provided for under 18 CFR Part 4, may be filed on the next business day.

Kenneth F. Plumb,

Secretary.

[FR Doc. 85-8814 Filed 4-11-85; 8:45 am]

BILLING CODE 6717-01-M

[Project No. 8169-001]

The Nuclear Energy Group, Inc.; Hydro Systems Division; Surrender of Preliminary Permit

April 10, 1985.

Take notice that the Nuclear Energy Group, Inc.; Hydro Systems Division, Permittee for the proposed Carlyle Reservoir Dam Project No. 8169, requested by letter dated March 18, 1985, that their preliminary permit be terminated. The preliminary permit was issued on October 31, 1984, and would have expired on September 30, 1986. The project would have been located on the Kaskaskia River in Clinton County, Illinois.

The Permittee filed the request on March 22, 1985, and the preliminary permit for Project No. 8169 shall remain in effect through the thirtieth day after issuance of this notice unless that day is a Saturday, Sunday or holiday as described in 18 CFR 385.2007, in which case the permit shall remain in effect through the first business day following that day. New applications involving this project site, to the extent provided for under 18 CFR Part 4, may be filed on the next business day.

Kenneth F. Plumb,

Secretary.

[FR Doc. 85-8815 Filed 4-11-85; 8:45 am]

BILLING CODE 6717-01-M

[Docket No. G-2570-002, et al.]

Phillips Oil Company (Successor In Interest To Aminoil, Inc.); Application for Certificates of Public Convenience and Necessity and Request for Redesignation of Rate Schedules

April 9, 1985.

Take notice that on March 19, 1985, Phillips Oil Company (Phillips) of 336 HS&L Building, Bartlesville, Oklahoma 74004, filed an application for certificate public convenience and necessity to render service previously authorized by the Commission under certificate previously issued to Aminoil Inc., and requests that the related rate schedules listed in the attached Appendix be redesignated.

The certificate application results from the merger between Phillips Oil Company and Aminoil, Inc., pursuant to Delaware law effective January 1, 1985.

Any person desiring to be heard or to make any protest with reference to said application should on or before April 24, 1985, file with the Federal Energy Regulatory Commission, Washington, D.C. 20426 petitions to intervene or protests in accordance with the requirements of the Commission's Rules of Practice and Procedure (18 CFR 385.211, .214). All protests filed with the Commission will be considered by it in determining the appropriate action to be taken but will not serve to make the protestants parties to the proceeding. Persons wishing to become parties to a proceeding or to participate as a party in any hearing therein must file petitions to intervene in accordance with the Commission Rules.

Under the procedure herein provided for, unless otherwise advised, it will be

unnecessary for applicants to appear or to be represented at the hearing.

Kenneth F. Plumb,

Secretary.

APPENDIX

RS No.	Purchaser	Certificate docket
1	Northwest Central Pipeline Corp	G-2570
4 [1]	El Paso Natural Gas Co	G-11627
8	Williston Basin Interstate Pipeline Co	CI61-1271
10	Northwest Central Pipeline Corp	CI64-612
14	Lone Star Gas Co	G-3978
15	do	CI62-98
16	do	CI63-394
17 [1]	Transcontinental Gas Pipe Line Corp	CI68-639
20 [1]	Sea Robin Pipeline Co	CI63-949
21 [1]	Southern Natural Gas Co	CI69-1097
24	Lone Star Gas Co	CI66-20
26	Panhandle Eastern Pipe Line Co	CI70-374
27 [1]	do	CI70-375
29	Lone Star Gas Co	G-6668
30	do	CI62-739
31	do	CI63-577
33	do	G-6668
34	do	CI66-20 CI71-226
35	do	CI71-910
39	Texas Eastern Transmission Corp	CI74-735
40	Tennessee Gas Pipeline Co	CI75-225
41	El Paso Natural Gas Co	CI75-484
42	Northwest Pipeline Corp	CI76-166
43	Texas Eastern Transmission Corp	CI77-655
45	Florida Gas Transmission Co	CI78-1061
46	Texas Eastern Transmission Corp	CI76-1279
47	do	CI79-137
48	Natural Gas Pipeline Co of America	CI79-170
50	Transcontinental Gas Pipe Line Corp	CI79-577
51	United Gas Pipe Line Co	CI78-910
52	Tennessee Gas Pipeline Co	CI80-457
53	do	CI80-458
54	ANR Pipeline Co	CI80-452
55	do	CI80-453
56	Columbia Gas Transmission Corp	CI80-486
58	Texas Eastern Transmission Corp	CI81-367
59	do	CI81-407
60	Columbia Gas Transmission Corp	CI77-244
61	do	CI77-853
62	Natural Gas Pipeline Co of America	CI76-209
63	Trunkline Gas Co	CI76-379
64	Transcontinental Gas Pipe Line Corp	CI76-327
65	Natural Gas Pipeline Company of America.	CI77-656
67	do	CI78-751
68	do	CI78-752
69	do	CI78-135
70	do	CI79-90
71	Transcontinental Gas Pipe Line Corp	CI79-171
72	Natural Gas Pipeline Co of America	CI79-454
73	do	CI79-455
74	do	CI79-459
75	do	CI79-576
76	do	CI79-578
77	Sea Robin Pipeline Co	CI80-451
78	Natural Gas Pipeline Co of America	CI81-118
79	ANR Pipeline Co	CI81-356
80	Tennessee Gas Transmission Co	CI60-399
81	Southern Natural Gas Co	CI61-173
83	do	CI68-538
84	do	CI68-1218
85	do	CI60-607
86	Tennessee Gas Pipeline Co	CI80-204
87	Natural Gas Pipeline Co of America	CI82-215
88	Tennessee Gas Pipeline Co	CI82-209
89	Trunkline Gas Co	CI82-303
90	Texas Eastern Transmission Corp	CI82-310
91	Transcontinental Gas Pipe Line Corp	CI82-313
92	do	CI82-315
93	do	CI82-357
94	do	CI82-358
95	Natural Gas Pipeline Co of America	CI79-219
96	Texas Eastern Transmission Corp	CI84-333
97	Neches Gas Distribution Co	CI-64-612
98	The city of Long Beach, California	CI85-93

[1] Denotes Operator, et al.

[FR Doc. 85-8816 Filed 4-11-85; 8:45 am]

BILLING CODE 6717-01-M

[Project No. 7926-001]

Richard and Charles Gresham; Surrender of Preliminary Permit

April 10, 1985.

Take notice that Richard and Charles Gresham, Permittees for the Spread Creek Project No. 7926 have requested that their preliminary permit be terminated. The preliminary permit was issued on May 31, 1984, and would have expired on October 31, 1985. The project would have been located on Spread Creek in Lincoln County, Montana.

The Permittees filed the request on March 4, 1985, and the preliminary permit for Project No. 7926 shall remain in effect through the thirtieth day after issuance of this notice unless that day is a Saturday, Sunday or holiday as described in 18 CFR 385.2007, in which case the permit shall remain in effect through the first business day following that day. New applications involving this project site, to the extent provided for under 18 CFR Part 4, may be filed on the next business day.

Kenneth F. Plumb,

Secretary.

[FR Doc. 85-8817 Filed 4-11-85; 8:45 am]

BILLING CODE 6717-01-M

[Project No. 8502-001]

Trinity Bar Hydro Limited; Surrender of Preliminary Permit

April 10, 1985.

Take notice that Trinity Bar Hydro Limited, Permittee for the Trinity Bar Hydroelectric Project, FERC No. 8502, has requested that its preliminary permit be terminated. The preliminary permit for Project No. 8502 was issued on December 24, 1984, and would have expired on May 31, 1986. The project would have been located on Big Bar Creek, in Trinity County, California.

The Permittee filed the request on February 25, 1985, and the preliminary permit for Project No. 8502 shall remain in effect through the thirtieth day after issuance of this notice unless that day is a Saturday, Sunday or holiday as described in 18 CFR 385.2007, in which case the permit shall remain in effect through the first business day following that day. New applications involving this project site, to the extent provided for under 18 CFR Part 4, may be filed on the next business day.

Kenneth F. Plumb,

Secretary.

[FR Doc. 85-8818 Filed 4-11-85; 8:45 am]

BILLING CODE 6717-01-M

[Docket Nos. ER85-405-000, et al.]

Baltimore Gas & Electric Co. et al.; Electric Rate and Corporate Regulation Filings

April 9, 1985.

Take notice that the following filings have been made with the Commission:

1. Baltimore Gas & Electric Company

[Docket No. ER85-405-000]

Take notice that on March 29, 1985, Baltimore Gas & Electric Company (BG&E) tendered for filing as an initial rate schedule an agreement (the Agreement) between Connecticut Light and Power Company (CL&P), Western Massachusetts Electric Company (WMECO together with CL&P are the NU Companies) and BG&E. The Agreement, dated as of March 26, 1985 provides for sale by BG&E of energy from its system ("system energy") to the NU Companies on a daily or weekly basis (a "transaction"). BG&E states that the timing of transactions cannot be accurately estimated but that BG&E would offer to sell such system energy to the NU Companies only when it was economical to do so. The NU Companies would only accept such offer if it was economical to do so.

BG&E requests that the Commission waive its customary notice period and allow the Agreement to become effective on March 29, 1985.

According to BG&E copies of this filing have been mailed to CL&P and WMECO.

Comment date: April 23, 1985, in accordance with Standard Paragraph E at the end of this notice.

2. Central Power & Light Company

[Docket No. ER85-402-000]

Take notice that on March 29, 1985, Central Power and Light Company (Company) tendered for filing a change in rate for 1985 under the Transmission Services Agreement (Agreement) between Company and Houston Lighting and Power (HL&P). Accompanying the filing is the Rate Schedule change (designated TS No. 69 revised, supplement No. 2) and a cost of service study.

The company has requested that the rate schedule change be made effective as of January 1, 1985, and therefore requests waiver of the Commission's notice requirements.

Comment date: April 22, 1985, in accordance with Standard Paragraph E at the end of this notice.

3. Commonwealth Edison Company

[Docket No. ER85-403-000]

Take notice that on March 29, 1985, Commonwealth Edison Company (Commonwealth) tendered for filing proposed changes in its currently effective Rider 7, Meter Lease, the Rider 20, Fuel Adjustment, applicable to the Company FERC Electric Service Tariff, Rate 79. The changes incorporated in proposed Rider 7-PR and 20-PR conforms the definition of cost of fuel to the calculation used for service on and after January 1, 1985.

Commonwealth requests an effective date of May 29, 1985, without suspension, for Rider 7-PR and an effective date of January 1, 1985, without suspension for Rider 20-PR. Commonwealth requests waiver of the Commission's notice requirements.

Copies of this filing were served upon the customers affected by the filing and the Illinois Commerce Commission.

Comment date: April 23, 1985, in accordance with Standard Paragraph E at the end of this notice.

4. Commonwealth Edison Company

[Docket No. ER85-404-000]

Take notice that on March 29, 1985, Commonwealth Edison Company (Company) tendered for filing proposed changes in its FERC Electric Service Tariff Rate 79 and Riders 7 and 20. The Company has proposed a two step increase. Step 1, proposed to become effective May 29, 1985, would increase revenues from jurisdictional sales and service by $7,879,000 and Step 2, proposed to become effective May 30, 1985, would increase revenues by $18,400,000, based on the 12 month period ending December 31, 1985.

The Company states that the proposed increase in charges is made necessary by increases in the costs of providing electric service.

Copies of the filing were served upon the customers affected by the filing and the Illinois Commerce Commission.

Comment date: April 23, 1985, in accordance with Standard Paragraph E at the end of this notice.

5. Jersey Central Power & Light Company

[Docket No. ER85-401-000]

Take notice that on March 29, 1985, Jersey Central Power & Light (Jersey Central) tendered for filing proposed changes in its currently effective rate schedule for full requirements service to its wholesale customers and in its supplemental and wheeling service to Allegheny Electric Cooperative Inc.

The proposed rates are in two phases: Phase A designed to reflect an anticipated major power purchase from Pennsylvania Power & Light Company (PP&L) and Phase B which does not reflect this purchase. The rate increase under Phase A reflects significant demand costs associated with the PP&L purchase which are more than offset by energy savings. Giving recognition to the energy savings under the PP&L purchase as a rate reducing item, Jersey Central asserts that both phases may be characterized as increases of approximately 9%.

Jersey Central requests an effective date of May 30, 1985 for Phase A and May 31, 1985 for Phase B.

Copies of this filing were served upon each customer and upon the New Jersey Board of Public Utilities.

Comment date: April 22, 1985, in accordance with Standard Paragraph E at the end of this notice.

6. Northern States Power Company (Wisconsin)

[Docket No. ER85-398-000]

Take notice that on March 28, 1985, Northern States Power Company of Eau Claire, Wisconsin (NSP(W)) tendered for filing a proposed change in its currently effective rate schedule for full requirements service to its thirteen wholesale customers.

The proposed rate schedule will increase revenues from the sales to these customers by $1,399,979 based on sales for the January 1, 1985 to December 31, 1985 test year. The rate schedule change includes a revised W-1 rate for NSP(W)'s thirteen all-requirements municipal customers.

NSP(W) requests an effective date of May 30, 1985 for the filing.

Comment date: April 22, 1985, in accordance with Standard Paragraph E at the end of this notice.

7. Pacific Gas and Electric Company

[Docket No. ER85-399-000]

Take notice that on March 29, 1985, Pacific Gas and Electric Company (PGandE) tendered for filing changes to the rate schedules under the Interconnection Agreement between PGandE and Northern California Power Agency ("the NCPA Agreement") and to the Interconnection Agreement between Pacific Gas and Electric Company and the City of Santa Clara ("the Santa Clara Agreement").

The agreements provide for firm transmission service between points of receipt and delivery. NCPA and Santa Clara wish to include a new point of receipt at PGandE's Telsa Substation. This change also will not affect the revenue collected from NCPA or Santa Clara, assuming that the power purchased from DWR at Telsa serves as replacement power, additional charges will apply in accordance with previously filed rates under Schedule G of the Agreement.

PGandE states that since the contractual arrangements have just concluded, PGandE must request a waiver of the Commission's notice requirements. Therefore, PGandE respectively requests an effective date of January 1, 1985. No customers under any other rate schedules will be affected if such waiver is granted. DWR has requested that such service is not to be provided after May 31, 1985. Accordingly, PGandE requests that this transmission service must be terminated as of June 1, 1985.

Comment date: April 22, 1985, in accordance with Standard Paragraph E at the end of this notice.

8. Sierra Pacific Power Company

[Docket No. ER85-406-000]

Take notice that on April 1, 1985, Sierra Pacific Power Company (Sierra) tendered for filing a notice of a two-phased change in rates and charges in rate schedule R-1 of its FERC Electric Tariff, Volume 1. Sierra also proposes to cancel Rate Schedule R-2 and to continue service heretofore provided under that Schedule under the revised R-2 Schedule. These rates apply to Sierra's wholesale firm power service. Based upon the 12-month estimated test period ending June 30, 1986, Sierra estimates that the proposed Phase 1 rates would increase annual revenues from FERC jurisdictional sales and services by approximately $1,788,000 or 24.5%. The proposed Phase 2 rates would increase such revenues by an additional $188,000 or 2.1%. Additionally, the proposed rates reflect continuation of several rate designs, including: (1) a purchase power adjustment; (2) voltage discount; (3) a power factor adjustment; and (4) a demand ratchet for partial requirements service. The proposed effective date for both phases is June 1, 1985.

Sierra states that the reason for the proposed increase in rates and charges is to allow Sierra to earn a return on its investment in a major addition to rate base arising from the commercial operation of Valmy 2. The rate increase is also required to allow Sierra to begin to recover increases in other costs that have occurred since its last rate increase filing submitted in November, 1981.

Copies of this filing were served upon Sierra's jurisdictional customers, the

California Public Utilities Commission and the Nevada Public Service Commission.

Comment date: April 23, 1985, in accordance with Standard Paragraph E at the end of this notice.

9. Virginia Electric and Power Company

[Docket No. ER85-400-000]

Take notice that on March 29, 1985, Virginia Electric and Power Company (VEPCO) tendered for filing proposed changes in its electric resale rate schedules presently on file with the Commission which are applicable to Rural Electric Cooperatives and Wholesale Municipalities. Based on the test period 12 months ending December 31, 1985 conditions, the Company estimates that the proposed changes in resale rates will increase annual revenues from Cooperative Customers other than Old Dominion Electric Cooperative, by $.60 million, increase annual revenues from Old Dominion Electric Cooperative by $6.39 million, and from Municipal Customers by $.157 million.

The Company states that the increase in wholesale rates is needed to compensate for the costs associated with the Bath County Pumped Storage Project, to cover the increased costs of doing business, and to achieve a reasonable overall rate of return of 11.28 percent.

VEPCO requests an effective date of May 29, 1985.

Copies of the proposed rates were served upon all of the Company's jurisdictional Wholesale Customers, the Virginia State Corporation Commission and the North Carolina Utilities Commission.

Comment date: April 22, 1985, in accordance with Standard Paragraph E at the end of this notice.

Standard Paragraphs

E. Any person desiring to be heard or to protest said filing should file a motion to intervene or protest with the Federal Energy Regulatory Commission, 825 North Capitol Street, NW., Washington, D.C., 20426, in accordance with Rules 211 and 214 of the Commission's rules of practice and procedure (18 CFR 385.211 and 385.214). All such motions or protests should be filed on or before the comment date. Protests will be considered by the Commission in determining the appropriate action to be taken, but will not serve to make the protestants parties to the proceeding. Any person wishing to become a party must file a motion to intervene. Copies of this filing are on file with the Commission and are available for public inspection.

Kenneth F. Plumb,

Secretary.

[FR Doc. 85-8914 Filed 4-11-85; 8:45 am]

BILLING CODE 6717-01-M

Office of Hearings and Appeals

Implementation of Special Refund Procedures

AGENCY: Office of Hearings and Appeals, DOE.

ACTION: Notice of Implementation of Special Refund Procedures.

SUMMARY: The Office of Hearings and Appeals of the Department of Energy solicits comments concerning the appropriate procedures to be followed in refunding seven consent order funds totalling $832,707.76 to members of the public. This money is being held in escrow following the settlement of enforcement proceedings involving the following parties: Arkla Chemical Corporation of Shreveport, Louisiana (Case No. HEF-0030), Eugene Endicott of Redmond, Oregon (Case No. HEF-0069), Field Oil Company of Ogden, Utah (Case No. HEF-0071), F.O. Fletcher, Inc. of Tacoma, Washington (Case No. HEF-0074, Glaser Gas, Inc. of Calhan, Colorado (Case No. HEF-0080), Ideal Gas Company, Inc. of Nyssa, Oregon (Case No. HEF-0093), and Inland U.S.A., Inc. of St. Louis, Missouri (Case No. HEF-0096).

DATE AND ADDRESS: Comments must be filed within 30 days of publication of this notice in the **Federal Register** and should be addressed to the Office of Hearings and Appeals, Department of Energy, 1000 Independence Avenue, SW., Washington, D.C. 20585. All comments should conspicuously display a reference to the appropriate case number.

FOR FURTHER INFORMATION CONTACT: Richard W. Dugan, Associate Director, Office of Hearings and Appeals, 1000 Independence Avenue, SW., Washington, DC. 20585, (202) 252-2860.

SUPPLEMENTARY INFORMATION: In accordance with § 205.282(b) of the procedural regulations of the Department of Energy, 10 CFR 205.282(b), notice is hereby given of the issuance of the Proposed Decision and Order set out below. The Proposed Decision relates to consent orders entered into by Arkla Chemical Corporation of Shreveport, Louisiana, Eugene Endicott of Redmond, Oregon, Field Oil Company of Ogden, Utah, F.O. Fletcher, Inc. of Tacoma, Washington, Glaser Gas, Inc. of Calhan, Colorado, Ideal Gas Company, Inc. of Nyssa, Oregon, and Inland U.S.A., Inc. of St. Louis, Missouri (hereinafter collectively referred to as the consent order firms). Each consent order involves a particular audit period and a distinct consent order fund as set forth in the Proposed Decision. The consent orders settled possible pricing violations in the consent order firms' sales of refined petroleum products to customers during the relevant audit periods.

The Proposed Decision sets forth the procedures and standards that the DOE has tentatively formulated to distribute the contents of the escrow accounts funded by the consent order firms pursuant to the consent orders. The DOE has tentatively decided that the consent order funds should be distributed to those customers of the consent order firms who establish that they were injured by one of the consent order firms' alleged overcharges. Such customers will receive refunds based on the amount they were allegedly overcharged, according to DOE audit files. However, applications for Refund should not be filed at this time. Appropriate public notice will be given when the submission of claims is authorized.

Any member of the public may submit written comments regarding the proposed refund procedures. Commenting parties are requested to submit two copies of their comments. Comments should be submitted within 30 days of publication of this notice in the **Federal Register**, and should be sent to the address set forth at the beginning of this notice. All comments received in the proceeding will be available for public inspection between the hours of 1:00 to 5:00 p.m., Monday through Friday, except federal holidays, in the Public Docket Room of the Office of Hearings and Appeals, located in Room 1E-234, 1000 Independence Avenue, SW., Washington, DC. 20585.

Dated: April 3, 1985.

George B. Breznay,

Director, Office of Hearings and Appeals.

Proposed Decision and Order of the Department of Energy

Special Refund Procedures

April 3, 1985.

Names of Firms: Arkla Chemical Corporation, Eugene Endicott, Field Oil Company, F.O. Fletcher, Inc., Glaser Gas, Inc., Ideal Gas Company, Inc., Inland U.S.A., Inc.

Date of Filing: October 13, 1983.

Case Numbers: HEF-0030; HEF-0069; HEF-0071; HEF-0074; HEF-0080; HEF-0093; and HEF-0096.

Under the procedural regulations of the Department of Energy (DOE), the Economic Regulatory Administration (ERA) of the DOE may request the Office of Hearings and Appeals (OHA) to formulate and implement special procedures to make refunds in order to remedy the affects of alleged violations of the DOE regulations. *See* 10 CFR Part 205, Subpart V. The ERA filed such a petition on October 13, 1983, requesting that the OHA implement special refund proceedings to distribute funds received pursuant to Consent Orders entered into by the DOE and the following parties: Arkla Chemical Company (Arkla) of Shreveport, Louisiana; Eugene Endicott (Endicott) of Redmond, Oregon; Field Oil Company (Field) of Ogden, Utah; F.O. Fletcher, Inc. (Fletcher) of Tacoma, Washington; Glaser Gas, Inc. (Glaser) of Calhan, Colorado; Ideal Gas, Inc. (Ideal) of Nyssa, Oregon; and Inland U.S.A., Inc. (Inland) of St. Louis, Missouri (hereinafter collectively referred to as the consent order firms). The aggregate amount of funds involved in this proceeding is $832,707.76.

I. Background

Each of the consent order firms is a "reseller" or "reseller-retailer" of "refined petroleum products," as these terms were defined in 10 CFR 212.31. ERA audits of the consent order firms revealed possible violations of the Mandatory Petroleum Price Regulations. Subsequently, each of these firms entered into a separate Consent Order with the DOE in order to settle its disputes concerning certain sales of refined petroleum products.[1] Each Consent Order refers to the ERA's allegations of overcharges, but notes that no findings of violation were made. Additionally, each Consent Order states that the consent order firm does not admit that it committed any such violations.

Pursuant to these Consent Orders, the firms agreed to pay to the DOE specified amounts in settlement of their potential liability regarding sales to their respective customers during the consent order periods. The firms' payments are currently being held in separate interest-bearing escrow accounts pending distribution by the DOE. The names and locations of the firms, the consent order amounts, the products covered by the Consent Orders, and the dates of the consent order periods are set forth in Appendices A–G to this Proposed Decision and Order.

II. Jurisdiction

The procedural regulations of the DOE set forth general guidelines by which the OHA may formulate and implement a plan of distribution for funds received as a result of an enforcement proceeding. 10 CFR Part 205, Subpart V. The Subpart V process may be used in situations where the DOE is unable to readily identify persons who may have been injured by alleged or adjudicated violations, or unable to ascertain the amounts of such persons' injuries. For a more detailed discussion of Subpart V and the authority of the OHA to fashion procedures to distribute refunds obtained as part of settlement agreements, *see Office of Enforcement*, 9 DOE ¶82,552 (1982); *Office of Enforcement*, 9 DOE ¶82,508 (1981); *Office of Enforcement*, 8 DOE ¶82,597 (1981) (hereinafter cited as *Vickers*). After reviewing the record in the present case, we have concluded that a Subpart V proceeding is an appropriate mechanism for distributing the seven consent order funds. We therefore propose to grant the ERA's petition and assume jurisdiction over distribution of these funds.

III. Proposed Refund Procedures

Insofar as possible, these consent order funds should be distributed to those customers of the consent order firms who were injured by the alleged price violations. In each case, the ERA audit file pertaining to the Consent Order lists the names of customers who purchased refined petroleum products from the consent order firm, along with the pro rata amounts the ERA calculated the customers should be eligible to receive in a refund proceeding. This information is listed in the Appendices to this Proposed Decision and Order.[2] In our view, these identified firms and their downstream customers are most likely the only parties who were adversely affected by any overcharges by the consent order firms. However, we recognize that there may be other purchasers of refined petroleum products from these firms who were not listed in the ERA audit files and who may have been injured by the pricing practices of the consent order firms during the relevant consent order period. We therefore propose to accept applications from any party that can show injury resulting from the consent order firms' alleged overcharges.

Many of the identified customers of the consent order firms are resellers, i.e., retailers and wholesalers. We propose that these firms, and any other claimants who resold petroleum products purchased from one of the consent order firms, be required to demonstrate that they did not pass on to their customers price increases implemented by the consent order firm. *See, e.g., Vickers*. In order to qualify for a refund, firms that resold petroleum products purchased from one of the consent order firms must show that during the consent order period they would have maintained their prices for the petroleum products at the same level had the alleged overcharges not occurred. While there are a variety of ways to make this showing, a reseller should generally demonstrate that at the time it purchased petroleum products from the consent order firm, market conditions would not permit it to increase its prices to pass through the additional costs associated with the alleged overcharges to its customers. In addition, the reseller must show that it maintained a "bank" of unrecovered costs in order to demonstrate that it did not subsequently recover these costs by increasing its prices.[3] The maintenance of a bank will not, however, automatically establish injury. *See Tenneco Oil Co./Chevron U.S.A., Inc.*, 10 DOE ¶ 85,014 (1982); Vickers Energy Corp./Standard Oil Co., 10 DOE ¶ 85,036 (1982); *Vickers Energy Corp./Koch Industries, Inc.*, 10 DOE ¶ 85,038 (1982).

As in many prior special refund cases, we will adopt a presumption of injury with respect to small claims. The use of presumptions in refund cases is specifically authorized by applicable DOE procedural regulations. Section 205.282(e) of those regulations states that:

[1] Endicott did not enter into a Consent Order with the DOE. However, in order to settle all claims and disputes between Endicott and the DOE, the firm agreed to pay $10,000 to the DOE under the terms of a Stipulation for Consent to Judgement approved by the United States District Court for the District of Oregon on June 10, 1980. *Endicott V. Schelesinger*, Civil No. 79-129 (D.C. Ore. 1980). In view of the similarity between the terms of the Stipulation and the terms usually agreed upon in a Consent Order, we will hereinafter refer to the Stipulation as a Consent Order.

[2] The names listed in the Appendices do not include customers who were entitled to receive direct refunds (*see* fn. 6) or customers who purchased at service stations operated by two of the consent order firms (*see* fn. 8). In addition, we currently do not have addresses for several of the customers who were allegedly overcharged by Arkla and Field (*see* Appendices A and C). We request that anyone knowing the locations at these firms or individuals inform this Office of their addresses.

[3] Some of the motor gasoline sales covered by the Consent Orders entered into by Field and Inland occurred subsequent to the amendment of the retailer price rule that eliminated the bank requirement for retailers. *See* 10 CFR 212.93(a)(2), 44 FR 42542 (July 18, 1979) (effective July 15, 1979). Accordingly, retailers who purchased motor gasoline from Field or Inland will not be required to submit bank information for purchases made after July 15, 1979.

In establishing standards and procedures for implementing refund distributions, the Office of Hearings and Appeals shall take into account the desirability of distributing the refunds in an efficient, effective and equitable manner and resolving to the maximum extent practicable all outstanding claims. In order to do so, the standards for evaluation of individual claims may be based upon appropriate presumptions.

10 CFR 205.282(e). In the present case, we are adopting a presumption that reseller claimants seeking small refunds were injured by the pricing practices settled in each Consent Order. This presumption is based on a number of considerations. *See, e.g.*, Uban Oil Co., 9 DOE ¶ 82,541 (1982). As we have noted in many previous refund decisions, there may be considerable expenses involved in gathering the types of data needed to support a detailed claim of injury. In order to prove such a claim, an applicant must compile and submit detailed factual information regarding the impact of alleged overcharges which took place many years ago. This procedure is generally time-consuming and expensive, and in the case of small claims, the cost to the firm of gathering this factual information, and the cost to the OHA of analyzing it, may be many times the expected refund amount. Failure to allow simplified application procedures for small claims could therefore operate to deprive injured parties of the opportunity to obtain a refund. The use of this presumption is also desirable from an administrative standpoint, because it allows the OHA to process a large number of refund claims quickly and use its limited resources more efficiently. Finally, we know that these smaller claimants did purchase covered products from one of the consent order firms and were in the chain of distribution where the alleged overcharges occurred. Therefore, they bore some impact of the alleged overcharges, at least initially. The small claim presumption eliminates the need for a claimant to submit and the OHA to analyze detailed proof of what happened downstream of that initial impact.

Under the presumption we are adopting, a reseller or retailer claimant will not be required to submit any additional evidence of injury beyond purchase volumes if its refund claim is based on purchases below a threshold level.[4] Previous OHA refund decisions have expressed the threshold either in terms of a ceiling on purchases from the consenting firm, or as a dollar refund amount. However, in *Texas Oil & Gas Corp.*, 12 DOE ¶ 85,069 (1984), we noted that describing the threshold in terms of a dollar amount rather than a purchase volume figure would better effectuate our goal of facilitating disbursements to applicants seeking relatively small refunds. *Id.* at 88,210. We propose that the same approach be followed in this case. The adoption of a threshold level below which a claimant is not required to submit any further evidence of injury beyond volumes purchased is based on several factors. As noted above, we are especially concerned that the cost to the applicant and the government of compiling and analyzing information sufficient to show injury not exceed the amount of the refund to be gained. In the present case, where the time period of each Consent Order is quite distant, we believe that the establishment of a presumption of injury for all claims of $5,000 or less is reasonable.[5] *See id.; Marion Corp.*, 12 DOE ¶ 85,014 (1984).

In addition to the presumption we are adopting regarding small reseller or retailer claimants, we are making a finding that end-users or ultimate consumers, including businesses that are unrelated to the petroleum industry, were injured by the alleged overcharges settled in the Consent Orders. Unlike regulated firms in the petroleum industry, members of this group generally were not subject to price controls during the consent order period, and they were not required to keep records which justified selling price increases by reference to cost increases. For these reasons, an analysis of the impact of the alleged overcharges on the final prices of non-petroleum goods and services would be beyond the scope of a special refund proceeding. *See Office of Enforcement, Economic Regulatory Administration: In the Matter of PVM Oil Associates, Inc.*, 10 DOE ¶ 85,072 (1983); *see also Texas Oil & Gas Corp.*, 12 DOE ¶ 85,069 at 88,209 (1984). We have therefore concluded that end-users of petroleum products purchased from one of the consent order firms need only document their purchase volumes from the consent order firm to make a sufficient showing that they were injured by the alleged overcharges.[6] On the other hand, refund applicants whose business operations were subject to the DOE regulatory program and who purchased petroleum products consumed as fuel or as raw materials will not be considered as consumers for purposes of the showing of injury. *See Seminole Refining, Inc.*, 12 DOE ¶ ——, HEF-0221 (February 22, 1985)

IV. Calculation of Refund Amounts

We must further determine the proper method for dividing the consent order funds among successful applicants. Although we recognize that the ERA audit files do not provide conclusive evidence as to the identity of all injured parties or the amount of money they should receive in a Subpart V proceeding, we believe that this information can be used to fashion a refund plan which will correspond closely to the injuries experienced. *See, e.g., Marion.* Specifically, we note that the ERA audits were very well-defined, and the Consent Orders were limited to the same products and time periods as the audits. We therefore propose that the maximum refunds for the firms listed in the Appendices who make the requisite showing set forth in Part III of this Proposed Decision be equivalent to the potential refund amounts calculated by the ERA.[7] These refund amounts,

[4] We propose that resellers who made only spot purchases from one of the consent order firms be presumed to have suffered no injury. They would therefore be ineligible for any refund, even a refund at or below the threshold level. As we have previously stated with respect to spot purchasers:

[T]hose customers tend to have considerable discretion in where and when to make purchases and would therefore not have made spot market purchases of [the firm's product] at increased prices unless they were able to pass through the full amount of [the firm's] quoted selling price at the time of purchase to their own customers.

Vickers, 8 DOE at 85,396-97; *see also Office of Special Counsel*, 10 DOE ¶ 85,048 at 88,200 (1982). The same rationale holds true in the present case. Accordingly, in order to overcome the rebuttable presumption that they were not injured, in addition to the proof of injury required of those resellers claiming more than the threshold amount, any reseller claimants who were spot purchasers must submit additional evidence to establish that they were unable to exercise considerable discretion as to where and when they made the purchase(s) on which their refund claim is based.

[5] Any claimant whose potential refund exceeds the threshold amount may elect to apply for a refund based on the threshold amount.

[6] The Consent Orders entered into by Field, Fletcher, Glaser, and Ideal required each consent order firm to refund a certain amount directly to its end-user customers. The funds in the escrow accounts are thus primarily intended for distribution to the firms' reseller and retailer customers. Accordingly, an end-user of refined petroleum products purchased from Field, Fletcher, Glaser, or Ideal will not be eligible for a refund in this proceeding unless it certifies that it did not receive a direct refund from the consent order firm.

[7] The transactions covered by the Arkla Consent Order (all sales of motor gasoline, diesel fuel, naphtha, and kerosene by Arkla during the period November 1, 1973 through January 31, 1974) are also covered by a separate Consent Order entered into by the DOE and Arkansas Louisiana Gas Company (ALGC), of which Arkla is a wholly-owned subsidiary. Specifically, the ALGC Consent Order covers sales of motor gasoline, diesel fuel, and other refined products by ALGC and Arkla during the period September 1, 1973 through December 31, 1975. The ALGC Consent Order is the subject of a separate Subpart V proceeding (Case No. HEF-0201). We propose that the potential claimants in this proceeding (*see* Appendix A to this Proposed

Continued

which are listed in the Appendices, represent a prorated portion of the alleged overcharges by the consent order firms.[8] Successful refund applicants will also receive a pro rata share of the interest which has accured since the deposit of the funds into the escrow accounts.

We further propose to establish a minimum amount of $15 for refund claims. We have found through our experience in prior refund cases that the cost of processing claims in which refunds are sought for amounts less than $15 outweighs the benefits of restitution in those situations. *See, e.g., Uban Oil Co.*, 9 DOE ¶ 82,541 at 85,225 (1982). *See also* 10 CFR 205.286(b).

Refund applications in these proceedings should not be filed until issuance of a final Decision and Order. Detailed procedures for filing applications will be provided in the final Decision and Order. Before disposing of any of the funds received, we intend to publicize the distribution process and to provide an opportunity for any affected party to file a claim. In addition to publishing copies of the proposed and final decisions in the **Federal Register**, copies will be provided to the consent order firms' customers whose names and addresses we have obtained from the ERA audit files. If appropriate, we also intend to publicize this proceeding in local newspapers in the areas where the consent order firms conducted business.

In the event that money remains after all first stage claims have been disposed of, these funds could be distributed in various ways. We will not be in a position to decide what should be done with any remaining funds until the first stage refund procedure is completed.

It Is Therefore Ordered That:

The refund amounts remitted to the Department of Energy by the consent order firms listed in Appendices A–G to this Proposed Decision and Order will be distributed in accordance with the foregoing Decision.

Appendix A—Arkla Chemical Corporation, P.O. Box 21734, Shreveport, LA 71151

Consent Order Period: Nov. 1, 1973 to Jan. 31, 1974.

Products Covered: Motor gasoline, diesel fuel, naphtha, kerosene.

Consent Order Amount: $87,500.

Identified customers	Potential refund [1]
Aerobic System of Arkansas, P.O. Box 6, Gravel Ridge, AR 72206	$122
ARCO Building Materials, P.O. Box 232, Little Rock, AR 72203	41
ARCO Metals, P.O. Box 6716, Shreveport, LA 71106	598
Albers Feed & Farm Supply (Carnation Country Store), 1100 Wheeler Ave., Fort Smith, AR 72901	80
Albert Harper, 8701 Mize Road, Little Rock AR 72206	117
A.L.K. Moore Trucking, P.O. Box 5006, Bossier City, LA 71111	396
Anchor Paint Mfg. Co., 2317 Cantrell Road, Little Rock, AR 72206	41
Arkansas Cement Corp., P.O. Box 21734, Shreveport, LA 71151	3,222
Arkansas Foundry, P.O. Box 231, Little Rock, AR 72203	834
Arkansas Oklahoma, 115 North 12th Street, Fort Smith, AR 72901	1,202
Arkansas Petroleum Sales, P.O. Box 5237, Little Rock, AR 72205	1,316
Armstrong Tool & Supply, P.O. Box 1468, McAlester, OK 74501	316
A. Tenenbaum Co., P.O. Box 15138 GMF, Little Rock, AR 72231	26
Fall City Co., P.O. Box 39, Nashville, AR 71852	3,286
Earling Construction Co., Route 1, Box 348-A, Lavaca, AR 72941	26
Barnwell Shingle Tab, P.O. Box 7881, Shreveport, LA 71107	19
Bigelow Robinson Co., 1115 Pine St., North Little Rock, AR 72114	47
Big K Development, 13700 Beckenham, Little Rock, AR 72207	48
Bob Guthrie Contractor, 3615 Dixon Road, Little Rock, AR 72206	30
Bob's Trailer Villa, 3816 N. 43 Street, Fort Smith, AR 72901	72
Bowles & Eden Equipment, Route 2, Box 33 B, North Little Rock, AR 72118	31
Brandon Van & Storage, P.O. Box 9828, Little Rock, AR 72219	43
Braswell Motor Freight, P.O. Box 7007, Shreveport, LA 71107	465
Brown Janitor Service, P.O. Box 4581, Little Rock, AR 72204	30
Eugene Oil Co., P.O. Box 147, Monroe, LA 71201	616
Byers Oil Co., P.O. Box 725, Hope, AR 71801	1,616
C & C Electric, P.O. Box 656, Little Rock, AR 72203	40
Caddo Parish School Board, P.O. Box 37000, Shreveport, LA 71130	1,060
Calumet Refining Co., Star Route, Box 128, Princeton, LA 71067	140
Capital Welding Supply, P.O. Box 3015, Little Rock, AR 72203	58
Capital Chemical, 2326 Cantrell Road, Little Rock, AR 72202	81
Car Care, 6015 Mitchell Dr., Little Rock, AR 72209	284
Carl Staggs Plumbing, 15300 Bauch Lane, Little Rock, AR 72206	72
Casey Grocery & Station, Cecil, AR 72930	265
Chandeler Trailer Convey, P.O. Box 9410, Little Rock, AR 72219	231
City of Shreveport, P.O. Box 31109, Shreveport, LA 71130	20
C.J. Michao, 1821 Parker, North Little Rock, AR 72114	24
Clark Equipment Co., P.O. Box 2619, Cantrell Booker Road, Little Rock, AR 72203	83
Coca-Cola Bottling Co., P.O. Box 1114, Shreveport, LA 71163	316
Curtis Barker Oil Co., P.O. Box 6081, Shreveport, LA 71106	680
Cunningham-Nelson Chevrolet, P.O. Box 167, Ozark, AR 72949	117
D & S Self Service, 3838 North Market St., Shreveport, LA 71107	311
Dan Glover Trucking Co., 3820 Mabelvale Pike, Little Rock, AR 72204	1,147
Daniels Moving & Storage, P.O. Box 427, North Little Rock, AR 72115	40
D. D. McCowen, 8301 West 36th St., Little Rock, AR 72204	16
Deaton Oil Co., P.O. Box D, Murfreesboro, AR 71958	916
Descoteau Heating & Air, 3603 Jacksonville Hwy., North Little Rock, AR 72117	39
Diliaha Fruit Co., P.O. Box 546, Little Rock, AR 72203	54
Ditch Witch Trencher of LA., 3815 East Texas, Bossier City, LA 71111	64
D. J. Pipe & Steel Co., 1220 South Zero, Fort Smith, AR 72901	107
DLM Inc., P.O. Box 37, Malvern, AR 72104	75
D. N. Marshall & Son, Rt. 4, Booneville, AR 72927	280
Donald Kirk Plastering, 319 Gill, Little Rock, AR 72205	49
Duggan Machine Co., Inc., P.O. Box 7333, Shreveport, LA 71107	18
East Texas Motor Freight, P.O. Box 7176, Shreveport, LA 71107	77
Economy Oil Co., P.O. Box 8117, Shreveport, LA 71108	2,134
E. E. Stillman, 48 Stillman Loop-Route, Benton, AR 72015	40
Enterprise Products Co., 3416 Barksdale Blvd., Bossier City, LA 71112	3,012
Enterprise Tool, Inc., Mail Route Road, Little Rock, AR 72205	64
Erection Service, P.O. Box 231, Little Rock, AR 72203	99
Esquire Marble Co., 15104 Sardis Road, Mabelvale, AR 72103	25
Fagan Electric Co., Inc., 3401 West 65th St., Little Rock, AR 72206	300
Fort Smith Plating Co., 4302 Wheeler Ave., Fort Smith, AR 72901	60
Fred Stewart Co., 429 South Zero, Fort Smith, AR 72901	204
Frost-Whited Co., Inc., P.O. Box 37150, Shreveport, LA 71103	16
Goodwin Plumbing Co., 8009 Texas Road, Fort Smith, AR 72903	31
Greene Valley Farms, P.O. Box 4517, Asher Station, Little Rock, AR 72214	48
Griffin-Legett Funeral, 5800 West 12th St., Little Rock, AR 72204	35
H & R Oil Co., 204 N. Walcott St., Jefferson, TX 75657	345
Halliburton Co., P.O. Box 5335, Bossier City, LA 71111	486
Highway Dumphaulers, P.O. Box 3164, Little Rock, AR 72203	430
Holco Oil Co., 1010 Horton Street, Minder, LA 71055	98
Hurns Superior, 1011 East 30th St., Little Rock, AR 72206	30
Hyde Naphtha Co., P.O. Box 837, Marshall, TX 75670	65
Industrial Supply Inc., 1509 Rebsamen Park Rd., Little Rock, AR 72203	34

Decision) be allowed to apply for a refund in either proceeding concerning their purchases from Arkla during the period covered by both Consent Orders (November 1, 1973 through January 31, 1974). In the present proceeding, each claimant's refund amount will be determined according to the potential refund amount calculated by the ERA and listed in Appendix A. In the ALGC proceeding, we have proposed that each claimant's refund amount be determined according to a volumetric refund factor. *See Arkansas Louisiana Gas Co.*, 6 Fed. Energy Guidelines ¶90,052 (Proposed Decision and Order, January 9, 1985). No claimant will be allowed to receive a refund in both proceedings for purchases made during the Arkla consent order period.

[8] According to our records, Arkla and Inland also sold motor gasoline to end-users at company-owned service stations. The ERA audit files pertaining to Arkla and Inland do not list alleged overcharges for customers who purchased motor gasoline from these service stations (*see* Appendices A and G). We therefore propose to establish a claims procedure whereby these unidentified customers can apply for a refund based on the volume of motor gasoline which they purchased from service stations owned by Arkla or Inland. *See Vickers*. The volumetric factor will be determined by dividing the portion of the consent order amount designated for distribution to customers at Arkla and Inland's service stations by the estimated total volume of motor gasoline sold at the service stations during the consent order period. This results in a per gallon volumetric refund amount for each gallon of motor gasoline which an applicant purchased from Arkla or Inland during the consent order period. In the case of Arkla, the per gallon volumetric refund amount is $0.003716 ($371.00 divided by 99,826 gallons). In the case of Inland, the per gallon volumetric refund amount is $0.005283 ($145,275 divided by 27,499,100 gallons).

Identified customers	Potential refund [1]
Industrial Towel, P.O. Box 1650, Little Rock, AR 72203	94
Inglis Construction Co., Rt. 3 Box 327-A, Little Rock, AR 72205	172
Irish Pipe Coatings Co., P.O. Box 18000, Shreveport, LA 71136	44
James A. Culberson, Rt. 2 Box 195-FF, Alexander, AR 72202	58
James C. Thompson, Rt. 2 Box 266 E, Alexander, AR 72202	24
J. O. Goff Plumbing, 4228 East 43rd St., North Little Rock, AR 72117	152
J. C. Penney Co., P.O. Box 2405, 9th Floor, Dallas, TX 75221	890
J. K. Hill, P.O. Box 398, Ringgold, LA 71068	29
Jones Rigging, P.O. Box 3269, North Little Rock, AR 72103	270
J. S. Robinson, P.O. Box 59, Bethany, LA 71007	509
Kennedy Sheet Metal, P.O. Box 6070 Sherwood Sta., North Little Rock, AR 72116	46
King & Pilgram, P.O. Box 679, Pittsburg, TX	317
La. Dept. of Highways, P.O. Box 38, Shreveport, LA 71161	27
L. O. Culverhouse, Route 1 Box 5, Sibley, LA 71073	436
Lester Burst Nursey, 7820 Cantrell Road, Little Rock, AR 72207	16
Libbey Glass Co., P.O. Box 30012, Shreveport, LA 71130	112
Lipton Oil Co., 200 South Martin, Warren, AR 71671	126
Little Rock Asphalt, 3821 Mablevale Pike, Little Rock, AR 72202	425
Little Rock Crate & Basket, 1623 East 14th St., Little Rock, AR 72202	15
L-L-L-L Construction Co., 1057 Kent Rd., Shreveport, LA 71107	48
Loy S. Hathaway, Boles Route, Waldron, AR 72958	96
Luekers Wholesale Oil, P.O. Box 384, Waskom, TX 75692	738
Lund Oxygen Co., P.O. Box 3725, Shreveport, LA 71103	17
M & M Motor Co. Auto Service, 4731 N. Lakeshore Drive, Shreveport, LA 71103	24
M & S Lumber Co., 208 S. Bell, Ozark, AR 72949	270
Machen Construction, P.O. Box 6116, South Station, Little Rock, AR 72206	678
Marion Young Rental, 6 Holly Hill, Little Rock, AR 72204	57
Martin & Son, P.O. Box 42, Winnsboro, TX 75494	736
Matson Construction Co., P.O. Box 2557, Little Rock, AR 72203	182
Matthews Oil Co., Inc., P.O. Box 4045, Shreveport, LA 71104	117
May Oil Co., Route 1 Box 84, North Little Rock, AR 72217	231
Mechanical Services, Route 3 Box 1510, Plain Dealing, LA 71064	393
Medlock Produce Co., Route 1, Von Buren, AR 72958	708
M. E. Easley, Route 2, Plain Dealing, LA 71064	24
Methodist Children's Home, P.O. Box 4125, Little Rock, AR 72214	22
Metro Waste Co., P.O. Box 9156, Little Rock, AR 72219	151
Midwest Casting Corp., P.O. Box 206, Mabelvale, AR 72103	30
Miller Drilling Co., Route 5 Box 450, Fort Smith, AR 72901	102
Mitchell Machinery, P.O. Box 15248, Little Rock, AR 72231	38
Mobil Oil Corp., P.O. Box W, Ada, OK 74820	40
Moody Equipment Co., P.O. Box 334, Little Rock, AR 72203	192
Murphy Oil USA, Inc., 200 Peach Street, Eldorado, AR 71730	309
NUR Soft Water Inc., 131 Military Road, North Little Rock, AR 72115	84
North Little Rock Water Dept., P.O. Box 796, North Little Rock, AR 72115	35
Norwell Equipment, P.O. Box 37210, Shreveport, LA 71103	33
Parker Solvents Co., P.O. Box 271, Fort Smith, AR 72902	75
P. E. Burton, Route 3 Box 994, Minden, LA 71055	23
Pentzien, Inc., Frazier Pke., Little Rock, AR	430
Percy Mingo, 4109 Hollywood Ave., Shreveport, LA 71109	399
Perkins Automatic Sprinkler Co., 1021 Jessie Rd., Little Rock, AR	136
Petroleum Distributing Co., P.O. Box 203, Houston, TX 77001	493
Petroleum Sales Co., Inc., 817 West First St., Bossier City, LA 71010	783
Pickens-Bond Construction, Gazette Building, Little Rock, AR 72201	144
P. M. Oil Co., P.O. Box 639, Prescott, AR 71857	639
Porky Davis General Tire, P.O. Box 1147, Little Rock, AR 72203	94
Pulaski Academy, 12701 Hinson Road, Little Rock, AR 72207	80
Pulaski Country Arkansas, Thirty Second & Brown St., Little Rock, AR 72205	30
Ralph A. Hill, 200 Hill Road, Bryant, AR 72022	33
Razorback Ready Mix, 6421 New Benton Hwy., Little Rock, AR 72204	391
Richards Cycle Shop, 6600 South University, Little Rock, AR 72204	37
Richards Machinery & Supply Co., 5400 Interstate, Shreveport, LA 71103	23
Rushing & Mason Equipment Co., Inc., 7675 West 70th St., Shreveport, LA 71129	33
SAIA Motor Freight Line, Inc., P.O. Box 7643, Shreveport, LA 71137-7643	534
Saunders Leasing Systems, Inc., 1860 King's Hwy., Shreveport, LA 71103	5,769
Savacool & Roberts, Rt. 4 Box 134, Minden, LA 71055	285
Scott Plumbing Co., 1604 Splawn, North Little Rock, AR 72116	58
Sebastian County Road Dept., P.O. Box 368, Greenwood, AR 72936	463
Service Truck Lines, Inc., P.O. Box 3904, Shreveport, LA 71103	36
Shreveport Oil Co., P.O. Box 8432, Shreveport, LA 71108	2,071
Shreveport Packing Co., 1801 Kings Hwy., Shreveport, LA 71103	16
Smith Chevrolet-Cadillac, P.O. Box 3069, Fort Smith, AR 72913	215
Smith Oil & Tire Co., P.O. Box 7905, Shreveport, LA 71107	935
Southland Corp., P.O. Box 4008, Shreveport, LA 71104	206
Springer Painting Co., P.O. Box 4128, Little Rock, AR 72214	35
Stephens, Inc., P.O. Box 5911, Shreveport, LA 71105	18
Stephen's Production Co., Box 2407, Forth Smith, AR 72903	1,801
T.A.W., Inc., P.O. Box 761, Lindsay, OK 73052	71
T. B. Mercer Trucking Co., P.O. Box 1809, Fort Worth, TX 76101	27
The Texas & Pacific Ry. Co., 712 Missouri Pacific Bldg., St. Louis, Missouri 63103	21
Thompson-Hayward Chemical Co., 3100 West 65th, Little Rock, AR 72206	93
Tiger Mart, Inc., P.O. Box 76, Keithville, LA 71047	549
T. J. Myers Excavating, 16301 Raines Road, Little Rock, AR 72210	81
T. J. Smith Box Co., P.O. Box 1643, Fort Smith, AR 72902	25
Toll Manufacturing, 7400 West 12th St. Lower Level, Little Rock, AR 72204	146
Tom Jones Construction, No. 1 Circle Drive, Benton, AR 72015	39
TPI City Construction, 3001 East 83rd St., Kansas City, MO 64132	692
Twin City Ready Mix, P.O. Box 9829, Little Rock, AR 72219	233
United Fence Co., P.O. Box 4161, Fort Smith, AR 72901	106
Waskom Oil Co., P.O. Box 146, Waskom, TX 75692	1,463
Welders Supply Co., 800 E. Roosevelt Rd., Little Rock, AR	221
Wheeling Pipeline, Inc., Industrial Loop, Shreveport, LA 71107	128
Wilbanks Co., Inc., P.O. Box 5417, Bossier City, LA 71111	41
Wilkerson Diesel Service, P.O. Box 219, North Little Rock, AR 72115	115
Woodline, Inc., P.O. Box 1047, Russellville, AR 72801	46
W. R. Stephens Farm, 114 East Capitol, Little Rock, AR 72201	69
W. R. Wrape Stains Co., P.O. Box 182, Little Rock, AR 72203	29
Bill Adamson	22
Brooks Oil Co	141
Cathey's Fina Service	51
C.L. Brixie	26
Crop Service Co	30
Felton Oil Co	1,272
Fleetline, Inc	59
Foster Oil Co	319
Gass Service Co	201
Glen Valt	59
Hazen Oil Co., Inc	19
Herman Douglas	176
J.I. Spainhour	324
Lee Phillips	34
Leo Mathis Co	24
Little Rock Airmative, Inc	37
McFarlands Welding Service	148
Mid. South Utility Contractor	72
M. L. Persons	231
Monard Harrison	2,828
Ozark Material Co	194
Paige Oil Co	98
Pic-Walsh Freight Co	188
Pilgrim Inc	82
Rison Butane Co	207
R.L. Johnson	250
Roberds & Merrill	60
Robert M. Goff Co	28
Surface Combustion	68
TGW Developers	179
Tom Burgess	29
Troy Burns	47
U.S. Plywood Co	56
W. D. Sanacool	84
Customers with potential refund claims of less than $15 (146)	[2] 532
Unidentified customers of company-owned service stations (see fn. 6)	371

[1] Rounded to the nearest dollar.

[2] In the absence of other evidence, these customers would not be eligible for refunds under the procedures proposed in the attached Proposed Decision because their potential refund claims are below the minimum refund amount of $15.

Appendix B—Eugene Endicott, P.O. Box 386, Redmond, OR

Consent Order Period: Nov. 1, 1973 to Nov. 30, 1975.

Products Covered: Motor gasoline, aviation gasoline.

Consent Order Amount: $10,000.

Identified customers	Potential refund [1]
John Hull, 8572 W. Antler, Redmond, OR 97756	$2,090
Ronald Halsey, 668 E. 1st Street, Prineville, OR 97754	1,960
Lawrence Loar, P.O. Box 1, Camp Sherman, OR 9732-0001	190
Butler Aircraft, Roberts Field, Redmond, OR 97755	810
Tasco, Inc., 606 110 Ave. N.E., Suite 315, Bellevue, WA 98004	4,930

[1] Rounded to the nearest dollar

Appendix C—Field Oil Company, 136 W. Rushton Street, Ogden, UT 84401

Consent Order Period: Mar. 1, 1979 to July 31, 1979.

Products Covered: Motor gasoline.

Consent Order Amount: $17,955.15 to reseller customers, $4,772.41 to end-user customers (*see* footnote 6).[1]

Identified reseller customers	Potential refund [2]
Amoco Freeway, 3185 Harrisons Blvd., Ogden, UT 84403	$2,518.80
Big Verns, 345 N. Main, Clearfield, UT 84015	110.14
Bill's American Service, 5808 S. 1900 W., Roy, UT 84067	1,636.09
Ed Blair Service, 2991 Monroe Blvd., Ogden, UT 84401	443.19

Identified reseller customers	Potential refund [2]
Crabtree Auto Company, 705 W. Riverdale, Ogden, UT 84403	29.44
Walt Devore's Service, 133 N. Main, Clearfield, UT 84015	2,225.81
Harry Duckworth, 155 S. 300 E., Kaysville, UT 84015	219.26
Farr Better Service, P.O. Box 1167, Ogden, UT 84402	872.53
Delbert Jensen, 4525 S. 300 W., Ogden, UT 84403	789.80
Kar Kwik #1, 2784 Jefferson Ave., Ogden, UT 84403	27.19
Airs' Rent-a-Car, 123 22nd Street, Ogden, UT 84401	20.85
Mini Mart, 1453 Washington Blvd., Ogden, UT 84401	1,954.82
Nebeker Oil, 1662 Washington Blvd., Ogden, UT 84401	36.03
Bill Olson, 2301 S. Main, Bountiful, UT 84010	1,341.41
Woody Pendleton, 3185 Harrison Blvd., Ogden, UT 84403	1,018.50
Short Stop, 5598 Harrison Blvd., Ogden, UT 84403	2,278.16
Stimson's Market, 2784 Jefferson Ave., Ogden, UT 84403	435.52
Vern Stockseth, 5965 S. Woodland Drive, S. Ogden, UT 84403	677.57
M. J. Kunz	618.80
Gordon Truck Service	748.24

[1] Under the terms of the Field Consent Order, the firm agreed to pay $4,781.56 directly to end-users and $18,052.00 to the DOE. In response to a subsequent discovery of several mathematical errors in the audit, an addendum to the Consent Order was executed on July 6, 1981, thereby reducing the cosnent order amounts to $4,772.41 for direct payment to end-users and $17,995.15 for payment to the DOE.

[2] Since the consent order amount constituted a 100% settlement of the alleged overcharges, each potential refund amount represents the total alleged overcharges incurred by the identified customer.

Appendix D—F.O. Fleetcher, Inc., 606 Alexander, Tacoma, WA 98421

Consent Order Period: Nov. 1, 1973 to May 31, 1974.

Products Covered: Motor gasoline, middle distillates.

Consent Order Amount: $131,470.00 to resellers, $3,350.00 to end-users (*See* footnote 6).

Identified reseller customers	Potential refund [1]
Garkie Oil Co., 7005 N. Vincent Ave., Portland, OR 97217	$285
Leo Huber, 12959 S.E. Powell Blvd., Portland, OR 97236	202
Arden & Ed C. Kneppers, 1000 S.E. 82nd Ave., Portland, OR 97266	1,644
R & M Transport, 7321 N.E. 140th Place, Kirkland, WA 98033	37
Pennco Oil Co., 1919 W. 39th St., Vancouver, WA 98660	716
H. C. Sanderson, Route Bigg Jct., Portland, OR 97229	171
John M. Wilson, 1906 N.E. 57th Street, Portland, OR 97213	1,404
Franko Oil Co., P.O. Box 2440, Eugene, OR 97402	619
Ballard Oil Co., 5300 26th Ave. N.W., Seattle, WA 98108	[2] 9
Blue Line Exchange, P.O. Box 37, Portland, OR 97043	117
Brokers Petroleum, 5100 N.W. 137th Ave., Portland, OR 97229	805
Chappell Oil Co., Rte. 3, Box 4766, St. Helens, OR 97051	1,906
Bob Epley, A-1 Oil Co. 1013 N.E. 62nd Ave., Portland, OR 97213	12,837
McCall Oil Co., 2313 Lloyd Center, Portland, OR 97232	8,975
Morrison Oil Co., P.O. Box 17339, Portland, OR 97217	1,120
Pacific Petroleum, Inc., 1328 S.W. Baseline Rd., Hillsboro, OR 97123	2,939
Powell Distributing Co., P.O. Box 17194 Kenton Station, Portland, OR 97208	533
Redmond Oil Co., 14344 Woodinville-Redmond Road, Redmond, WA 98052	4,073
Joe B. Young, P.O. Box 267, Hood River, OR 97031	83
Robert Wanamaker, P.O. Box 77, Haines, WA 97833	1,174
Vernon Pratt, 1304 East 10th Street, Dallas, OR 97058	197
Triwax Service, 205 Columbia N.E., Salem, OR 97303	2,202
James F. Lemon, P.O. Box 55, Monroe, OR 97546	69
Doubrowsky Logging Co., P.O. Box 191, Coldenvale, WA 99620	180
D. Anderson, 824 State Street, Olympia, WA 98506	815
Petro Stops Northwest, 302 S. Plummer, Tucson, AZ 85719	165
Savway, 95 S.W. First Ave., Ontario, OR 97914	1,299
Schroeder Fuel Co., 1593 Wenachee Ave., Wenachee, WA 98801	1,763
Duncan Service Station, 10656 Pacific Avenue, Tacoma, WA 98444	249
Lukenbill Service Station, 5535 McKinley, Tacoma, WA 98404	240
Ripley Service Station, 941 Meridan, Puyallup, WA 98371	475
Brannon Service Station, 401 Valley, Puyallup, WA 98371	190
Lilyblad Petroleum, 2244 Port of Tacoma Road, P.O. Box 1381 Tacoma, WA 98401	8,750
Marlen L. Knutson, P.O. Box 318, Stanwood, WA 98292	742
Chet & Jack Potter, 1601 E. 27th, Tacoma, WA 98421	806
Able Oil Co., P.O. Box 103, Aberdeen, WA 98520	2,662
Pedersen Oil Co., 1702 Penn Ave., Bremerton, WA 98310	1,318
Norm Drew, P.O. Box 2014, Olympia, WA 09501	124
Gene Morris Fuel Co., Box 71, Route 1, Glenoma, WA 98336	1,416
Port Orchard Oil Co., P.O. Box 140, Port Orchard, WA 98366	1,353
City Fuel, 1912, Wilkerson, Tacoma, WA 98405	304
Northwest Petroleum, 250 E. D Street, Tacoma, WA 98405	52
Gene Peters, Caribou Four, Glenoma, WA 98336	1,225
Harvey, DeWitt, 9605 14th South, Seattle, WA 98108	531
Elton Newman, 1105 Lynhurstway, San Jose, CA 95118	1,013
Ray Ridgeway, 3457 15th West, Seattle, WA 98119	2,896
Lee Clayton, 9605 14th South, Seattle, WA 98108	36
Leonard L. Anderson, Anderson Heating, 1098 N.W. Innis Arden Dr., Seattle, WA 98177	38
Cecil Armstrong, Cunningham Fuel, 4459 S. Hudson, Seattle, WA 98118	40
Best Fire Oil Co., 7624 S.E. 24th, Mercer Island, WA 98040	41
Charles Forsberg, 2024 N.W. 190th, Seattle, WA 98177	221
J. Klietsch, Burien Fuel, 14260 Des Moines Hwy., Seattle, WA 98168	1,345
Bob Landon, Landon Fuel, 16068 Ambaum Blvd. So., Seattle, WA 98148	18
Art Stokke, Williams Heating Oil, 2008 N.W. 56th, Seattle, WA 98107	112
Suburban Fuel, 15055 Des Moines Way, Seattle, WA 98148	62
J. Wasilousky, Fireside Fuel, 3515 N.E. 96th, Seattle, WA 98115	28
Ken Wise, West Fuel Co., 4455 35th St. S.W., Seattle, WA 98126	534
Tom Danforth, Thrifty Oil Heat, Box 2646, Everett, WA 98200	439
J. Pardonavion, Paddy's Fuel, 6311 Rockefeller, Everett, WA 98200	490
Emmet Kramer, Freeland Oil Sales, Langley, WA 98260	[2] 11
L. DeYoung Oil Co., P.O. Box 227, Woodinville, WA 98072	215
A. Jaskari, Sea Rac Oil, 1102 S. 166th Place, Seattle, WA 98148	146
Salmon Bay Oil, 206 Administration Bldg., Fisherman's Terminal, Seattle, WA 98104	307
Sound Oil, 6346 Rainier Ave., Seattle, WA 98118	318
Tom's Fuel, 3601 Second Ave., N.E., Seattle, WA 98105	97
J. Clemonts, 402 Third Ave., South, Twin Falls, ID 83301	1,077
C. W. Douds, Boise, ID 83702	[2] 8
Lynch Oil Co., 535 West Main, Box 790, Burley, ID 83318	4,648
Johnson Oil, State Street, Boise, ID 83702	170
Meyers Oil Co., 1310 State Street, Boise, ID 83702	100
Blue & White, 914 Royal Blvd., Boise, ID 83706	11,915
Franklin Oil Co., P.O. Box 176, Caldwel, ID 83605	7,523
Fred West, P.O. Box 7467, Boise, ID 83707	375
J. A. Trimble Oil, 1424 Second Ave., South, Nampa, ID 83651	3,169
C. B. Oil, 1010 First Street, Nampa, ID 93651	5,989
A. J. Miller, 352 Oak Circle Drive, Boise, ID 83702	840
Jackson Oil, P.O. Box 35, Homedale, ID 83628	1,129
Farmer Oil Co., 301 S. 24th, Boise, ID 83706	35
Veryl Smith, P.O. Box 818, Lagrande, WA 98348	1,381
Milton Schofield, 419 S. Main, Freewater, OR 97862	220
James Simmons, P.O. Box 488, Long Creek, OR 97856	1,045
Joe Young, P.O. Box 267, Hood River, OR 97031	22
C. Buck, Consumer Corner, Umatilla, OR 97882	66
Savway, 471 North Curtis Road, Boise, ID 83706	457
F. L. Bunds, 3641 S.E. 154th, Portland, OR 97213	31
Marvin McKelvie, 1103 N.W. 49th St., Vancouver, WA 98663	96
D. B. Pruett, 2357 S.E. 50th Ave., Portland, OR 97215	138
E. G. Smith, 3107 S.E. 90th Place, Portland, OR 97213	21
Darr Oil Co., Inc., P.O. Box 603, Albany, OR 97321	4,970
D. Fraser, 6825 Highway 99, Vancouver, WA 98665	222
J. D. Johnson & Co., P.O. Box 276, Hood River, OR 97301	1,617
Skillern Oil Co., 50 Highway 99 North, Eugene, OR 97402	663
Redmond Oil Co., P.O. Box 670, Bend, OR 97701	1,258
Roger Maltait, Rte. 2, Box 282-M, Washousia, WA 98671	1,138
Peter Willden, 10587 S.E. 82nd Ave., Portland, OR 97266	1,544
Longview Staples, 965 15th Ave., Longview, WA 98632	2,039
Eugene Nichols, 205 Columbia N.E., Salem, OR 97303	1,822
Killingsworth Boomtown, 5020 N. Interstate Ave., Portland, OR 97266	28
Mustang, 19105 S.E. Yamhill, P.O. Box 16211, Portland, OR 97233	412
Valley Willamette, 1995 Commercial St., Salem, OR 97303	[2] 4
Unlocated End-Users	[3] 640

[1] Rounded to the nearest dollar.

[2] In the absence of other evidence, these customers would not be eligible for refunds under the procedures proposed in the attached Decision because their potential refund claims are below the minimum refund amount of $15.

[3] This amount was deposited in the DOE escrow account after Fletcher was unable to locate several end-users who were eligible for direct refunds under the terms of the Fletcher Consent Order. We porpose that any end-users listed in Schedule A of the Consent Order who certify that they did not receive a direct refund from Fletcher be eligible for a refund in the persent proceeding. We will base their refunds on the amount they would have received under the terms of the Consent Order if Fletcher had initially been able to locate them.

Appendix E—Glaser Gas, Inc., P.O. Box 38, Calhan, CO 80808

Consent Order Period: Nov. 1, 1973 to Feb. 29, 1976.

Products Covered: Propane.

Consent Order Amount: $23,155.37 to resellers, $31,655.36 to end-users (*see* footnote 6).

Identified reseller customers	Potential refund [1]
Red Tag Gas, 215 Auburn Drive, Colorado Springs, CO 80906	$15,262
Kiowa Store, c/o Steve Hemck, Kiowa, CO 80117	6,414
Arkansas Valley Coop Assoc., 302 N. Main St., La Junta, CO 81050	93

Identified reseller customers	Potential refund [1]
Henderson Propane Co., Box 52, Simla, CO 80835	1,297

[1] Rounded to the nearest dollar.

Appendix F—Ideal Gas, Inc., 901 King Avenue, Nyssa, OR 97913

Consent Order Period: Nov. 1, 1973 to Apr. 30, 1974

Products Covered: Propane.

Consent Order Amount: $53,714.00 to resellers, $18,328.00 to end-users (*see* footnote 6).

Identified reseller customers	Potential refund [1]
American Propane, 122 W. Avenue, Caldwell, ID 83605	$283
Economy Gas, P.O. Box 561, Litchfield, MN 55355	5,366
Burns Propane Gas, 1310 Hines Blvd., Burns, OR 97720	1,209
Domestic Industrial Gas, 6806 Northeast Highway 99, Vancouver, WA 98665	32,878
T & T Gas, P.O. Box 45, Conway, KS 67434	3,976
Petrolane Northwest, 455 E. 4 S. Suite 404, Salt Lake City, UT 84111	10,002

[1] Rounded to the nearest dollar.

Appendix G—Inland U.S.A., Inc., 305 Kimberly Building, 2510 South Brentwood, St. Louis, MO 63144

Consent Order Period: Mar. 1, 1979 to Aug. 30, 1979.

Products Covered: Motor Gasoline.

Consent Order Amount: $485,000.[1]

Identified customers	Potential refund [2]
Midwest Petroleum Co., 6760 Southwest Ave., St. Louis, MO 63143	$52,040
Gold Oil Co., 701 Sherman Rd., Belleville, IL 62221	4,271
Laws Enterprises (Bi-Rite) 2110 Chouteau, St. Louis, Mo 63103	9,789
Steveking Co., Inc., 12960 Gravois Rd., St. Louis, MO 63217	12,916
Knapp Oil Co., P.O. Drawer 2, Xenia, IL 62899	7,274
Hutchinson Farms, Rt. 2, Charleston, MO 63834	21
Resilool Packing Co., P.O. Box 689, Union City, TN 38261	137
Gas Mart Oil Co., 2745 E. Skelly Drive, Suite 101, Tulsa, OK 74105	999
Pemiscott Oil Co., 109 East 10th St., Caruthersville, MO 63830	588
Energy Petroleum Co., 2130 Kienlen, St. Louis, MO 63121	2,171
Lieber Service Station, 8227 Gravois St., St. Louis, MO 63123	3,450
City of Fulton, City Hall Bldg., Fulton, KY 42041	137
Vickers Oil Co., P.O. Box 2240, Wichita, KS 67201	1,516
UCO Oil Co., 12820 East Whittier Blvd., Whittier, CA 90607	71,444
Aero Gas Co., 3755 Hwy 94 South, St. Charles, MO 63301	993
ALP Oil Company, 13010 Manchester, Des Peres, MO 63131	111
Geco III, P.O. Box 12731, Creve Coeur, MO 63141	2,346
Ray Oil Co., 12981 Gravois Rd., St. Louis, MO 63127	1,169
Dalton Petroleum, P.O. Drawer Y, Hayti, MO 63851	792
Kenneth Yount, Box 6705, Brentwood, MO 63144	132
Kellett Oil Co., P.O. Box 889, Hwy 615, Sikeston, MO 63801	438
Wolf Oil Company, Highway 24 W, Box 574, Moberly, MO 65270	845
Don Williams, Rt. 3, Charleston, MO 63834	21
Robert Brace Service, Wellsville, MO 63384	227
C. J. Coddington, 1727 West 50th, O'Fallon, IL 62269	291
Onyx Corp., 11345 Olive St. Road, Creve Coeur, MO 63141	21,923
Ronnie Nixon, R.R. #1, Mineral Point, MO 63141	687
Key & Sons Oil Company, Highway AT, Villa Ridge, MO 63089	650
Billy J. Lawson, Frankclay, MO 63644	180
Clyde Nixon, Highway 21 East, Potosi, MO 63364	180
Len Thoele Service, 1703 N. Fourth St., St. Charles, MO 63301	1,278
C. C. Dillon Oil Co., 1342 Lonedell Road, Arnold, MO 63010	8,220
McCollum Service Station, Vandalia, MO 63382	375
Texas Discount Gas Co., P.O. Box 248, Arnold, MO 63010	7,819
Wides Oil Co., Murphysboro, IL 62966	851
Fred Chevrolet, 7700 Manchester Road, St. Louis, MO 63143	26
Manchester Leasing, 1075 S. Brentwood Blvd., St. Louis, MO 63117	21
Raymond Cornwell, 401 E. Main St., E. Prairie, MO 63845	1,405
Star Service, 156 Progress Parkway, Maryland Heights, MO 63043	7,100
Charles Browder Marine, P.O. Box 623, Fulton, KY 42041	1,331
John Watson, North Blanche, Mounds, IL 62964	481
Saveway Oil Co., P.O. Box 339, Cape Girardeau, MO 63701	718
Site Oil Company, 7755 Carondelet, St. Louis, MO 63105	41,438
Flash Oil Corporation, 7755 Carondelet, St. Louis, MO 63105	114,133
Unidentified customers of company-owned service stations (see fn. 9)	145,275

[1] Inland actually paid $528,273.24 into the DOE escrow account, as a result of interest which had accrued up to the date of payment. Accordingly, each of the potential refund amounts listed in this Appendix includes a prorated share of this interest.

[2] Rounded to the nearest dollar.

[FR Doc. 85-8901 Filed 4-11-85; 8:45 am]

BILLING CODE 6450-01-M

Implementation of Special Refund Procedures

AGENCY: Office of Hearings and Appeals, Department of Energy.

ACTION: Notice of Implementation of Special Refund Procedures and Solicitation of Comments.

SUMMARY: The Office of Hearings and Appeals of the Department of Energy solicits comments concerning the appropriate procedures to be followed in refunding $1.9 million in consent order and remedial order funds to members of the public. This money is being held in escrow following the settlement of enforcement proceedings involving Brownlie, Wallace, Armstrong & Bander, Inc.; Cordele Operating Company; and H. H. Gungoll & Associates.

DATE AND ADDRESS: Comments must be filed within 30 days of publication of this notice in the **Federal Register** and should be addressed to the Office of Hearings and Appeals, Department of Energy, 1000 Independence Avenue, S.W., Washington, D.C. 20585. All comments should conspicuously display a reference to case numbers HEF-0564, HEF-0565 and HEF-0572.

FOR FURTHER INFORMATION CONTACT: Thomas O. Mann, Deputy Director, Office of Hearings and Appeals, 1000 Independence Avenue SW., Washington, D.C. 20585, (202) 252-2094.

SUPPLEMENTARY INFORMATION: In accordance with § 205.282(b) of the procedural regulations of the Department of Energy, 10 CFR 205.282(b), notice is hereby given of the issuance of the Proposed Decision and Order set out below. The Proposed Decision relates to consent orders entered into by Brownlie, Wallace, Armstrong & Bander, Inc. (BWAB) on August 28, 1984 and Cordele Operating Company on May 31, 1984. Those consent orders settled all disputes between the firms and DOE concerning possible violations of DOE price regulations with respect to BWAB's sales of crude oil during the period January 1, 1979 through January 27, 1981 and Cordele's sales of crude oil during the entire period of federal price controls. In additon, the Proposed Decision concerns funds obtained in connection with the issuance of a Remedial Order to H. H. Gungoll & Associates on April 5, 1984 which determined that the firm overcharged purchasers of crude oil produced from its Ven Deventer Quarter property during the period January 1, 1975 through December 31, 1976.

The Proposed Decison sets forth the procedures and standards that the DOE has tentatively formulated to distribute the contents of an escrow account funded by the firms pursuant to the consent orders and the remedial order. The DOE has tentatively established procedures under which purchasers of BWAB, Cordele, or Gungoll crude oil during the audit period may file claims for refunds from the escrow fund. Applications for Refund should *not* be filed at this time. Appropriate public notice will be given when the submission of claims is authorized.

Any member of the public may submit written comments regarding the proposed refund procedures. Commenting parties are requested to submit two copies of their comments. Comments should be submitted within 30 days of publication of this notice in the **Federal Register**, and should be sent to the address set forth at the beginning of this notice. All comments received in this proceeding will be available for public inspection between the hours of

1:00 to 5:00 p.m., Monday through Friday, except federal holidays, in the Public Docket Room of the Office of Hearings and Appeals, located in Room 1E-234, 1000 Independence Avenue, S.W., Washington, D.C. 20585.

Dated: April 4, 1985.

George B. Breznay,

Director, Office of Hearings and Appeals.

April 4, 1985.

Proposed Decision and Order of the Department of Energy

Implementation of Special Refund Procedures

Names of Firms: Brownlie, Wallace, Armstrong & Bander, Inc.; Cordele Operating Company; and H. H. Gungoll & Associates.

Dates of Filing: February 26, 1985; February 26, 1985; and March 18, 1985.

Case Numbers: HEF-0564; HEF-0565; and HEF-0572.

Under the procedural regulations of the Department of Energy, the Economic Regulatory Administration (ERA) may request that the Office of Harings and Appeals (OHA) formulate and implement a specially-designed process to distribute funds received as a result of an enforcement proceeding in order to remedy the effects of alleged or actual violations of DOE regulations. 10 CFR Part 205, Subpart V. In accordance with these regulatory provisions, the ERA filed Petitions for the Implementation of Special Refund Procedures in connection with remedial orders or consent orders involving Brownlie, Wallace, Armstrong & Bander, Inc. (BWAB) and the other firms listed above. Pursuant to these orders, the firms were either equired or agreed to make refunds totaling approximately $1,912,000 for actual violations or to settle alleged violations of the DOE pricing regulations. Those funds, at least some portion of which have already been paid to the DOE, are being held in an escrow account under the jurisdiction of the DOE pending receipt of instructions from the OHA regarding their final distribution. These cases have been consolidated for purposes of this decision because each involves actual or alleged crude oil pricing or certification violations. In addition, the issues concerning the identification of injured parties are similar in each case.

I. Regulatory Background

The parties in each of these cases were subject to the Mandatory Petroleum Price Regulations set forth in 6 CFR Part 150 and 10 CFR Part 212. DOE and its predecessor agencies conducted audits of these firms and the investigations revealed actual or alleged violations of the Mandatory Petroleum Price Regulations with respect to the sale of crude oil.

Those regulations generally required crude oil producers to determine the first sale price of crude oil on the basis of the level of production from a property during a specified base period, *i.e.*, the base production control level (BPCL). *See* 6 CFR 150.354; 10 CFR 212.72-74. The term "property" was defined as the right to produce crude oil which arises from a lease or fee interest. 6 CFR 150.354(b)(2); 10 CFR 212.72. Crude oil production that did not exceed the BPCL for a particular property was generally subject to the lower tier ("old" oil) ceiling price rule. 6 CFR 150.354; 10 CFR 212.73. Crude oil production that exceeded the BPCL ("new" oil) could generally be sold without regard to the ceiling price rule prior to February 1, 1976, and at the upper tier ceiling price level after that date. 6 CFR 150.354(c)(2); 10 CFR 212.74(a). Prior to February 1, 1976, in months in which new oil could be sold from a property, additional volumes of crude oil could be sold as "released" oil at prices in excess of the applicable lower tier ceiling price level. 6 CFR 150.354(c)(3); 10 CFR 212.74(b). Additionally, crude oil produced from a "stripper well property" could generally be sold at market price levels. Producers and resellers of crude oil were generally required to certify in writing to each purchaser in the distribution chain the respective volumes of the various categories of price-controlled domestic crude oil included in each purchase. 10 CFR 212.131 (a)(4), (b)(1). Refiners were required to report these certifications to the DOE and its predecessors when they processed the crude oil to enable the agency to administer the Entitlements Program, 10 CFR 211.67.

The Entitlements Program, 10 CFR 211.67, was part of the comprehensive program administered by the DOE for the mandatory pricing and allocation of crude oil, residual fuel oil and refined petroleum products. As discussed above, the federal regulations governing the price of crude oil created a price disparity between, on the one hand, foreign crude and uncontrolled domestic crude oil, and old and upper-tier (price-controlled) oil on the other hand. These price controls had an unequal effect on refiners and their downstream customers because some refiners had greater access to the cheap old oil than others. Firms which had little or no access to price-controlled oil were forced to purchase uncontrolled domestic or similarly expensive foreign crude oil. As a result, many small, independent firms, with little or no access to price-controlled domestic reserves, experienced crude oil acquisition costs so high relative to the industry as a whole that those costs threatened their viability. To remedy these imbalances, the DOE established the Entitlements Program. 39 FR 31650 (1974); 39 FR 39740 (1974). Under the Entitlements Program, refiners with proportionally greater access to cheap price-controlled oil made cash payments, in the form of the purchase of entitlements, to refiners with less access to price-controlled oil. The program was designed to restore the competitive viability of the refining industry by generally equalizing among all domestic refiners the benefits associated with access to the lower-priced domestic crude oil.

II. Factual Background

The actual or alleged violations generally involved in cases concerning producers of crude oil fall into two general categories. The first type of alleged violation involves incorrect certifications and the second involves sales of crude oil at prices in excess of the applicable ceiling price for "old" or "new" oil. In the present proceeding, H.H. Gungoll & Associates was found to have incorrectly classified crude oil produced from its Van Deventer Quarter property during the period Janaury 1, 1975 through December 31, 1976 and to have overcharged purchasers by an amount per barrel which represents the difference between the "new" or "stripper well" prices and the maximum price permitted for "old" oil. Cordele Operating Company allegedly sold crude oil at prices in excess of the applicable ceiling price in violation of 10 CFR Part 212, Subpart D and predecessor regulations during the entire period of federal crude oil price controls. Similarly, BWAB was alleged to have improperly priced crude oil produced from its Burlington Northern 11-21 property during the period January 1, 1979 through January 27, 1981.

III. Jurisdiction

The procedural regulations of the Department of Energy set forth general guidelines by which the Office of Hearings and Appeals may formulate and implement a plan of distribution for funds received as a result of an enforcement proceeding. 10 CFR Part 205, Subpart V.[1] Those regulations

[1] At one time crude oil and refined petroleum products were subject to a comprehensive price regulation scheme which could be utilized to facilitate the channeling of refunds to overcharged parties including ultimate consumers. However, since the President has exempted crude oil and all

Continued

provide that the Subpart V process may be used in situations where the Department of Energy is unable to identify readily persons who were or may have been injured by alleged or adjudicated violations or where it is unable to readily ascertain the amount of their alleged injuries. 10 CFR 205.280. For a more detailed discussion of Subpart V, *see Office of Enforcement*, 9 DOE ¶ 82,508 (1981); *Office of Enforcement*, 8 DOE ¶ 82,597 (1981). After reviewing the record developed in this proceeding, we have concluded that, although the identity of the first purchasers of the firms' crude oil may be known, it may be difficult to identify other potentially injured parties and to determine to what extent a refund applicant may have been injured by the firm's pricing or certification practices. Under these circumstances, Subpart V provides a useful mechanism for devising a procedure to effect restitution. The Office of Hearings and Appeals therefore will accept jurisdiction over the funds which the three firms paid to the DOE in connection with enforcement proceedings or consent orders underlying the Petitions for Implementation of Special Refund Proceedings.

IV. Proposed Refund Procedures

We have previously established refund procedures for consent orders involving the same type of crude oil-related violations as those which are the subject of the present proceedings. In *Office of Enforcement: In the Matter of Alfred B. Alkek*, 9 DOE ¶82,521 (1982), 47 FR 2196 (January 14, 1982) (hereinafter cited as *Alkek*) and *Office of Enforcement: In the Matter of Adams Resources and Energy, Inc.*, 9 DOE ¶ 82,553 (1982), 47 FR 16381 (April 16, 1982) (hereinafter cited as *Adams*), which involved consent orders and remedial orders with 58 firms, we established a two-stage refund procedure for consent order and remedial order funds received as a result of alleged crude oil regulatory violations.[2] *See also A. Johnson & Co., Inc.*, 12 DOE ¶85,102 (1984), 49 FR 44541 (November 7, 1984) (establishing refund procedures like those in *Alkek* and *Adams* for funds obtained from 194 firms) (hereinafter cited as *A. Johnson*). Because the types of alleged violations that underlie the present proceeding are substantially the same as those that were the subject of the *Alkek*, *Adams*, and *A. Johnson* proceedings, we have determined that it is appropriate to formulate a two-stage refund proceeding modeled after those proceedings. We therefore propose to establish first-stage refund procedures in which we will accept first-stage refund applications to be adjudicated in the same manner and using the same principles as those refund applications that were filed pursuant to the *Alkek*, *Adams*, and *A. Johnson* determinations. Parties who have filed claims in the *Alkek* and *Adams* proceedings, but have not received a decision on those claims, will be deemed to have filed similar applications in this proceeding.

Because of the difficulty inherent in establishing the level of injury to parties in the persent case, there may be a portion of the refund moneys remaining after all successful first-stage claimants have been paid even though three of the consent order firms have paid less into the escrow account than they are obligated to pay. As in previous cases, we shall hold in abeyance our determination as to appropriate second-stage procedures for these cases until we know how much money will remain after first-stage claims are paid. *See Office of Enforcement*, 9 DOE ¶ 82,508 (1982).

It Is Therefore Ordered That:

(1) The refund amount provided in conjunction with the consent order entered into between the Economic Regulatory Administration (ERA) and Brownlie, Wallace, Armstrong & Bander, Inc. on August 28, 1984 shall be distributed in the manner set forth in the foregoing Decision.

(2) The refund amount provided in conjunction with the consent order entered into between the Economic Regulatory Administration (ERA) and Cordele Operating Company on May 31, 1984 shall be distributed in the manner set forth in the foregoing Decision.

(3) The refund amount provided in conjunction with the Remedial Order issued to H.H. Gungoll & Associates on April 5, 1984 shall be distributed in the manner set forth in the foregoing Decision.

[FR Doc. 85-8902 Filed 4-11-85; 8:45 am]

BILLING CODE 6450-01-M

refined petroleum products from the DOE regulatory program, *see* Exec. Order No. 12287, 46 FR 9909 (1981), price rollbacks are no longer an effective means of refunding money to purchasers who were overcharged in the past.

[2] We subsequently added to the Alkek/Adams "pool" the portion of the Amoco consent order funds that was allocated for crude oil claims. *See* Office of Special Counsel, 10 DOE ¶ 85,048 at 88,203. We have also discussed the potential distribution of crude oil overcharge funds in In re Stripper Well Exemption Litigation, Case No. HEF-0025, 48 FR 57608 (1983).

Implementation of Special Refund Procedures

AGENCY: Office of Hearings and Appeals, Energy.

ACTION: Notice of Implementation of Special Refund Procedures.

SUMMARY: The Office of Hearings and Appeals of the Department of Energy announces the procedures for disbursement of $94,797.28 (plus accrued interest) obtained as the result of Consent Orders which the DOE entered into with Collins Oil Company of Aurora, Illinois (Case No. HEF-0051), C.C. Dillon Company of Arnold, Missouri (Case No. HEF-0063), Enterprise Oil and Gas Company of Detroit, Michigan (Case No. HEF-0070, and Foster Oil Company of Richmond, Michigan (Case No. HEF-0075).

DATE AND ADDRESS: Applications for refund of a portion of one of the consent order funds must be postmarked within 90 days of publication of this notice in the **Federal Register** and should be addressed to: Collins Consent Order Refund Proceeding, Dillon Consent Order Refund Proceeding, Enterprise Consent Order Refund Proceeding, or Foster Consent Order Refund Proceeding, Office of Hearings and Appeals, Department of Energy, 1000 Independence Avenue, SW., Washington, DC. 20585. All applications should conspicuously display a reference to the appropriate case number.

FOR FURTHER INFORMATION CONTACT: Richard W. Dugan, Associate Director, Office of Hearings and Appeals, 1000 Independence Avenue, SW., Washington, DC. 20585 (202) 252-2860.

SUPPLEMENTARY INFORMATION: In accordance with § 205.282(c) of the procedural regulations of the Department of Energy, 10 CFR 205.282(c), notice is hereby given of the issuance of the Decision and Order set out below. The Decision and Order relates to Consent Orders entered into by the following parties: Collins Oil Company of Aurora, Illinois; C.C. Dillon Company of Arnold, Missouri; Enterprise Oil and Gas Company of Detroit, Michigan; and Foster Oil Company of Richmond, Michigan (hereinafter collectively referred to as the consent order firms). These Consent Orders settled possible pricing and allocation violations with respect to the consent order firms' sales of refined petroleum products during the relevant consent order periods. Under the terms of these Consent Orders, the following amounts have been remitted to the DOE: $12,000 by Collins; $48,788.23 by Dillon;

$24,512.05 by Enterprise; and $9,497 by Foster. These amounts are being held in separate interest-bearing escrow accounts pending determination of their proper distribution.

The Office of Hearings and Appeals previously issued a Proposed Decision and Order which tentatively established a two-stage refund procedure and solicited comments form interested parties concerning the proper disposition of the four consent order funds. The Proposed Decision and Order discussing the distribution of the consent order funds was issued on January 11, 1985. 50 FR 4582 (January 31, 1985).

As the Decision and Order indicates, applications for refunds from the consent order funds may now be filed. Applications will be accepted provided they are postmarked no later than 90 days after publication of this Decision and Order in the **Federal Register.**

Applications will be accepted from customers who purchased refined petroleum products from one of the consent order firms during the relevant consent order period. The specific information required in an application for refund is set forth in the Decision and Order. The Decision and Order reserves the question of the proper distribution of any remaining consent order funds until the first-stage claims procedure is completed.

Dated: April 3, 1985.

George B. Breznay,

Director, Office of Hearings and Appeals.

April 3, 1985.

Decision and Order of the Department of Energy

Special Refund Procedures

Names of Firms: Collins Oil Company; C.C. Dillon Company; Enterprise Oil and Gas Company; and Foster Oil Company.

Date of Filing: October 13, 1983.

Case Numbers: HEF-0051; HEF-0063; HEF-0070; and HEF-0075.

In accordance with the procedural regulations of the Department of Energy (DOE), 10 CFR Part 205, Subpart V, the Economic Regulatory Administration (ERA) of the DOE filed a Petition for the Implementation of Special Refund Procedures with the Office of Hearings and Appeals (OHA) on October 13, 1983. The petition requests that the OHA formulate and implement procedures for the distribution of funds received pursuant to Consent Orders entered into by the DOE and the following parties: Collins Oil Company (Collins) of Aurora, Illinois, C.C. Dillon Company (Dillon) of Arnold, Missouri, Enterprise Oil and Gas Company (Enterprise) of Detroit, Michigan, and Foster Oil Company (Foster) of Richmond, Michigan (hereinafter collectively referred to as the consent order firms).

I. Background

Each of the consent order firms is a "reseller-retailer" of "refined petroleum products," as these terms were defined in 10 CFR § 212.31. ERA audits of the consent order firms revealed possible violations of the Mandatory Petroleum Pricing Regulations. Subsequently, each of these firms entered into a separate Consent Order with the DOE in order to settle its disputes concerning certain sales of refined petroleum products. Each Consent Order refers to the ERA's allegations of overcharges, but notes that no findings of violation were made. Additionally, each Consent Order states that the consent order firm does not admit that it committed any such violations.

Pursuant to these Consent Orders, the firms agreed to pay to the DOE specified amounts in settlement of their potential liability regarding sales to their respective customers during the relevant consent order period. The firms' payments are currently being held in separate interest-bearing escrow accounts pending distribution by the DOE. The names and locations of the firms, the settlement amounts, the products covered by the Consent Orders, and the dates of the consent order periods are set forth in Appendices A-D to this Decision and Order.

On January 11, 1985, we issued a Proposed Decision and Order (PD&O) setting forth a tentative plan for the distribution of the consent order funds. 50 FR 4582 (January 31, 1985). We stated in the PD&O that the basic purpose of a special refund proceeding is to make restitution for injuries that were suffered as a result of alleged or adjudicated violations of the DOE regulations. In order to effect restitution in this proceeding, we tentatively determined to rely, in part, on information contained in the ERA audit files. We observed that this approach was warranted based on our experience in prior Subpart V cases where the consent order period is coterminous with the audit period, all or most of the firm's products were identified by the ERA, and alleged overcharge amounts were specified for those customers in the audit records. *See, e.g., Marion Corp.*, 12 DOE ¶ 85,014 (1984). At the same time, we recognized that there may have been other purchasers who were not identified in the audit files and who may have been injured as a result of the pricing practices of one of the consent order firms during the relevant consent order period. We therefore proposed to establish a claims procedure whereby the consent order firms' customers could apply for a refund.

A copy of the PD&O was published in the **Federal Register** on January 31, 1985, and comments were solicited regarding the proposed refund procedures. In addition, a copy of the PD&O was sent to those purchasers whose names and addresses were listed in the ERA audit files, and are set forth in Appendices A-D. Comments were filed on behalf of Osceola Refining Company (Osceola) and the States of Arkansas, Delaware, Kansas, Iowa, Louisiana, North Dakota, Rhode Island, and West Virginia. All of the comments filed by the states discuss the distribution of any residual funds that might remain after refunds have been made to first-stage claimants. The purpose of this Decision and Order is limited to establishing procedures to be used for filing and processing claims in the first stage of the present refund proceeding. This Decision sets forth the information that a purchaser of refined petroleum products from one of the consent order firms should submit in an Application for Refund in order to establish eligibility for a portion of the relevant consent order fund. The formulation of procedures for the final disposition of any remaining funds will necessarily depend on the size of the fund. *See Office of Enforcement*, 9 DOE ¶ 82,508 (1981). Therefore, it would be premature for us to address at this time the issues raised by the states' comments concerning the disposition of any funds remaining after all the meritorious first stage claims have been paid.[1]

II. Jurisdiction

The procedural regulations of the DOE set forth general guidelines by which the OHA may formulate and implement a plan of distribution for funds received as a result of an enforcement proceeding. 10 CFR Part 205, Subpart V. The Subpart V process may be used in situations where the DOE is unable to readily identify persons who may have been injured by alleged or adjudicated violations, or unable to ascertain the amounts of such persons' injuries. For a more detailed discussion of Subpart V and the authority of the OHA to fashion procedures to distribute refunds obtained as part of settlement agreements, *see Office of Enforcement*,

[1] It is not clear, however, that Arkansas, Delaware, Kansas, Iowa, Louisiana, North Dakota, Rhode Island, and West Virginia have a legitimate interest in this proceeding, since none of the sales involved were made in these states.

9 DOE ¶ 82,553 (1982); *Office of Enforcement*, 9 DOE ¶ 82,508 (1981); *Office of Enforcement*, 8 DOE ¶ 82,597 (1981) (hereinafter cited as *Vickers*). We have received no comments challenging our authority to fashion special refund procedures in this case. We will therefore grant the ERA's petition and assume jurisdiction over distribution of the four consent order funds.

III. Determination of Injury and Refund Amounts

In the PD&O, we proposed that retailer and reseller claimants (including refiners acting as resellers) be required to demonstrate that they did not pass on to their customers the price increases implemented by one of the consent order firms. *See, e.g., Vickers*. We also proposed to adopt a presumption of injury with respect to small claims. Specifically, we proposed that a reseller whose refund claim is below a threshold amount of $5,000 not be required to submit any additional evidence of injury beyond purchase volumes.

Osceola, a purchaser of Enterprise petroleum products, filed comments objecting to the requirement that resellers of petroleum products submit proof of injury. Osceola argues that the length of time since the execution of the Enterprise Consent Order and the decontrol of the petroleum industry makes a precise showing of injury nearly impossible. Osceola requests that a presumption of injury be adopted for all claimants, regardless of the nature of their operations or the amount of their refund claims.

We are not persuaded by Osceola's arguments. The purpose of a Subpart V proceeding is to effect restitution for those parties who were injured by the pricing practices of a consent order firm. *See* 10 CFR 205.280. As in prior refund decisions, we find that a proof of injury for firms whose refund claims exceed the $5,000 threshold is neither unfair nor unduly burdensome, given those firms' larger size, their presumably greater sophistication and accounting capabilities, and the DOE's preexisting recordkeeping requirements under 10 CFR 210.92. *See Vickers* at 85,396. It would be contrary to the objectives of the Subpart V regulations to distribute large refunds without requiring a detailed showing of injury by the claimants. Were we to do so, customers who were not affected adversely by the consent order firms' alleged pricing violations could receive substantial refunds, while customers who actually experienced injury might not be compensated at all. We believe that a proof of injury requirement for resellers above the threshold level best accomplishes restitution.[2]

Accordingly, in order to qualify for a refund, resellers of refined petroleum products purchased from one of the consent order firms must show that during the relevant consent order period market conditions would not permit them to increase their prices to pass through the additional costs associated with the alleged overcharges. In addition, resellers must show that they maintained a "bank" of unrecovered costs in order to demonstrate that they did not subsequently recover these costs by increasing their prices.[3] As we noted in the PD&O, however, the maintenance of a bank will not automatically establish injury. *See Tenneco Oil Co./Chevron U.S.A., Inc.*, 10 DOE ¶ 85,014 (1982); *Vickers Energy Corp./Standard Oil Co.*, 10 DOE ¶ 85,036 (1982); *Vickers Energy Corp./Koch Industries, Inc.*, 10 DOE ¶ 85,038 (1982).

As mentioned above, we proposed to adopt a presumption of injury with respect to small claims. Presumptions in refund cases are specifically authorized by applicable DOE procedural regulations. Section 205.282(e) of those regulations states that:

> In establishing standards and procedures for implementing refund distributions, the Office of Hearings and Appeals shall take into account the desirability of distributing the refunds in an efficient, effective and equitable manner and resolving to the maximum extent practicable all outstanding claims. In order to do so, the standards for evaluation of individual claims may be based upon appropriate presumptions.

10 CFR 205.282(e).

The presumption that claimants seeking smaller refunds were injured by the pricing practices settled in the Consent Orders is based on a number of considerations. *See, e.g., Ubon Oil Co.*, 9 DOE ¶ 82,541 (1982). As we have noted in many previous refund decisions, there may be considerable expenses involved in gathering the types of data needed to support a detailed claim of injury. In order to prove such a claim, an applicant must compile and submit detailed factual information regarding the impact of alleged overcharges which took place many years ago. This procedure is generally time-consuming and expensive, and in the case of small claims, the cost to the firm of gathering this factual information, and the cost to the OHA of analyzing it, may be many times the expected refund amount. Failure to allow simplified application procedures for small claims could therefore operate to deprive injured parties of the opportunity to obtain a refund. The use of presumptions is also desirable from an administrative standpoint, because it allows the OHA to process a large number of refund claims quickly and to allocate its limited resources more efficiently. Finally, these smaller claimants did purchase covered products from one of the consent order firms and were in the chain of distribution where the alleged overcharges occurred. Therefore, they bore some impact of the alleged overcharges, at least initially. The presumption eliminates the need for a claimant to submit and the OHA to analyze detailed proof of what happened downstream of that initial impact.

Under the small claims presumption, a reseller or retailer claimant will not be required to submit any additional evidence of injury beyond purchase volumes if its refund claim is based on purchases below a threshold level.[4] Previous OHA refund decisions have expressed the threshold either in terms of a ceiling on purchases from the consent order firm, or as a dollar refund amount. However, in *Texas Oil & Gas Corp.*, 12 DOE ¶ 85,069 (1984), we noted that describing the threshold in terms of a dollar amount rather than a purchase volume figure would better effectuate our goal of facilitating disbursements to

[2] It should be noted that under the procedures we are adopting, Osceola will not be required to make a detailed showing of injury provided that (i) the firm was not a spot purchaser and (ii) the firm reduces its refund claim from $5,022 (*see* Appendix C) to $5,0000. *See* footnotes 4 and 5, *infra*.

[3] Some of the motor gasoline sales covered by the Dillon Consent Order occurred subsequent to the amendment of the retailer price rule that eliminated the bank requirement for retailers. *See* 10 CFR 212.93(a)(2), 44 FR 42542 (July 19, 1979) (effective July 15, 1979). Accordingly, retailers who purchased motor gasoline from Dillon will not be required to submit bank information for those purchases made after July 15, 1979.

[4] Resellers who made only spot purchases from the consent order firms will be presumed to have suffered no injury. They will therefore be ineligible for any refund, even a refund at or below the threshold level. As we have previously stated with respect to spot purchasers:

> [T]hose customers tend to have considerable discretion in where and when to make purchases and would therefore not have made spot market purchases of [the firm's product] at increased prices unless they were able to pass through the full amount of [the firm's] quoted selling price at the time of purchase to their own customers.

Vickers, 8 DOE at 85,396–97; *see also Office of Special Counsel*, 10 DOE ¶ 85,048 at 88,200 (1982). The same rationale holds true in the present case. Accordingly, in order to overcome the rebuttable presumption that they were not injured, in addition to the proof of injury required of those resellers claiming more than the threshold amount, any reseller claimants who were spot purchasers must submit additonal evidence to establish that they were unable to exercise considerable discretion as to where and when they made the purchase(s) on which their refund claim is based.

applicants seeking relatively small refunds. *Id.* at 88,210. In the PD&O, we proposed that the same approach be followed in this case. The adoption of a threshold level below which a claimant is not required to submit any further evidence of injury beyond volumes purchased is based on several factors. As noted above, we are especially concerned that the cost to both the applicant and the government of compiling and analyzing information sufficient to show injury not exceed the amount of the refund to be gained. In this case, where the proposed maximum refund amounts are fairly low and the time periods of the Consent Orders are quite distant, we believe that the establishment of a presumption of injury for all claims of $5,000 or less is reasonable.[5] *See id.; Marion Corp.*, 12 DOE ¶ 85,014 (1984).

In addition to the presumption for small claims, we are making a finding that end-users or ultimate consumers, including businesses that are unrelated to the petroleum industry, were injured by the alleged overcharges settled in the Consent Orders. Unlike regulated firms in the petroleum industry, members of this group generally were not subject to price controls during the consent order period, and they were not required to keep records which justified selling price increases by reference to cost increases. For these reasons, an analysis of the impact of the alleged overcharges on the final prices of non-petroleum goods and services would be beyond the scope of a special refund proceeding. *See Office of Enforcement, Economic Regulatory Administration: In the Matter of PVM Oil Associates, Inc.*, 10 DOE ¶ 85,072 (1983); *see also, Texas Oil & Gas Corp.*, 12 DOE at 88,209 and cases cited therein. We have therefore concluded that end-users of petroleum products purchased from one of the consent order firms need only document their purchase volumes from the consent order firm to make a sufficient showing that they were injured by the alleged overcharges.[6]

[5] As in prior refund cases, resellers whose maximum potential refund exceeds the threshold amount may elect to apply for a refund based on the threshold amount.

[6] The Consent Orders for Dillion, Enterprise, and Foster required each consent order firm to refund a certain amount directly to its end-user customers. The funds in the escrow accounts are thus primarily intended for distribution to the firm's reseller and retailer customers. Accordingly, an end-user of refined petroleum products purchased from Dillon, Enterprise, or Foster will not be eligible for a refund in this proceeding unless it certifies that it did not receive a direct refund from the consent order firm.

IV. Calculation of Refund Amounts

In the PD&O, we proposed that the maximum refund for the firms listed in the Appendices be based on the amount they were allegedly overcharged, as calculated by the ERA. Although we recognize that the ERA audit files do not provide conclusive evidence as to the identity of all allegedly overcharged parties or the amount of money they should receive in a Subpart V proceeding, we believe it is appropriate to use this information in the present case. As we noted in the PD&O, the ERA audits were very narrow in scope, the Consent Orders were limited to the same products and time periods as the audits, and the consent order firms had a relatively small number of customers. Because of these factors, the information contained in the audit files can be used to fashion a refund plan which will correspond closely to the injuries experienced. *See, e.g., Marion.* To calculate the maximum refund for each identified customer listed in the Appendices, we will multiply the alleged overcharge amounts for each eligible claimant by a pro rata factor, determined by dividing the relevant consent order amount by the relevant alleged overcharges.[7] The pro rata factor for each Consent Order and the alleged overcharges and potential refund amount for each identified customer are listed in the Appendices. In addition, successful refund applicants will receive a pro rata share of the interest which has accrued since the deposit of the funds into the escrow accounts.

We will also adopt our proposal to establish a minimum amount of $15 for refund claims. We have found through our experience in prior refund cases that the cost of processing claims in which refunds are sought for amounts less than $15 outweighs the benefits of restitution in those situations. *See, e.g., Uban Oil Co.*, 9 DOE ¶82,541 at 85,225 (1982). *See also* 10 CFR 205.286(b).

V. Application for Refund Procedures

We have determined that the procedures described in the PD&O are the most equitable and efficacious means of distributing the four consent order funds. Accordingly, we shall now accept applications for refunds from the customers listed in the Appendices. We will also accept claims from any customers not listed in the Appendices who can show that they were injured by the pricing practices of one of the consent order firms during the relevant consent order period.

In order to receive a refund, each applicant will be required to report the monthly volume of petroleum products for which it is claiming a refund. The applicant must also state how it used the petroleum products, i.e., whether it was a reseller or an ultimate consumer. Retailers and resellers (including refiners acting as resellers) who request refunds in excess of the $5,000 threshold amount must submit evidence to establish that they did not pass on the alleged overcharges to their customers. In addition, each applicant must state whether there has been a change in ownership of the firm since the relevant audit period and must provide the names and addresses of any other owners. If there has been a change in ownership, the applicant should either state the reasons why the refund should be paid to the applicant rather than the other owners or provide a signed statement from the other owners indicating that they do not claim a refund. Applicants should also report any past or present involvement as a party in DOE enforcement proceedings. If these proceedings have terminated, the applicant should furnish a copy of the final order issued in the matter and indicate the status of any remedial action required by the order. If the proceeding is ongoing, the applicant

[7] In the case of Collins, the ERA audit files do not list alleged overcharges for individual, residential end-users of No. 2 heating oil. *See* Appendix A. Similarly, in the case of Dillon, the ERA audit files do not identify those non-retail customers who purchased unleaded gasoline transported via common carrier (Class II purchasers). *See* Appendix B. As proposed in the PD&O, we will establish a claims procedure whereby these unidentified customers of Collins and Dillon can apply for a refund based on the volume of petroleum products which they purchased from the consent order firm. *See Vickers.* A volumetric factor has been determined in each case by dividing a prorated portion of the amount that the entire class of unidentified customers was allegedly overcharged (as shown in Appendices A and B) by the estimated total volume of petroleum products sold to the class of customers during the relevant consent order period. In each case, this results in a refund amount for each gallon which an applicant purchased from the consent order firm. In the PD&O, we calculated the volumetric factor for Collins residential end-users to be $1.0807 per gallon based upon a total sales volume figure of 5,289.83 gallons. Upon closer examination of the Collins audit file, however, we discovered that the correct sales volume figure for residential end-users of Collins No. 2 heating oil is 582,963 gallons. Accordingly, we have adjusted the volumetric factor for Collins residential end-users to $0.0108 per gallon (($8,789.30 × .6504) divided by 528,963). In the case of Dillon, the volumetric factor for Class II customers is $0.0153 per gallon (($271.42 × .8534) divided by 15,096 gallons). As we stated in the PD&O, the ERA audit files do not specifically list the volumes of unleaded gasoline sold to Class II customers during the consent order period. Accordingly, we have estimated sales volume figures for this class of customers by multiplying the total volume of unleaded gasoline sold by Dillon during the consent order period by the percentage of the total alleged overcharges attributable to this class.

should briefly describe the proceeding and its current status. The applicant is under a continuing obligation to keep the OHA informed of any change in status while its refund application is pending. *See* 10 CFR 205.9(d)

All applications must be filed in duplicate and must be received within 90 days after publication of this Decision and Order in the **Federal Register**. Each application must be in writing, signed by the applicant, and specify that it pertains to either the Collins Consent Order Fund, Case No. HEF-0051, the Dillon Consent Order Fund, Case No. HEF-0063, the Enterprise Consent Order Fund, Case No. HEF-0070, or the Foster Consent Order Fund, Case No. HEF-0075. A copy of each application will be available for public inspection in the Public Docket Room of the Office of Hearings and Appeals. Any applicant who believes that its application contains confidential information must so indicate and submit two additional copies of its application form which the information that the applicant claims is confidential has been deleted. Each application must also include the following statement: "I swear (or affirm) that the information submitted is true and accurate to the best of my knowledge and belief." *See* 10 CFR 205.283(c); 18 U.S.C. 1001. In addition, the applicant should furnish us with the name and telephone number of a person who may be contacted by this Office for additional information concerning the application. All applications should be sent to: Office of Hearings and Appeals, Department of Energy, 100 Independence Ave., S.W., Washington, D.C. 20585.

It is Therefore Ordered That:

(1) Applications for refunds from the consent order funds remitted to the Department of Energy by the consent order firms listed in Appendices A-D to this Decision and Order may now be filed.

(2) All applications must be filed no later than 90 days after publication of this Decision and Order in the **Federal Register**.

Dated: April 3, 1985.

George B. Breznay,

Director, Office of Hearings and Appeals.

Appendix A—Collins Oil Company, 45 Pierce St., Aurora, IL 60505

Consent Order Period: Nov. 1, 1973 to Jan. 31, 1975.

Products Covered: No. 2 Heating Oil.

Consent Order Amount: $12,000.00.

Pro Rata Factor ($12,000.00 divided by $18,450.84): .6504.

Identified customers	Alleged overcharges	Potential refunds [1]
Chi Pre Cast, N. Auror Road, Naperville, IL 60540	$18.17	[2] $12.00
Bristol Grade School, Bristol, IL 60512	315.78	205.00
Georgia Pacific, Franklin Park, IL 60131	2,345.63	1,526.00
Mercy Manor, North Lake, Aurora, IL 60505	.35	[2] 0
Aurora Laundry, 562 S. River, Aurora, IL 60506	1,009.15	656.00
K & K Well Drilling [3] 11630 Chayote Street, Los Angeles, CA 90049	164.94	107.00
Dart Container, 310 Evergreen Drive, N. Aurora, IL 60442	970.05	631.00
Geneva Construction, RR 25 W. Indian Trail Road, Aurora, IL 60506	19.68	[2] 13.00
Bowman, Waterman, IL 60556	518.70	337.00
Condux International, Box 69, Naperville, IL 60566	320.63	209.00
Comer's Welding, West Lake & Grey Avenue, Aurora, IL 60506	30.60	20.00
Ackley Brothers, RR #2 Box 139, Aurora, IL 60504	979.30	637.00
Curran, 237 Aurora Avenue, Naperville, IL 60540	160.80	105.00
Bale Service, Big Rock, IL 60511	4.32	[2] 3.00
Mosher Exteriors, address not available	444.22	289.00
RCA Association, address not available	118.34	77.00
North Oil, address not available	1,818.60	1,183.00
Wago, address not available	8.35	[2] 5.00
Model Ind., address not available	9.96	[2] 6.00
Glenwood Petro, address not available	323.40	210.00
Ward Library, address not available	80.59	52.00
Residential End Users, (unidentified)	8,789.30	5,717.00

[1] Rounded to the nearest dollar.

[2] In the absence of other evidence, these customers will not be eligible for refunds under the procedures set forth in the attached Decison, because their potential refund claims are below the minimum refund amount of $15.

[3] A copy of the PD&O was sent to K & K Well Drilling at the above address, but was returned to this Office unclaimed. Accordingly, we will not send a copy of the final Decision and Order to this firm, but it may still submit an application for refund in the present proceeding.

Appendix B—C.C. Dillon Company, 1342 Lonedell Rd., Arnold, MO 63010

Consent Order Period: Mar. 1, 1979 to Aug. 30, 1979.

Products Covered: motor gasoline (including gasohol).

Consent Order Amount: $48,788.23.[1]

Pro Rata Factor ($48,788.23 divided by $57,172.27): 8534:

Identified customers	Alleged overcharges	Potential refunds [2]
Bennet Hills Automotive Co., 10115 Manchester St., Kirkwood, MO	$949.75	$811.00
Big M Gas, 9626 Lackland Rd., Overland, MO	1,537.43	1,312.00
Bonafide Oil Company, 5735 Fee Fee Rd., Bridgeton, MO	748.27	639.00
Butler Hill Texaco, 4205 Butler Hill Rd., Mehlville, MO	304.47	260.00
Crystal Clean Carwash, 3955 Bayless St., St. Louis, MO	3,265.08	2,788.00
Green Park Texaco, 2730 Union Rd., St. Louis, MO 63125	332.35	284.00
Key & Sons Oil Company, Highway AT, Villa Ridge, MO 63089	350.81	299.00
Lieber Service Stations, 4036 Bayless Rd., St. Louis, MO	4,177.51	3,565.00
M & S Truck Stop,[3] 465 N. Highway Dr., Fenton, MO	1,778.08	1,517.00
Mr. Gas, P.O. Box 217, Birch Tree, MO 65438	10,780.60	9,200.00
Premium Oil Company, 5200 Pernod St., St. Louis, MO	1,214.50	1,036.00
Ray Oil Company, 12981 Gravois Rd., Sappington, MO	32.00	27.00
7-Eleven Division, Southland Corp., St. Louis Zone Office, 14288 Ladue Rd., Creve Coeur, MO	1,056.55	902.00
Site Oil Company, 7755 Carondelet Ave., St. Louis, MO	515.14	440.00
Swanter Motors "66", 501 W. Essex St., Kirkwood, MO	2,499.22	2,133.00
U-Gas, 105 Delores Dr., Fenton, MO	10,164.67	8,675.00
Watkin's Service Station, 2285 S. Highway 141, Fenton, MO	2,002.08	1,709.00
Brook's Service Station	541.04	462.00
Cooper Oil Company	1,759.48	1,502.00
Corral Truck Stop	3,522.36	3,006.00
Dickman's Mobil	13.62	[4] 12.00
F.A. Stein Oil	2,861.01	2,442.00
Hatcher Oil Company	92.06	79.00
Highway Oil Company	1,816.64	1,550.00
Husky Oil Company	231.26	197.00
Ideal Service Station	222.69	190.00
Jed Oil Company	489.02	417.00
Lamplighter Texaco	150.14	128.00
M.F.A. Station	128.31	109.00
Mack's "66"	307.01	262.00
National Stockyards	87.85	75.00
Oscar's "66"	217.95	186.00
Rayburn Sonic	944.11	806.00
Spencer's "66"	289.97	247.00
Target	631.26	539.00
Value Oil Company	144.16	123.00
Ward's Sonic	742.62	634.00
Class II "non-retail" unleaded gasoline customers (unidentified)	271.42	232.00

[1] Subsequent to the issuance of the PD&O, Dillon completed its payments to the DOE. The firm paid a total of $448,788.23, including interest that had accrued on the consent order amount prior to payment, to reflect the interest paid by the firm, the pro rata factor and the potential refund amounts have been adjusted from the figures utilized in the PD&O.

[2] Rounded to the nearest dollar.

[3] A copy of the PD&O was sent to M & S Truck Stop at the above address, but was returned to this Office unclaimed. Accordingly, we will not send a copy of the final Decision and Order to this firm, but it may still submit an application for refund in the present proceeding.

[4] In the absence of other evidence, Dickman's Mobil will not be eligible for a refund under the procedures set forth in the attached Decision, because the firm's potential refund claim is below the minimum refund amount of $15.

Appendix C—Enterprise Oil & Gas Company, 1445 Linwood Ave., Detroit, MI 48238

Consent Order Period: Nov. 1, 1973–June 30, 1976.

Products Covered:[1] middle distillates, residual fuels.

Consent Order Amount: $19,098.01 to reseller customers, $5,414.04 to end-user customers.[2]

[1] The Enterprise Consent Order, at ¶ 2, indicates that Enterprise also sold motor gasoline to resellers, but we have determined that the reference to motor gasoline was an error.

[2] There are several end-users of Enterprise petroleum products who were eligible for direct refunds under the terms of the Enterprise Consent Order but who could not be located by Enterprise. The $5,414.04 designated for these customers is currently being held in the DOE escrow account established for the Enterprise consent order funds. As proposed in the PD&O, any end-users listed in the Enterprise Consent Order who certify that they

Continued

Pro Rata Factor for reseller customers ($19,098.91 divided by $38,609.91): .4947.

Identified reseller customers	Alleged overcharges	Potential refunds[1]
Detroit Oil Barge, Address not available	$11,263.14	5,572.00
Jeneral Oil, Address not available	2,240.49	1,108.00
Kenneth H. White Company, 555 South Woodward, Birmingham, MI 48202	2,459.20	1,217.00
Osceola Refining, 2790 Refinery Road, West Branch, MI 48661	10,151.21	5,022.00
Triple CLean Oil, 601 Garfield Avenue, Bay City, MI 48706	12,495.87	6,182.00

[1] Rounded to the nearest dollar.

Appendix D—Foster Oil Company, 36065 Water St., Richmond, MI 48062

Consent Order Period: Nov. 1, 1973–Apr. 30, 1974.

Product Covered: motor gasoline.

Consent Order Amount: $9,497.00.

Pro Rata Factor ($9,497.00 divided by $20,456.14): .4643.

Identified customers	Alleged overcharges	Potential refunds[1]
Yezbick Corporation, Richard Yezbick, 260 Elizabeth Street, Mt. Clemens, MI 48043	$15,608.03	$7,247.00
Jim Pietro Arrow Service, 1215 E. Caro Road, Caro, MI 48723	1,802.19	837.00
Norm Adamic Arrow Service, 4055 Huron Avenue, North Branch, MI 48461	1,356.24	630.00
Carlos Service Center, 1505 Main Street, Snover, MI 48472	662.78	308.00
McLeod Truck Stop, 5800 W. Michigan Avenue, Ypsilanti, MI 48197	617.78	287.00
Wheel Truck Stop, 31414 Ecorse Road, Romulus, MI 48174	409.12	190.00

[1] Rounded to the nearest dollar.

[FR Doc. 85-8903 Filed 4-11-85; 8:45 am]

BILLING CODE 6450-01-M

Implementation of Special Refund Procedures

AGENCY: Office of Hearings and Appeals, Energy.

ACTION: Notice of Implementation of Special Refund Procedures.

SUMMARY: The Office of Hearings and Appeals of the Department of Energy announces the procedures for filing Applications for Refund from funds obtained as the result of DOE enforcement proceedings or civil litigation involving actual or alleged crude oil pricing violations by Beverly Hills Oil Company (HEF-0328), Jim Cox Oil Company (HEF-0345), E. Dunlap, Jr. (HEF-0351), James W. Harris Production Company (HEF-0369), and Prosper Energy Corporation (HEF-0485)

DATE AND ADDRESS: Applications for refund must be postmarked by July 11, 1985, should conspicuously display a reference to the specific case name and number and should be addressed to: Office of Hearings and Appeals, Department of Energy, 1000 Independence Avenue, SW., Washington, D.C. 20585.

FOR FURTHER INFORMATION CONTACT: Thomas O. Mann, Deputy Director, Office of Hearings and Appeals, 1000 Independence Avenue, SW., Washington, D.C. 20585, (202) 252-2094.

SUPPLEMENTARY INFORMATION: In accordance with § 205.282(c) of the procedural regulations of the Department of Energy (DOE), 10 CFR 205.282(c), notice is hereby given of the issuance of the Decision and Order set out below. The Decision and Order establishes procedures to distribute funds obtained as a result of DOE enforcement proceedings or civil litigation involving alleged or actual crude oil pricing violations by Beverly Hills Oil Company, Jim Cox Oil Company, E. Dunlap, Jr., James W. Harris Production Company and Prosper Energy Corporation. All or a portion of those funds have been paid to DOE and are being held in escrow under the jurisdiction of DOE pending receipt of instructions from OHA regarding their final distribution.

Any members of the public who believe that they are entitled to a refund in this proceeding may file Applications for Refund. All Applications should be postmarked by July 11, 1985, and should be sent to the address set forth at the beginning of this notice. Applications for refunds must be filed in duplicate and will be made available for public inspection between the hours of 1:00 and 5:00 p.m., Monday through Friday, except federal holidays, in the Public Docket Room of the Office of Hearings and Appeals, located in Room 1E-234, 1000 Independence Avenue, SW., Washington, DC. 20585.

Dated: April 4, 1985.

George B. Breznay,

Director, Office of Hearings and Appeals.

April 4, 1985.

Decision and Order of the Department of Energy

Implementation of Special Refund Procedures

Names of Firms: Beverly Hills Oil Co.; Jim Cox d/b/a Jim Cox Oil Co.; E. Dunlap, Jr./E. Dunlap Corp.; James W. Harris Production Co.; and Prosper Energy Corporation.

Dates of Filing: October 13, 1983; October 13, 1983; October 13, 1983; October 13, 1983; and January 20, 1984.

Case Numbers: HEF-0328; HEF-0345; HEF-0351; HEF-0369; and HEF-0485.

The proceeding involves Petitions for the Implementation of Special Refund Procedures filed by the Economic Regulatory Administration (ERA) with the Office of Hearings and Appeals (OHA) pursuant to the provisions of 10 CFR Part 205, Subpart V. Under those procedural regulations, ERA may request that OHA formulate and implement a specially-designed process to distribute funds received as a result of enforcement proceedings or court actions in order to remedy the effects of alleged or actual violations of the Department of Energy (DOE) regulations. On the dates listed above, the ERA filed Petitions for the Implementation of Special Refund Procedures in connection with remedial orders, consent orders or court orders involving Beverly Hills Oil Company and the other firms listed above. Pursuant to these orders, the firms were either required or agreed to make refunds totaling approximately $4,500,000 for actual violations or to settle alleged violations of the DOE pricing regulations. Some portion of those funds have been paid to the DOE and are being held in an escrow account under the jurisdiction of the DOE pending receipt of instructions from the OHA regarding their final distribution. These cases have been consolidated for purposes of this decision because each involves actual or alleged crude oil pricing or certification violations. In addition, the issues concerning the identification of injured parties are similar in each case.

Background

The parties in each of these cases were subject to the Mandatory Petroleum Price Regulations set forth in 6 CFR Part 150 and 10 CFR Part 212. DOE and its predecessor agencies conducted audits of these firms and the

---

did not receive a direct refund from Enterprise will be eligible for a refuned in the present proceeding. We will base their refunds on the amount they would have received under the terms of the Consent Order if Enterprise had initially been able to locate them.

investigations revealed actual or alleged violations of the Mandatory Petroleum Price Regulations with respect to the sale of crude oil.[1] The actual or alleged violations involved in these cases fall into two general categories. The first type of alleged violation involves incorrect certifications. E. Dunlap, Jr. [2] and Prosper Energy Corporation were alleged to have overcharged purchasers by an amount per barrel which represents the difference between the "new" or "stripper well" prices and the maximum price permitted for "old" oil. The second type of violation involved concerns alleged sales of controlled crude oil at prices in excess of the applicable ceiling price for "old" or "new" oil. Beverly Hills Oil Company and James W. Harris Production Company allegedly sold crude oil at prices that were based on the incorrect posted price. Jim Cox Oil Company committed unspecified "overcharge" violations relating to certain crude oil which it produced and sold.

On December 21, 1984, we issued a Proposed Decision and Order which tentatively set forth procedures to distribute refunds to parties who were injured by the five firms' alleged violations. 50 FR 3832 (January 28, 1985). In the proposed decision we described a two-stage process for the distribution of the funds made available by the consent order. We proposed to refund money in the first stage to identifiable purchasers of crude oil who were injured by the alleged overcharges. We stated that a second stage of the refund procedure may be necessary if funds remain after meritorious claims are paid in the first stage. In response to our proposed decision, several interested parties filed comments.

This decision establishes procedures for filing claims in the first stage of the refund proceeding and describes the information that a claimant should submit in order to demonstrate that it is eligible to receive a portion of the funds. In establishing these requirements, we have considered comments filed by Sun Company Inc. in response to the first-stage proposals in the December 21 decision. We will not, however, determine procedures for a second stage of the refund process in this decision. Although we received comments from several states regarding disposition of funds remaining at the conclusion of the first stage of the refund proceedings, it is premature for us to address the issues raised by the States until all the first-stage claims have been paid.

Jurisdiction

In previous Subpart V decisions, we have discussed at length our jurisdiction and authority to fashion special refund procedures. *See, e.g., Office of Enforcement*, 9 DOE ¶ 82,553 at 85,284 (1982). The DOE regulations provide that the Subpart V process may be used in situations where the Department of Energy is unable to readily identify persons who were or may have been injured by alleged violations or where it is unable to readily ascertain the amount of their alleged injuries. After reviewing the record developed in this proceeding, we have concluded that, although the identity of the first puchasers of individual firms' crude oil may be known, it may be difficult to identify other potentially injured parties and to determine to what extent a refund applicant may have been injured by the firm's pricing or certification practices. Under these circumstances, Subpart V provides a useful mechanism for devising a procedure to effect restitution. We will therefore grant ERA's Petitions for the Implementation of Special Refund Procedures and assume jurisdiction over the distribution of these funds.

Refund Procedures

We have previously established refund procedures for consent orders involving the same type of crude oil-related violations as those which are the subject of the present proceeding. In *Office on Enforcement: In the Matter of Alfred B. Alkek*, 9 DOE ¶ 82,521 (1982), 47 FR 2196 (January 14, 1982), (hereinafter cited as *Alkek*) and *Office of Enforcement: In the Matter of Adams Resources and Energy, Inc.*, 9 DOE ¶ 82,553 (1982) 47 FR 16381 (April 16, 1982) (hereinafter cited as *Adams*), which involved consent orders and remedial orders with 58 firms, we established a two-stage refund procedure for consent order and remedial order funds received as a result of alleged crude oil regulatory violations.[3] *See also A. Johnson & Co., Inc.*, 12 DOE ¶ 85,102 (1984), 49 FR 44541 (November 7, 1984) (establishing refund procedures like those in *Alkek and Adams* for funds obtained from 194 firms) (hereinafter cited as *A. Johnson*). The types of alleged violations that underlie the present proceedings are the same as those that were the subject of the *Alkek, Adams*, and *A. Johnson* proceedings. After having considered the comments we received concerning the first-stage proceedings tentatively adopted in our proposed decision, we have determined that it is appropriate to formulate a two-stage refund proceeding modeled after the *Alkek, Adams*, and *A. Johnson* proceedings. We therefore will

[1] Those regulations generally required crude oil producers to determine the first sale price of crude oil on the basis of the level of production from a property during a specified base period, *i.e.*, the base production control level (BPCL). *See* 6 CFR 150.354; 10 CFR 212.72-.74. The term "property" was defined as the right to produce crude oil which arises from a lease or fee interest. 6 CFR 150.354(b)(2); 10 CFR 212.72. Crude oil production that did not exceed the BPCL for a particular property was generally subject to the lower tier ("old" oil) ceiling price rule. 6 CFR 150.354; 10 CFR 212.73. Crude oil production that exceeded the BPCL ("new" oil) could generally be sold without regard to the ceiling price rule prior to February 1, 1976, and at the upper tier ceiling price level after that date. 6 CFR 150.354(c)(2); 10 CFR 212.74(a). Prior to February 1, 1976, in months in which new oil could be sold from a property additional volumes of crude oil could be sold as "released" oil at prices in excess of the applicable lower tier ceiling price level. 6 CFR 150.354(c)(3); 10 CFR 212.74(b). Additionally, crude oil produced from a "stripper well property" could generally be sold at market price levels. Producers and resellers of crude oil were generally required to certify in writing to each purchaser in the distribution chain the respective volumes of the various categories of price-controlled domestic crude oil included in each purchase. 10 CFR 212.131(a)(4), (b)(1). Refiners were required to report these certifications to the DOE and its predecessors when they processed the crude oil to enable the agency to administer the Entitlements Program, 10 CFR 211.67.

The Entitlements Program, 10 CFR 211.67, was part of the comprehensive program administered by the DOE for the mandatory pricing and allocation of crude oil, residual fuel oil and refined petroleum products. As discussed above, the federal regulations governing the price of crude oil created a price disparity between, on the one hand, foreign crude and uncontrolled domestic crude oil, and old and upper-tier (price-controlled) oil on the other hand. These price controls had an unequal effect on refiners and their downstream customers because some refiners had greater access to the cheap old oil than others. Firms which had little or no access to price-controlled oil had to purchase uncontrolled domestic or similarly expensive foreign crude oil. As a result, many firms with little or no access to price-controlled domestic reserves, experienced crude oil acquisition costs so high relative to the industry as a whole that those costs threatened their viability. To remedy these imbalances, the DOE established the Entitlements Program. 39 FR 31650 (1974); 39 FR 39740 (1974). Under the Entitlements Program, refiners with proportionally greater access to cheap price-controlled oil made cash payments, in the form of the purchase of entitlements, to refiners with less access to price-controlled oil. The program was designed to restore the competitive viability of the refining industry by generally equalizing among all domestic refiners the benefits associated with access to the lower-priced domestic crude oil.

[2] A Remedial Order was issued to E. Dunlap, Jr. on June 24, 1981. *See Dunlap, E., Jr.*, 8 DOE ¶ 83,016 (1981). By the terms of the remedial order, the firm was directed to pay $57,017.36 plus interest to the Department of Energy.

[3] We subsequently added to the Alkek/Adams "pool" the portion of the Amoco consent order funds that was allocated for crude oil claims. *See* Office of Special Counsel, 10 DOE ¶ 85,048 at 88,203. We have also discussed the potential distribution of crude oil overcharge funds in In re Stripper Well Exemption Litigation, Case No. HEF-0025, 48 FR 57608 (1983).

establish first-stage refund procedures in which we will accept refund applications to be adjudicated in the same manner and using the same principles as those first-stage refund applications that were filed pursuant to the *Alkek Adans*, and *A. Johnson* determinations.

In its comments on the proposed decision, the Sun Oil Company suggested that the so-called "regulatory methodology" which it advocated for distributing the Stripper Well overcharges would also be appropriate in this case. For an explanation of Sun's position see *Stripper Well Exemption Litigation*, 12 DOE ¶85,017 (1984), and Documents No. 00200 and 00235 filed therein. Sun alternatively suggested that, regardless of whether we adopt its "methodology," the Entitlements-related portions of the settlement funds in the present proceeding should be distributed in the same way as the Stripper Well overcharges. Sun's position is premised on the reasonable assumption that the cost of the alleged and actual violations underlying the present cases was spread through the Entitlements Program in a manner similar to that of the Stripper Well overcharges. *See Union Oil v. DOE*, 688 F.2d 797 (Temp. Emer. Ct. App. 1982). We anticipate that we will adopt a method of granting refunds in the consolidated *Alkek, Adams*, and *A. Johnson* proceeding which is consistent with that which OHA ultimately recommends to the District Court in the Stripper Well Exemption Litigation. However, because those matters are all currently under active consideration, this is neither an appropriate time nor place for discussing the merits of Sun's proposal.

We will now accept applications for refund for portions of the escrow accounts established with funds received from the above-listed firms. *See* 10 CFR 205.283. Parties who have filed claims in the *Alkek, Adams*, or *A. Johnson* refund proceedings, but who have not yet had a decision on those claims, will be deemed to have filed similar applications in this proceeding and therefore need not file a separate application. Other potential refiner and reseller claimants should file an application for refund following the guidelines outlined below. As we noted in *Alkek*, it would be premature for consumers and consumer groups to file applications for refund until the refiners' and resellers' claims have been resolved. *Alkek* at 85,136.

An application must be in writing, signed by the applicant, and must specify the name of the specific settlement fund to which it pertains, identified by firm name and case number. An applicant should indicate from whom the crude oil was purchased, and, if the applicant was not a direct purchaser from one of these five firms, it should also indicate the basis for its belief that it was injured by the firm's alleged regulatory violations forming the basis of this proceeding. In addition, a claimant who was subject to the DOE regulations must show that it was unable to pass through to its customers the price increases caused by the actual or alleged violations. Each applicant should report any past or present involvement as a party in DOE enforcement actions. If these actions have terminated, the applicant should furnish a copy of a final order issued in the matter. If the action is ongoing, the applicant should briefly describe the action and its current status. The applicant is under a continuing obligation to keep OHA informed of any change in status while its application for refund is being considered. *See* 10 CFR 205.9(d). Each application must also include the following statement: "I swear (or affirm) that the information submitted is true and accurate to the best of my knowledge and belief." *See* 10 CFR 205.283(c); 18 U.S.C. 1001. In addition, the applicant should furnish us with the name, position title, and telephone number of a person who may be contacted by us for additional information concerning the application.

All applications for refund must be filed in duplicate. A copy of each application will be available for public inspection in the Public Docket Room of the Office of Hearings and Appeals, Forrestal Building, Room 1E-234, 1000 Independence Avenue, S.W., Washington, D.C. Any applicant that believes that its application contains confidential information must so indicate on the first page of its application and submit two additional copies of its application from which the confidential information has been deleted, together with a statement specifying why any such information is privileged or confidential.

All applications should be sent to: Refund Proceeding, Office of Hearings and Appeals, Department of Energy, 1000 Independence Avenue, S.W., Washington, D.C. 20585. Applications for refund of a portion of the settlement and remedial order funds must be postmarked within 90 days after publication of this Decision and Order in the **Federal Register**. *See* 10 CFR 205.286. All applications for refund received within the time limit specified will be processed pursuant to 10 CFR 205.284.

It should be noted that four of the five firms involved in these proceedings have not deposited into the escrow account all of the moneys which they are legally obligated to pay.[4] As a result it is possible, but not likely, that applicants for refund from each of the funds might establish eligibility for refunds which exceeds the amount of funds currently available for distribution. In order to ensure that each applicant is treated fairly in the allocation of available funds, we will delay processing any of the applications received in each individual case until after the deadline for the filing of all applications in that case. We will then determine whether the applicants' combined eligibility for refund amounts exceed the available moneys. To the extent that the dollar value of potential refunds to applicants exceeds the amount of money available for distribution from each firm, we will decrease the amount of all refunds established in order to ensure that each applicant receives a proportional share of the applicable escrow fund. We emphasize, however, that should the funds available for distribution exceed the total amount of refunds for which applicants are eligible, no corresponding increasse in share size will be awarded.

Conclusion

The refund mechanisms and procedures outlined above for first-stage claims filed with DOE will be adopted. Because of the difficulty inherent in establishing the level of injury to parties in the present case, there may be a portion of the refund moneys remaining after all successful first-stage claimants have been paid even though three of the consent order firms and the remedial order firm have paid less into the escrow account than they are obligated to pay. As in previous cases, we shall hold in abeyance our determination as to appropriate second-stage procedures

[4] Proper Energy Corporation originally placed $3,293,911.11 into an escrow account in connection with civil litigation. The District Court subsequently ordered Prosper to place an additional $651,153.08 plus interest into the escrow account. That total amount, plus accrued interest, is available for distribution by OHA. With regard to the remaining firms, DOE records of escrow accounts through January 31, 1985 show that Beverly Hills Oil Company has paid $41,951 out of $161,951 and has filed for protection under federal bankruptcy laws. Jim Cox has paid $30,379.14 out of $32,879.41 and has defaulted on payments. The matter has been referred to the U.S. Department of Justice. The James W. Harris Production Company paid $103,509.74 out of $150,000 but no payments had been tendered since Septmber 1983. A demand letter was sent. E. Dunlap has paid a total of $100,536.73 into escrow and appears to be making timely payments toward amounts still owing under the Remedial Order.

for these cases until we know how much money will remain after first-stage claims are paid. *See Office of Enforcement*, 9 DOE ¶ 82,508 (1982).

It is Therefore Ordered That:

(1) Applications for Refunds from the funds remitted to the Department of Energy by Beverly Hills Oil Company pursuant to the Consent Order executed on June 7, 1982 may not be filed.

(2) Applications for Refunds from the funds remitted to the Department of Energy by James W. Harris Production Corporation pursuant to the Consent Order executed on September 5, 1979 may now be filed.

(3) Applications for Refunds from the funds remitted to the Department of Energy by Prosper Energy Corporation in conjunction with the court's order in *Prosper Energy Corporation v. DOE*, Civil Action No. 3-78-0651W (N.D. Tex.) may now be filed.

(4) Applications for Refunds from the funds remitted to the Department of Energy by Jim Cox in conjunction with the court-approved settlement in *Jim Cox d/b/a/ Jim Cox Oil Co v. DOE*, Civil Action No. 80-6-C (E.D. Okla.) may now be filed.

(5) Applications for Refunds from the funds remitted to the Department of Energy by E. Dunlap, Jr. pursuant to the Remedial Order issued to E. Dunlap, Jr. on June 24, 1981 may now be filed.

(6) All applications must be postmarked within 90 days after publication of this Decision and Order in the **Federal Register**.

Dated: April 4, 1985.

George B. Breznay,

Director, Office of Hearings and Appeals.

[FR Doc. 85-8904 Filed 4-11-85; 8:45 am]

BILLING CODE 6450-01-M

ENVIRONMENTAL PROTECTION AGENCY

[OPTS-51566; FRL-2816-7]

Certain Chemicals; Premanufacture Notices

AGENCY: Environmental Protection Agency (EPA).

ACTION: Notice.

SUMMARY: Section 5(a)(1) of the Toxic Substances Control Act (TSCA) requires any person who intends to manufacture or import a new chemical substance to submit a premanufacture notice (PMN) to EPA at least 90 days before manufacture or import commences. Statutory requirements for section 5(a)(1) premanufacture notices are discussed in EPA statements of the final rule published in the **Federal Register** of May 13, 1983 (48 FR 21722). This notice announces receipt of thirty-eight PMNs and provides a summary of each.

DATES: Close of Review Period:

P 85-724—June 26, 1985.

P 85-725, 85-726 and 85-727—June 29, 1985.

P 85-728, 85-729, 85-730, 85-731, 85-732, 85-733, 85-734, 85-735, 85-736, 85-737, 85-738, 85-739, 85-740, and 85-741—June 30, 1985.

P 85-742, 85-743, 85-744, 85-745, 85-746, 85-747, 85-748, 85-749, 85-750, 85-751, 85-752, 85-753, 85-754, 85-755, 85-756, 85-757 and 85-758—July 1, 1985.

P 85-759, 85-760 and 85-761—July 2, 1985.

Written comments by:

P 85-724—May 27, 1985.

P 85-725, 85-726 and 85-727—May 30, 1985.

P 85-728, 85-729, 85-730, 85-731, 85-732, 85-733, 85-734, 85-735, 85-736, 85-737, 85-738, 85-739, 85-740 and 85,741—May 31, 1985.

P 85-742, 85-743, 85-744, 85-745, 85-746, 85-747, 85-748, 85-749, 85-750, 85-751, 85-752, 85-753, 85-754, 85-755, 85-756, 85-757 and 85-758—June 1, 1985.

P 85-759, 85-760 and 85-761—June 2, 1985.

ADDRESS: Written comments, identified by the document control number "[OPTS-51566]" and the specific PMN number should be sent to: Document Control Officer (TS-793), Chemical Information Branch, Information Management Division, Office of Toxic Substances, Environmental Protection Agency, Rm. E-201, 401 M St., SW., Washington, DC 20460, (202-382-3532).

FOR FURTHER INFORMATION CONTACT: Wendy Cleland-Hamnett, Premanufacture Notice Management Branch, Chemical Control Division (TS-794), Office of Toxic Substances, Environmental Protection Agency, Rm. E-611, 401 M St., SW., Washington, DC 20460, (202-382-3725).

SUPPLEMENTARY INFORMATION: A nonsubstantive change in the prefixes is being initiated for information published under sections 5(d)(2) and 5(h)(6) of the Toxic Substances Control Act (TSCA). The notices will contain essentially the same information but the prefixes to the specific number assignment will appear in an abbreviated form. Prefixes under the modified format will use the letters "P" ((PMN), "T" (TMEA) and "Y" (POLYMER EXEMPTION). The following notice contains information extracted from the non-confidential version of the submission provided by the manufacturer on the PMNs received by EPA. The complete non-confidential document is available in the Public Reading Room E-107 at the above address.

P 85-724

Manufacturer. Confidential.

Chemical. (G) Ethoxylated thiol ether.

Use/Production. (G) An additive used in metal treating. Prod. range: Confidential.

Toxicity Data. No data submitted.

Exposure. Manufacturer: Dermal, a total of 1 worker, up to 2-3 hrs/da.

Environmental Release/Disposal. 25 kg/da released.

P 85-725

Manufacturer. Confidential.

Chemical. (G) Polymer of alkyl methacrylates, substituted alkyl methacrylate and styrene.

Use/Production. (G) Component of a coating. Prod. range: 212,000-241,000 kg/yr.

Toxicity Data. No data submitted.

Exposure. Manufacture and processing: Dermal, a total of 40 workers, up to 8 hrs/da, up to 69 da/yr.

Environmental Release/Disposal. 12 to 104 kg/batch released to land. Disposal by landfill.

P 85-726

Importer. Confidential.

Chemical. (G) Alicyclic carboxylic acid.

Use/Import. (G) Ingredient for use in consumer products; highly dispersive use. Import range: 100-1,000 kg/yr.

Toxicity Data. Acute oral: 3.64 g/kg; Acute dermal: >2.0 g/kg; Irritation: Skin—Non-irritant, Eye—Primary irritant; Repeated insult patch test: Negative; Ames Test: Not mutagenic; Photosensitization: Negative.

Exposure. Import: Dermal, a total of 3 workers, up to 1 hr/da, up to 20 da/yr.

Environmental Release/Disposal. Confidential. Disposal by private water treatment plant.

P 85-727

Importer. International Paint Company, Inc.

Chemical. Further clarification needed before information can be released to the public files.

Use/Import. (S) Industrial and commercial pigment for paint. Import range: Confidential.

Toxicity Data. Acute oral (4 wks): 1,000 mg/kg/da & >5 g/kg; Acute dermal: >2 g/kg; Irritation: Skin—No irritation, Eye—Mild to moderate; Chromosome aberrations test: Negative; Ames Test: Not mutagenic; Skin sensitization: Not sensitive; LC_{50} 48 hr (Daphnia magna): 88.8±7.9 parts per million (ppm); LC_{50} 96 hr (Rainbow

Trout): 200 ppm; BOD_5: <0.1 gO_2/g; COD: 0.354 gO_2/g; TOC: 0.092 gC/g; IC_{50}: >100 mg/l.

Exposure. Processing: Dermal and inhalation.

Environmental Release/Disposal. Confidential.

P 85-728

Manufacturer. The Dow Chemical Company.

Chemical. (G) Modified trisphenol novolac.

Use/Production. (S) Site-limited intermediate for epoxy resin. Prod. range: Confidential.

Toxicity Data. No data on the PMN substance submitted.

Exposure. Manufacture and use: Dermal, a total of 5 workers.

Environmental Release/Disposal. Release to air, water and land. Disposal by navigable waterway after treatment, incineration and landfull.

P 85-729

Manufacturer. Confidential.

Chemical. (G) Acrylate/methacrylate polymer with styrene.

Use/Production. (G) Industrial coating component. Prod. range: 100,000-395,000 kg/yr.

Toxicity Data. No data submitted.

Exposure. Manufacture and processing: Dermal, a total of 31 workers, up to 8 hrs/da, up to 160 da/yr.

Environmental Release/Disposal. 8 to 135 kg/batch released to land. Disposal by incineration and landfull.

P 85-730

Manufacturer. Confidential.

Chemical. (G) Substituted phosphate ester.

Use/Production. (G) An additive for certain plastics. Prod. range: Confidential.

Toxicity Data. Acute oral: Male—2,187 mg/kg, female—1,819 mg/kg, combined—1,995 mg/kg; Acute dermal: >20,000 mg/kg; Irritation: Skin—Non-irritant, Eye—Non-irritant; Inhalation: 20.6 mg/l; Ames Test: Non-mutagenic; BA1B/3T3 Test: No significant transformation.

Exposure. Confidential.

Environmental Release/Disposal. Confidential.

P 85-731

Manufacturer. P-S Chemicals, Inc.

Chemical. (G) Neutralized acrylic polymer.

Use/Production. (G) The product is used to control viscosities of water based slurries of calcium carbonate, clays, and mineral pigments. Prod. range: Confidential.

Toxicity Data. Acute oral (male and female): >5,000 mg/kg; Irritation: Skin—Slight, Eye—Slight.

Exposure. Manufacturer: Dermal, a total of 4 workers, up to 8 hrs/da, up to 220 da/yr.

Environmental Release/Disposal. 0.5 kg/batch released to water, Disposal by publicly owned treatment works (POTW).

P 85-732

Manufacturer. Ethyl Corporation.

Chemical. (G) Halogenated aromatic substituted alkane.

Use/Production. (G) Intermediate in process. Prod. range: Confidential.

Toxicity Data. No data submitted.

Exposure. Confidential.

Environmental Release/Disposal. Confidential.

P 85-733

Manufacturer. Ethyl Corporation.

Chemical. (G) Halogenated aromatic polymer.

Use/Production. (G) Flame retardant additive. Prod. range: Confidential.

Toxicity Data. Acute oral: Male—4,716 mg/kg, female—3,293 mg/kg; Acute dermal: >5,000 mk/kg; Irritation: Skin—Mild, Eye—Mild; Ames test: No reproducible genetic activity; HPC/DNA Repair Test: To reproducible genetic activity; HPC/DNA Repair Test: No reproducible genetic activity.

Exposure. Confidential.

Environmental Release/Disposal. Confidential.

P 85-734

Manufacturer. Ethyl Corporation.

Chemical. (G) Halogenated aromatic alkene.

Use/Production. (G) Intermediate in process. Prod. range: Confidential.

Toxicity Data. Acute oral: Male—4.7 g/kg, female—3.3 g/kg; Acute dermal: >5.0 g/kg; Irritation: Skin—Mild, Eye—Mild; Ames Test: No geotoxic activity; HPC/DNA Repair Assay: No genotoxic activity.

Exposure. Confidential.

Environmental Release/Disposal. Confidential.

P 85-735

Manufacturer. CIBA-GEIGY Corporation.

Chemical. (G) Substituted pyridine disazo dye.

Use/Production. (S) Industrial high temperature exhaust dyes polyester/polyester blends (wearing apparel) and continuous pad thermasol polyester/polyester blends household furnishings, sheeting, upholstery. Import range: Confidential.

Toxicity Data. Acute oral: >5,000 mg/kg; Acute dermal: >2,000 mg/kg; Irritation: Skin—Non-irritant, Eye—Non-irritant; Sub-acute 28-day feeding study: No observable effect level=100 ppm; Ames Test: Negative; Skin sensitization: Non-sensitizer; LC_0 96 hr (Zebra fish): >1,000 mg/l and >100 ppm; EC_{50} 24 hr (Daphnia magna): >100 mg/l; IC_{50} 3 hr: >100 mg/l; Micronucleus test: negative; COD: 1,569 and 1909.1 mg/gO_2; BOD_5: 20 and 0 mg/gO_2.

Exposure. Processing: inhalation, a total of 1 worker, up to 5 hr/da, up to 5 da/yr.

Environmental Release/Disposal. Less than 0.5 released to water. Disposal by POTW and navigable waterway.

P 85-736

Manufacturer. Hercules Incorporated.

Chemical. (G) Modified rosin, calcium-zinc salt.

Use/Production. (S) Industrial resin for publication gravure inks. Prod. range: Confidential.

Toxicity Data. No data submitted.

Exposure. Manufacturer: Dermal, a total of 50 workers, up to 3 hrs/da, up to 340 da/yr.

Environmental Release/Disposal. 10 kg/batch released.

P 85-737

Manufacturer. E.I. du Pont de Nemours & Company, Inc.

Chemical. (G) Copolymer of polyfluoroalkyl substituted methacrylate and polysubstituted methacrylates.

Use/Production. (G) Fabric finish, industrial use, nondispersive for consumer product. Prod. range: Confidential.

Toxicity Data. No data on the PMN substance submitted.

Exposure. Manufacture: Dermal, a total of 2 workers.

Environmental Release/Disposal. 10kg/batch contained for disposal to on-site waste water treatment.

P 85-738

Manufacturer. Confidential.

Chemical. (G) Alkyd resin.

Use/Production. (S) Alkyd resin is converted into paint. Prod. range: Confidential.

Toxicity Data. No data submitted.

Exposure. Confidential.

Environmental Release/Disposal. Confidential.

P 85-739

Manufacturer. SpecialyChem Products Corporation.

Chemical. (G) Alkylphenol.

Use/Production. (G) Open, non-dispersive use. Prod. range: Confidential.

Toxicity Data. Acute oral: >5.0 g/kg; Acute dermal: >2.0 g/kg; Irritation: Skin—Not a primary irritant, Eye—Irritant.

Exposure. Confidential.

Environmental Release/Disposal. 1kg/batch released to waste water. Disposal by waste disposal company.

P 85-740

Manufacturer. National Starch and Chemical Corporation.

Chemical. (G) Coplymer of acrylates and dimethyl diallyl ammonium chloride.

Use/Production. (S) Electroconductive polymer for copy paper. Prod. range: Confidential.

Toxicity Data. No data on the PMN substance submitted.

Exposure. Confidential.

Environmental Release/Disposal. Confidential.

P 85-741

Importer. Confidential.

Chemical. (G) Acrylic acid-acrylamidosulfonic acid co-polymer including phosphino groups.

Use/Import. (G) Water treatment additive for industrial systems. Import range: Confidential.

Toxicity Data. Acute oral: >10ml/kg; Irritation: Skin—Minimal.

Exposure. Use: dermal and ocular, a total of 45 workers, up to 1-4 hrs/da, up to 20-200 da/yr.

Environmental Release/Disposal. Release to water. Disposal by sewage treatment facility or directly into streams or rivers.

P 85-742

Manufacturer. Confidential.

Chemical. (G) Alkyl polyoxyalkylene phosphate esters.

Use/Production. (S) Surfactant for use as a component in dispersing agents. Prod. range: Confidential.

Toxicity Data. No data submitted.

Exposure. Manufacture: A total of 1 worker.

Environmental Release/Disposal. Confidential. Disposal by POTW.

P 85-743

Importer. Confidential.

Chemical. Further Clarification needed before information can be released to the public files.

Use/Import. (G) Adhesives for open, non-dispersive use. Import range: Confidential.

Toxicity Data. No data submitted.

Exposure. Confidential.

Environmental Release/Disposal. Confidential.

P 85-744

Importer. EM Industries.

Chemical. (S) 4-n-tetradecyl 4'-(2-μετηυλβθτυλ) πηεννλβενζοατε.

Use/Import. (S) Used in an encapsulated form to make sensitive devices (thermometers, thermographs). Import range: 20-500 kg/yr.

Toxicity Data. Acute oral: >5.0 g/kg; Ames Test: Not mutagenic.

Exposure. Use: dermal, a total of 1-2 workers, up to 8 hrs/da, up to 5 da/wk.

Environmental Release/Disposal. No release.

P 85-745

Importer. EM Industries.

Chemical. (S) (+)-4-n-hexyloxyphenyl 4-(2-methylbutyl) biphenyl 4'-carboxylate.

Use/Import. (S) Used in an encapsulated form to make sensitive devices (thermometers, thermographs). Import range: 20-500 kg/yr.

Toxicity Data. Acute oral: >5.0 g/kg; Ames Test: Not mutagenic.

Exposure. Use: Dermal, a total of 1-2 workers, up to 8 hrs/da, up to 5 da/wk.

Environmental Release/Disposal. No release.

P 85-746

Importer. EM Industries.

Chemical. (S) (+)-4-(2-methylbutyl) phenyl 4-(2-methylbutyl) biphenyl 4'-carboxylate.

Use/Import. (S) Used in an encapsulated form to make sensitive devices (thermometers, thermographs). Import range: 20-500 kg/yr.

Toxicity Data. Acute oral: >5.0 g/kg; Ames Test: Not mutagenic.

Exposure. Use: Dermal, a total of 1-2 workers, up to 8 hrs/da, up to 5 da/wk.

Environmental Release/Disposal. No release.

P 85-747

Importer. EM Industries.

Chemical. (S) (+)-4-cyanophenyl-4-(2-"-methylbutyl) biphenyl 4'-carboxylate.

Use/Import. (S) Used in an encapsulated form to make sensitive devices (thermometers, thermographs). Import range: 20-500 kg/yr.

Toxicity Data. Acute oral: >5.0 g/kg; Ames Test: Not mutagenic.

Exposure. Use: Dermal, a total of 1-2 workers, up to 8 hrs/da, up to 5 da/wk.

Environmental Release/Disposal. No release.

P 85-748

Importer. EM Industries.

Chemical. (S) 4-n-octyloxyl >-(2-methylbutyl)-phenylbenzoate.

Use/Import. (S) Used in an encapsulated form to make sensitive devices (thermometers, thermographs). Import range: 20-500 kg/yr.

Toxicity Data. Acute oral: >5.0 g/kg; Ames Test: Not mutagenic; Irritation: Skin—Slight, Eye—Temporary; Delayed contact hypersensitivity: Positive.

Exposure. Use: Dermal, a total of 1-2 workers, up to 8 hrs/da, up to 5 da/wk.

Environmental Release/Disposal. No release.

P 85-749

Importer. EM Industries.

Chemical. (S) 4-n-hexyloxy 4'-(2-methylbutyl) phenylbenzoate.

Use/Import. (S) Used in an encapsulated form to make sensitive devices (thermometers, thermographs). Import range: 20-500 kg/yr.

Toxicity Data. Acute oral: >5.0 g/kg; Ames Test: Not mutagenic; Irritation: Skin—Slight, Eye—Temporary; Delayed contact hypersensitivity: Positive.

Exposure. Use: Dermal, a total of 1-2 workers, up to 8 hrs/da, up to 5 da/wk.

Environmental Release/Disposal. No release.

P 85-750

Importer. EM Industries.

Chemical. (S) 4-n-decyloxy 4'-(2 methylbutyl)-phenylbenzoate.

Use/Import. (S) Used in an encapsulated form to make sensitive devices (thermometers, thermographs). Import range: 20-500 kg/yr.

Toxicity Data. Acute oral: >5.0 g/kg; Ames Test: Not mutagenic; Irritation: Skin—Slight, Eye—Temporary; Delayed contact hypersensitivity: Negative.

Exposure. Use: Dermal, a total of 1-2 workers, up to 8 hrs/da, up to 5 da/wk.

Environmental Release/Disposal. No release.

P 85-751

Importer. EM Industries.

Chemical. (S) 4-n-dodecyloxy 4'-(2 methylbutyl)-phenylbenzoate.

Use/Import. (S) Used in an encapsulated form to make sensitive devices (thermometers, thermographs). Import range: 20-500 kg/yr.

Toxicity Data. Acute oral: >5.0 g/kg; Ames Test: Not mutagenic; Irritation: Skin—Slight, Eye—Temporary; Delayed contact hypersensitivity: Negative.

Exposure. Use: Dermal, a total of 1-2 workers, up to 8 hrs/da, up to 5 da/wk.

Environmental Release/Disposal. No release.

P 85-752

Importer. EM Industries.

Chemical. (S) 4(2-methylbutyl)phenyl 4'-n-octylbiphenyl carboxylate.

Use/Import. (S) Used in an encapsulated form to make sensitive

devices (thermometers, thermographs). Import range: 20–500 kg/yr.

Toxicity Data. Acute oral: >5.0 g/kg; Ames Test: Not mutagenic.

Exposure. Use: Dermal, a total of 1–2 workers, up to 8 hrs/da, up to 5 da/wk.

Environmental Release/Disposal. No release.

P 85–753

Importer. EM Industries.

Chemical. (S) 4-n-propyl 4'-(2-methylbutyl)-phenylbenzoate.

Use/Import. (S) Used in an encapsulated form to make sensitive devices (thermometers, thermographs). Import range: 20–500 kg/yr.

Toxicity Data. Acute oral: >5.0 g/kg; Ames Test: Not mutagenic; Irritation: Skin—Slight, Eye—Temporary; Delayed contact hypersensitivity: Positive.

Exposure. Use: Dermal, a total of 1–2 workers, up to 8 hrs/da, up to 5 da/wk.

Environmental Release/Disposal. No release.

P 85–754

Importer. EM Industries.

Chemical. (S) 4-n-pentyl 4'-(2-methylbutyl)-phenylbenzoate.

Use/Import. (S) Used in an encapsulated form to make sensitive devices (thermometers, thermographs). Import range: 20–500 kg/yr.

Toxicity Data. Acute oral: >5.0 g/kg; Ames Test: Not mutagenic; Irritation: Skin—Slight, Eye—Temporary; Delayed contact hypersensitivity: Positive.

Exposure. Use: Dermal, a total of 1–2 workers, up to 8 hrs/da, up to 5 da/wk.

Environmental Release/Disposal. No release.

P 85–755

Importer. EM Industries.

Chemical. (S) 4(2-methylbutyl) phenyl 4'-n-heptylbiphenyl carboxylate.

Use/Import. (S) Used in an encapsulated form to make sensitive devices (thermometers, thermographs). Import range: 20–500 kg/yr.

Toxicity Data. Acute oral: >5.0 g/kg; Ames Test: Not mutagenic; Irritation: Skin—Slight, Eye—Temporary; Delayed contact hypersensitivity: Negative.

Exposure. Use: Dermal, a total of 1–2 workers, up to 8 hrs/da, up to 5 da/wk.

Environmental Release/Disposal. No release.

P 85–756

Importer. EM Industries.

Chemical. (S) 4-n-heptyl 4'-(2-methylbutyl)-phenylbenzoate.

Use/Import. (S) Used in an encapsulated form to make sensitive devices (thermometers, thermographs). Import range: 20–500 kg/yr.

Toxicity Data. Acute oral: >5.0 g/kg; Ames Test: Not mutagenic.

Exposure. Use: Dermal, a total of 1–2 workers, up to 8 hrs/da, up to 5 da/wk.

Environmental Release/Disposal. No release.

P 85–757

Importer. EM Industries.

Chemical. (S) 4-n-nonyl 4'-(2-methylbutyl) phenylbenzoate.

Use/Import. (S) Used in an encapsulated form to make sensitive devices (thermometers, thermographs). Import range: 20–500 kg/yr.

Toxicity Data. Acute oral: >5.0 g/kg; Ames Test: Not mutagenic.

Exposure. Use: Dermal, a total of 1–2 workers, up to 8 hrs/da, up to 5 da/wk.

Environmental Release/Disposal. No release.

P 85–758

Importer. EM Industries.

Chemical. (S) 4-(2-methylbutyl) 4'-pentylbiphenyl carboxylate.

Use/Import. (S) Used in an encapsulated form to make sensitive devices (thermometers, thermographs). Import range: 20–500 kg/yr.

Toxicity Data. Acute oral: >5.0 g/kg; Ames Test: Not mutagenic.

Exposure. Use: Dermal, a total of 1–2 workers, up to 8 hrs/da, up to 5 da/yr.

Environmental Release/Disposal. No release.

P 85–759

Manufacturer. The Dow Chemical Company.

Chemical. (G) Advancement product of modified triglycidyl ether of tri(hydroxyphenyl) methane.

Use/Production. (S) Industrial transfer molding of electronic parts and manufacture of printed circuit board, electrical laminates and structural composites. Prod. range: Confidential.

Toxicity Data. No data on the PMN substance submitted.

Exposure. Manufacture: Dermal and inhalation, a total of 20 workers.

Environmental Release/Disposal. Up to 0.5 kg/sample released to air or land with an estimated less than 0.02 kg/batch to water. Disposal by navigable waterway after treatment, incineration and landfill.

P 85–760

Manufacturer. Confidential.

Chemical. (G) Functional acrylic copolymer.

Use/Production. (G) Industrial coatings component. Prod. range: 100,000–402,000 kg/yr.

Toxicity Data. No data submitted.

Exposure. Manufacture and processing: Dermal, a total of 29 workers, up to 8 hrs/da, up to 188 da/yr.

Environmental Release/Disposal. 7 to 125 kg/batch released to land. Disposal by incineration and landfill.

P 85–761

Manufacturer. UNIROYAL, Inc.

Chemical. (G) Diphenylmethane diisocyanate terminated polyol polyurethane prepolymer.

Use/Production. (S) Industrial durable polymer for molded products—e.g., sheeting used for chute fabrication. Prod. range: Confidential.

Toxicity Data. No data submitted.

Exposure. Manufacture: Dermal, a total of 3 workers, up to 2 hrs/da, up to 14 da/yr.

Environmental Release/Disposal. No release.

Dated: April 8, 1985.

V. Paul Fuschini,

Acting Director, Information Management Division.

[FR Doc. 85–8827 Filed 4–11–85; 8:45 am]

BILLING CODE 6560–50–M

[OPTS–59190; FRL–2816–8]

Certain Chemicals; Test Marketing Exemption Applications

AGENCY: Environmental Protection Agency (EPA).

ACTION: Notice.

SUMMARY: EPA may upon application exempt any person from the premanufacturing notification requirements of section 5 (a) or (b) of the Toxic Substances Control Act (TSCA) to permit the person to manufacture or process a chemical for test marketing purposes under section 5(h)(1) of TSCA. Requirements for test marketing exemption (TME) applications, which must either be approved or denied within 45 days of receipt, are discussed in EPA's final rule published in the **Federal Register** of May 13, 1983 (48 FR 21722. This notice, issued under section 5(h)(6) of TSCA, announces receipt of two applications for an exemption, provides a summary, and requests comments on the appropriateness of granting each of the exemptions.

DATE: Written comments by: April 29, 1985.

ADDRESS: Written comments, identified by the document control number "[OPTS–59190]" and the specific TME number should be sent to: Document Control Officer (TS–793), Chemical Information Branch, Information Management Division, Office of Toxic Substances, Environmental Protection Agency, Rm. E–4201, 401 M Street, SW, Washington, DC 20460, (202–382–3532).

FOR FURTHER INFORMATION CONTACT: Wendy Cleland-Hamnett, Premanufacture Notice Management Branch, Chemical Control Division (TS-794), Office of Toxic Substances, Environmental Protection Agency, Rm. E-611, 401 M Street, SW, Washington, DC 20460, (202-382-3725).

SUPPLEMENTARY INFORMATION: A nonsubstantive change in the prefixes is being initiated for information published under sections 5(d)(2) and 5(h)(6) of the Toxic Substances Control Act (TSCA). The notices will contain essentially the same information but the prefixes to the specific number assignment will appear in an abbreviated form. Prefixes under the mofified format will use the letters "T" (TMEA), "P" (PMN) and "Y" (POLYMER EXEMPTION). The following notice contains information extracted from the non-confidential version of the submission provided by the manufacturer on the TME received by EPA. The complete non-confidential document is available in the Public Reading Room E-107 at the above address.

T 85-37

Close of Review Period. May 15, 1985.

Manufacturer. Confidential.

Chemical. (G) Polyol adducted with an aromatic isocyanate.

Use/Production. (S) For use as a two component polyurethane compound for potting and encapsulating electrical components. Prod. range: Confidential.

Toxicity Data. Acute oral: >20 g/kg; Acute dermal: 15.8 g/kg; Irritation: Skin—Slight, Eye—Non-irritant, Inhalation: 370 mg/m^3.

Exposure. Manufacture: Dermal and inhalation, a total of 9 workers, up to 1 hr/da.

Environmental Release/Disposal. No data submitted.

T 85-38

Close of Review Period. May 16, 1985.

Importer. Confidential.

Chemical. (G) Acrylic acid-acrylamidosulfonic acid co-polymer including phosphino groups.

Use/Import. (G) Water treatment additive for industrial systems. Prod. range: Confidential.

Toxicity Data. Acute oral: >10 mg/kg; Irritation: Minimal.

Exposure. Import: Dermal, a total of 45 workers, 1-4 hrs/da, 20-200 da/yr.

Environmental Release/Disposal. Release to water. Disposal by discharging into a sewage treatment facility or directly into streams and rivers.

Dated: April 8, 1985.

V. Paul Fuschini,

Acting Director, Information Management Division.

[FR Doc. 85-8824 Filed 4-11-85; 8:45 am]

BILLING CODE 6560-50-M

[OPP-180671; FRL-2816-6]

North Dakota Department of Agriculture; Receipt of Application for Emergency Exemption To Use 2-Methoxy-N-(2-Oxo-1,3-Oxazolin-3-yl)-Acet-2',6'-Xylidine; Solicitation of Public Comment

AGENCY: Environmental Protection Agency.

ACTION: Notice.

SUMMARY: EPA has received a request for an emergency exemption from the North Dakota Department of Agriculture (hereafter referred to as the "Applicant") to use the active ingredient 2-methoxy-N-(2-oxo-1,3-oxazolin-3-yl)-acet-2',6'-xylidine, (Oxadixyl, ISO Approved; formulated by Gustafson Corp. as Anchor 25% Dust Fungicide) to control downy mildew on 1,450,000 acres of sunflowers in North Dakota. It is the Agency's policy to solicit public comment on applications involving active ingredients which have no registered end uses. Accordingly, EPA is soliciting comment before making the decision whether or not to grant the exemption.

DATE: Comments must be received on or before April 29, 1985.

ADDRESS: Three copies of written comments, bearing the identifying notation "OPP/180671," should be submitted by mail to:

Information Services Section, Program Management and Support Division (TS-757C), Office of Pesticide Programs, Environmental Protection Agency, 401 M St., SW., Washington, D.C. 20460.

In person, bring comments to: Rm. 236, CM±2, 1921 Jefferson Davis Highway, Arlington, VA.

Information submitted in any comment concerning this notice may be claimed confidential by marking any part or all of that information as "Confidential Business Information (CBI)." Information so marked will not be disclosed except in accordance with procedures set forth in 40 CFR Part 2. A copy of the comment that does not contain CBI must be submitted for inclusion in the public record. Information not marked confidential may be disclosed publicly by EPA without prior notice to the submitter. All written comments will be available for inspection in Rm. 236 at the address given above from 8 a.m. to 4 p.m., Monday through Friday, excluding legal holidays.

FOR FURTHER INFORMATION CONTACT:

By mail: Libby Welch, Registration Division (TS-767C), Office of Pesticide Programs, Environmental Protection Agency, 401 M St., SW., Washington, D.C. 20460

Office location and telephone number: Rm. 716A, Crystal Mall 2, 1921 Jefferson Davis Highway, Arlington, VA, (703-557-1192).

SUPPLEMENTARY INFORMATION: Pursuant to section 18 of the Federal Insecticide, Fungicide, and Rodenticide Act (FIFRA) (17 U.S.C. 136p), the Administrator may, at his discretion, exempt a State agency from any provision of FIFRA if he determines that emergency conditions exist which requires such exemption.

The Applicant has requested the Administrator to issue a specific exemption to permit the use of 2-methoxy-N-(2-oxo-1,3-oxazolin-3-yl)-acet-2',6'-xylidine), available as Anchor 25% Dust Fungicide from Gustafson Corp., to control downy mildew caused by the *Plasmopara halstedii* on 1,450,000 acres of sunflowers grown in North Dakota. Information in accordance with 40 CFR Part 166 was submitted as part of this request.

The Applicant indicates that downy mildew is not adequately controlled by existing cultural methods or registered pesticides, and all sunflower hybirds are susceptible to the new races of downy mildew.

The Applicant indicates that the only two fungicides which are currently registered for use on sunflowers are Maneb and Captan. The Applicant indicates that neither of those fungicides have controlled sunflower downy mildew in their trials. Specific exemptions were issued in 1982, 1983, and 1984 for use of metalaxyl to control downy mildew in sunflowers. At this time the Agency will not entertain a request for this use of metalaxyl due to a lack of an adequate mammatian toxicity data base for metalaxyl. The Applicant estimates the crop value of 1,450,000 acres of sunflowers to be $174,000,000. The Applicant states that yield reductions caused by downy mildew will reach 1.2%. Thus, the Applicant estimates, the economic benefit from the use of Anchor would be a total of $2,090,000.

Anchor will be applied at a maximum rate of 1.0 ounce of active ingredient per hundred weight of seed. A maximum of one application will be made. A total of 362,500 pounds of active ingredient will

be required to treat the seed necessary to plant 1,450,000 acres of sunflowers. Anchor will be applied by individual growers at time of planting. Applications would be made from May 1 through July 1, 1985.

This notice does not constitute a decision by EPA on the application itself. Interested persons may submit written views on this subject to the Program Management and Support Division at the address above. The comments must be received on or before April 29, 1985 and should bear the indentifying notation "OPP 180671." All written comments filed pursuant to this notice will be available for public inspection in Rm. 236, Crystal Mall No. 2 at the address given above, from 8 a.m. to 4 p.m., Monday through Friday, except legal holidays.

The Agency, accordingly, will review and consider all comments received during the comment period in determining whether to issue the emergency exemption requested by North Dakota.

Dated: April 4, 1985.

Douglas D. Campt,

Director, Registration Division.

[FR Doc. 85-8828 Filed 4-11-85; 8:45 am]

BILLING CODE 6560-50-M

[OPTS-59165C TSH-FRL 2817-7]

Certain Chemicals; Approval of Petition for Modification of Test Marketing Exemptions

AGENCY: Environmental Protection Agency (EPA).

ACTION: Notice.

SUMMARY: This notice announces EPA's approval of a petition for modification of four test marketing exemptions (TMEs) under section 5(h)(6) of the Toxic Substances Control Act (TSCA), TME-84-67, TME-84-68, TME-84-69, and TME-84-70. The modification conditions are described below.

EFFECTIVE DATE: April 2, 1985.

FOR FURTHER INFORMATION CONTACT: R. James Alwood, Premanufacture Notice Management Branch, Chemical Control Division (TS-794), Office of Toxic Substances, Environmental Protection Agency, Rm. E-613C, 401 M St. SW., Washington, DC. 20460, (202-382-3374).

SUPPLEMENTARY INFORMATION: Section 5(h)(1) of TSCA authorizes EPA to exempt persons from premanufacture notification (PMN) requirements and permit them to manufacture or import new chemical substances for test marketing purposes if the Agency finds that the manufacture, processing, distribution in commerce, use, and disposal of the substances for test marketing purposes will not present any unreasonable risk of injury to health or the environment. EPA may impose restrictions on test marketing activities and may modify or revoke a test marketing exemption upon receipt of new information which casts significant doubt on its finding that the test marketing activity will not present any unreasonable risk of injury

On September 7, 1984, TMEs 84-67, 84-68, 84-69, and 84-70 became effective. The notice of approval of these TMEs was published on September 18, 1984 (49 FR 36564). On February 25, 1985, the Company petitioned for modification of the TMEs. EPA hereby approves the petition for modification of TME-84-67, TME-84-68, TME-84-69, and TME-84-70. EPA has determined that test marketing of the new chemical substances subject to these TMEs, under the conditions described in the original notice of approval as modified by this notice of approval of petition for modification of test marketing exemptions, will not present any unreasonable risk of injury to health or the environment. All conditions and restrictions described in the original notice of approval and in this notice of approval must be met.

TME-84-67

Notice of Approval of Test Market Exemption: September 18, 1984 (49 FR 36564).

Risk Assessment: No significant health or environmental concerns were identified. Therefore, the test market substance will not present any unreasonable risk of injury to health or the environment.

Modification: This modification allows the Company to ship some of the TME substance, without neutralizing it, at a pH of 2.5-3.

Public Comments: None.

TME-84-68

Notice of Approval of Test Market Exemption: September 18, 1984 (49 FR 36564)

Risk Assessment: No significant health or environmental concerns were identified. Therefore, the test market substance will not present any unreasonable risk of injury to health or the environment.

Modification: This modification allows the Company to ship some of the TME substance, without neutralizing it, at a pH of 2.5-3.

Public Comments: None.

TME-84-69

Notice of Approval of Test Market Exemption: September 18, 1984 (49 FR 36564)

Risk Assessment: No Significant health or environmental concerns were identified. Therefore, the test market substance will not present any unreasonable risk of injury to health or the environment.

Modification: This modification allows the Company to ship some of the TME substance, without neutralizing it, at a pH of 2.5-3.

Public Comments: None.

TME-84-70

Notice of Approval of Test Market Exemption: September 18, 1984 (49 FR 36564)

Risk Assessment: No Significant health or environmental concerns were identified. Therefore, the test market substance will not present any unreasonable risk of injury to health or the environment.

Modification: This modification allows the Company to ship some of the TME substance, without neutralizing it, at a pH of 2.5-3.

Public Comments: None.

The Agency reserves the right to rescind approval or modify the conditions and restrictions of an exemption should any new information come to its attention which casts signficant doubt on its finding that the test marketing activities will not present any unreasonable risk of injury to health or the environment.

Dated: April 2, 1985.

Don R. Clay,

Director, Office of Toxic Substances.

[FR Doc. 85-8820 Filed 4-11-85; 8:45 am]

BILLING CODE 6560-50-M

[OPTS-59185A TSH-FRL 2817-6]

Certain Chemicals; Approval of Test Marketing Exemptions

AGENCY: Environmental Protection Agency (EPA).

ACTION: Notice.

SUMMARY: This notice announces EPA's approval of four applications for test marketing exemptions (TME) under section 5(h)(6) of the Toxic Substances Control Act (TSCA), TME-85-24, TME-85-25, TME-85-26, and TME-85-27. The test marketing conditions are described below.

EFFECTIVE DATE: April 5, 1985.

FOR FURTHER INFORMATION CONTACT: Rose Allison, Premanufacture Notice Management Branch, Chemical Control Division (TS-794), Office of Toxic Substances, Environmental Protection Agency, Rm. E-611E, 401 M St. SW., Washington, DC. 20460, (202) 382-3391.

SUPPLEMENTARY INFORMATION: Section 5(h)(1) of TSCA authorizes EPA to exempt persons from premanufacture notification (PMN) requirements and permit them to manufacture or import new chemical substances for test marketing purposes if the Agency finds that the manufacture, processing, distribution in commerce, use and disposal of the substances for test marketing purposes will not present any unreasonable risk of injury to health or the environment. EPA may impose restrictions on test marketing activities and may modify or revoke a test marketing exemption upon receipt of new information which casts significant doubt on its finding that the test marketing activity will not present any unreasonable risk of injury.

EPA hereby approves TME-85-24, TME-85-25, TME-85-26, and TME-85-27. EPA has determined that test marketing of the new chemical substances described below, under the conditions set out in the TME applications, and for the time period and restrictions (if any) specified below, will not present any unreasonable risk of injury to health or the environment. The production volume, use and the number of customers must not exceed that specified in the application.

The following additional restrictions apply to TME-85-24, TME-85-25, TME-85-26, and TME-85-27. A bill of lading accompanying each shipment must state that use of the substance is restricted to that approved in the TME. In addition, the Company shall maintain the following records until five years after the dates they are created, and shall make them available for inspection or copying in accordance with section 11 of TSCA:

1. The applicant must maintain records of the quantity of the TME substance produced and must make these records available to EPA upon request.

2. The applicant must maintain records of the dates of shipment to each customer and the quantities supplied in each shipment, and must make these records available to EPA upon request.

3. The applicant must maintain copies of the bill of lading that accompanies each shipment of the TME substance.

T85-24

Date of Receipt: February 21, 1985.

Notice of Receipt: March 1, 1985 (50 FR 8393).

Applicant: Products Research and Chemical Corporation.

Chemical: (G) Polymer of ethanol 2-mercapto, oxirane extended, hydroxy terminated, reaction product with silane, substituted propyl triethoxy.

Use: (S) Adhesion promoting ingredient.

Production Volume: 1,000 pounds.

Number of Customers: Fifty.

Worker Exposure: During manufacture, 4 workers may be exposed dermally up to 8 hours per day for up to 50 days. During use, 120 workers may be exposed dermally up to 8 hours per day for up to 200 days.

Test Marketing Period: Twelve months.

Commencing on: April 5, 1985.

Risk Assessment: EPA identified no significant health or environmental concerns. Therefore, the test market substance will not present any unreasonable risk of injury to health or the environment.

Public Comments: None.

T85-25

Date of Receipt: February 21, 1985.

Notice of Receipt: March 1, 1985.

Applicant: Products Research and Chemical Corporation.

Chemical: (G) Polymer of ethanol 2,2'-thiobis, ethanol, 2-mercapto, and oxirane, methyl, reaction product with aliphatic isocyanate and substituted aliphatic amine.

Use: (S) Adhesion promoting ingredient.

Production Volume: 1,000 pounds.

Number of Customers: Fifty.

Worker Exposure: During manufacture, 4 workers may be exposed dermally up to 8 hours per day for up to 50 days. During use, 120 workers may be exposed dermally up to 8 hours per day for up to 100 days.

Test Marketing Period: Twelve months.

Commencing on: April 5, 1985.

Risk Assessment: EPA identified no significant health or environmental concerns. Therefore, the test market substance will not present any unreasonable risk of injury to health or the environment.

Public Comments: None.

T85-26

Date of Receipt: February 21, 1985.

Notice of Receipt: March 1, 1985 (50 FR 8393).

Applicant: Products Research and Chemical Corporation.

Chemical: (G) Polymer of ethanol 2,2'-thiobis, ethanol, 2-mercapto, and oxirane, methyl, reaction product with silane, substituted propyl triethoxy.

Use: (S) Adhesion promoting ingredient.

Production Volume: 1,000 pounds.

Number of Customers: Fifty.

Worker Exposure: During manufacture, 4 workers may be exposed dermally up to 8 hours per day for up to 50 days. During use, 120 workers may be exposed dermally up to 8 hours per day for up to 100 days.

Test Marketing Period: Twelve months.

Commencing on: April 5, 1985.

Risk Assessment: EPA identified no significant health or environmental concerns. Therefore, the test market substance will not present any unreasonable risk of injury to health or the environment.

Public Comments: None.

T85-27

Date of Receipt: February 21, 1985.

Notice of Receipt: March 1, 1985 (50 FR 8393).

Applicant: Products Research and Chemical Corporation.

Chemical: (G) Polymer of ethanol 2-mercapto, oxirane, extended, Hydroxy terminated, reaction product with aliphatic isocyanate and substituted aliphatic amine.

Use: (S) Adhesion promoting ingredient.

Production Volume: 1,000 pounds.

Number of Customers: Fifty.

Worker Exposure: During manufacture, 4 workers may be exposed dermally up to 8 hours per day for up to 50 days. During use, 120 workers may be exposed dermally up to 8 hours per day for up to 200 days.

Test Marketing Period: Twelve months.

Commencing on: April 5, 1985.

Risk Assessment: EPA identified no significant health or environmental concerns. Therefore, the test market substance will not present any unreasonable risk of injury to health or the environment.

Public Comments: None.

The Agency reserves the right to rescind approval or modify the conditions and restrictions of an exemption should any new information come to its attention which casts significant doubt on its finding that the test marketing activities will not present any unreasonable risk of injury to health or the environment.

Dated: April 5, 1985.

Don R. Clay,

Director, Office of Toxic Substances.

[FR Doc. 85-8821 Filed 4-11-85; 8:45 am]

BILLING CODE 6560-50-M

[OPTS-59710; FRL-2816-9]

Certain Chemicals; Premanufacture Notice

AGENCY: Environmental Protection Agency (EPA).

ACTION: Notice.

SUMMARY: Section 5(a)(1) of the Toxic Substances Control Act (TSCA) requires any person who intends to manufacture or import a new chemical substance to submit a premanufacture notice (PMN) to EPA at least 90 days before manufacture or import commences. Statutory requirements for section 5(a)(1) premanufacture notices are discussed in EPA statements of the final rule published in the **Federal Register** of May 13, 1983 (48 FR 21722). In the **Federal Register** of November 11, 1984 (49 FR 46066) (40 CFR 723.250), EPA published a rule which granted a limited exemption from certain PMN requirements for certain types of polymers. PMNs for such polymers are reviewed by EPA within 21 days of receipt. This notice announces receipt of seven such PMNs and provides a summary of each.

DATES: Close of Review Period for Y 85-36, 85-37, 85-38 and 85-39: April 21, 1985. Y 85-40, 85-41 and 85-42: April 22, 1985.

FOR FURTHER INFORMATION CONTACT: Wendy Cleland-Hamnett, Chemical Control Division (TS-794), Office of Toxic Substances, Environmental Protection Agency, Rm. E-611, 401 M St., SW., Washington, DC 20460, (202-382-3725).

SUPPLEMENTARY INFORMATION: A nonsubstantive change in the prefixes is being initiated for information published under sections 5(d)(2) and 5(h)(6) of TSCA. The notices will contain essentially the same information but the prefixes to the specific number assignment will appear in an abbreviated form. Prefixes under the modified format will use the letters "Y" (POLYMER EXEMPTION), "P" (PMN) and "T" (TMEA). The following notice contains information extracted from the non-confidential version of the submission by the manufacturer on the exemption received by EPA. The complete non-confidential document is available in the Public Reading Room E-107 at the above address between 8:00 a.m. and 4:00 p.m., Monday through Friday, excluding legal holidays.

Y 85-36

Manufacturer. Confidential.
Chemical. (G) Acrylamide-acrylic acid terpolymer, mixed sodium ammonium salt.
Use/Production. (G) Thickener. Prod. range: Confidential.
Toxicity Data. No data sumbitted.
Exposure. No data submitted.
Environmental Release/Disposal. No data submitted.

Y 85-37

Manufacturer. Confidential.
Chemical. (G) Acrylamide-acrylic acid terpolymer, sodium salt.
Use/Production. (G) Thickener. Prod. range: Confidential.
Toxicity Data. No data submitted.
Exposure. No data submitted.
Environmental Release/Disposal. No data submitted.

Y 85-38

Manufacturer. Confidential.
Chemical. (G) Polyester polyurethane.
Use/Production. (G) Industrial coating component. Prod. range: 50,000-150,000 kg/yr.
Toxicity Data. No data submitted.
Exposure. No data submitted.
Environmental Release/Disposal. No data submitted.

Y 85-39

Manufacturer. Reichhold Chemicals, Inc.
Chemical. (G) Polyester polymer.
Use/Production. (S) Industrial coating vehicle. Prod. range: 500,000-2,000,000 kg/yr.
Toxicity Data. No data submitted.
Exposure. No data submitted.
Environmental Release/Disposal. No data submitted.

Y 85-40

Manufacturer. Confidential.
Chemical. (G) Polyester polyol.
Use/Production. (S) Industrial coating resin component. Prod. range: 22,000-27,000 kg/yr.
Toxicity Data. No data submitted.
Exposure. No data submitted.
Environmental Release/Disposal. No data submitted.

Y 85-41

Manufacturer. Confidential.
Chemical. (G) Unsaturated polyester.
Use/Production. (S) Industrial thermoset plastic molding resin. Prod. range: 71,000-295,000 kg/yr.
Toxicity Data. No data submitted.
Exposure. No data submitted.
Environmental Release/Disposal. No data submitted.

Y 85-42

Manufacturer. Confidential.
Chemical. (G) Alkyd resin.
Use/Production. (S) Industrial high solids coating resin component. Prod. range: 16,500-82,000 kg/yr.
Toxicity Data. No data submitted.
Exposure. No data submitted.
Environmental Release/Disposal. No data submitted.

Dated: April 8, 1985.

V. Paul Fuschini,

Acting Director, Information Management Division.

[FR Doc. 85-8823 Filed 4-11-85; 8:45 am]

BILLING CODE 6560-50-M

[OPP-180672; FRL-2816-5]

Minnesota Department of Agriculture; Receipt of Application for Emergency Exemption to Use 2-Methoxy-N-(2-oxo-1,3-Oxazolin-3-yl)-Acet-2', 6'-Xylidine; Solicitation of Public Comment

AGENCY: Environmental Protection Agency.

ACTION: Notice.

SUMMARY: EPA has received a request for an emergency exemption from the Minnesota Department of Agriculture (hereafter referred to as the "Applicant") to use the active ingredient 2-methoxy-N-(2-oxo-1,3-oxazolin-3-yl)-acet-2',6'-xylidine, [Oxadixyl, ISO Approved; formulated by Gustafson Corp. as Anchor 25% Dust Fungicide] to control downy mildew on 156,000 acres of sunflowers in Minnesota. It is the Agency's policy to solicit public comment on applications involving active ingredients which have no registered end uses. Accordingly, EPA is soliciting comment before making the decision whether or not to grant the exemption. Date: Comments must be received on or before April 29, 1985.

ADDRESS: Three copies of written comments, bearing the identifying notation "OPP-180672," should be submitted by mail to:

Information Services Section, Program Management and Support Division (TS-757C), Office of Pesticide Programs, Environmental Protection Agency, 401 M Street SW., Washington, D.C. 20460

In person, bring comments to: Rm. 236, CM#2, 1921 Jefferson Davis Highway, Arlington, VA.

Information submitted in any comment concerning this notice may be claimed confidential by marking any part or all of that information as "Confidential Business Information (CBI)." Information so marked will not be disclosed except in accordance with procedures set forth in 40 CFR Part 2. A copy of the comment that does not contain CBI must be submitted for inclusion in the public record. Information not marked confidential

may be disclosed publicly by EPA without prior notice to the submitter. All written comments will be available for inspection in Rm. 236 at the address given above from 8 a.m. to 4 p.m., Monday through Friday, excluding legal holidays.

FOR FURTHER INFORMATION CONTACT:

By mail: Libby Welch, Registration Division (TS-767C), Office of Pesticide Programs, Environmental Protection Agency, 401 M Street SW., Washington, D.C. 20460

Office location and telephone number: Rm. 716A, Crystal Mall 2, 1921 Jefferson Davis Highway, Arlington, VA (703-557-1192).

SUPPLEMENTARY INFORMATION: Pursuant to section 18 of the Federal Insecticide, Fungicide, and Rodenticide Act (FIFRA) (17 U.S.C. 136p), the Administrator may, at his discretion, exempt a State agency from any provision of FIFRA if he determines that emergency conditions exist which require such exemption.

The Applicant has requested the Administrator to issue a specific exemption to permit the use of 2-methoxy-N-(2-oxo-1,3-oxazolin-3-yl)-acet-2',6'-xylidine), available as Anchor 25% Dust Fungicide from Gustafson Corp., to control downy mildew caused by the *Plasmopara halstedii* on 156,500 acres of sunflowers grown in Minnesota. Information in accordance with 40 CFR Part 166 was submitted as part of this request.

The Applicant indicates that downy mildew is not adequately controlled by existing cultural methods or registered pesticides, and all commercial sunflower hybirds are susceptible to the new race of downy mildew found in 1981.

The Applicant indicates that the only two fungicides which are currently registered for use on sunflowers are Maneb and Captan. The Applicant indicates that research shows they are not effective as downy mildew control agents. Specific exemptions were issued in 1982, 1983, and 1984 for use of metalaxyl to control downy mildew in sunflowers. At this time the Agency will not entertain a request for this use of metalaxyl. The Applicant estimates the crop value of 156,500 acres of sunflowers to be $20,658,000. The Applicant states that yield reductions caused by downy mildew will reach 1.5%. Thus the economic benefit, based on information provided by the Applicant, from the use of Anchor would be a total of $309,870.

Anchor will be applied at a maximum rate of 1.0 ounce of active ingredient per hundred weight of seed. A maximum of one application will be made. A total of 39,125 pounds of active ingredient will be required to treat the seed necessary to plant 156,500 acres of sunflowers. Anchor will be applied by individual growers at time of planting. Applications would be made from April 20 through July 1, 1985.

This notice does not constitute a decision by EPA on the application itself. Interested persons may submit written views on this subject to the Program Management and Support Division at the address above. The comments must be received on or before April 29, 1985, and should bear the identifying notation "OPP 180672." All written comments filed pursuant to this notice will be available for public inspection in Rm. 236, Crystal Mall No. 2 at the address given above, from 8 a.m. to 4 p.m., Monday through Friday, except legal holidays.

The Agency, accordingly, will review and consider all comments received during the comment period in determining whether to issue the emergency exemption requested by Minnesota.

Dated: April 3, 1985.

Douglas D. Campt,

Director, Registration Division.

[FR Doc. 85-8829 Filed 4-11-85; 8:45 am]

BILLING CODE 6560-50-M

[OPP-180673; FRL-2816-4]

Minnesota Department of Agriculture; Receipt of Application for Specific Exemption To Use 1-[[2-(2,4-Dichlorophenyl)-4-Propyl-1,3-Dioxolan-2-YL[Methyl]-1H-1,2,4-Triazole; Solicitation of Public Comment

AGENCY: Environmental Protection Agency (EPA).

ACTION: Notice.

SUMMARY: EPA has received a request for an emergency exemption from the Minnesota Department of Agriculture (hereafter referred to as the "Applicant") for a specific exemption to use the active ingredient 1-[[2-(2,4-dichlorophenyl)-4-propyl-1,3dioxolan-2-yl]methyl]-1*H*-1,2,4-triazole (Tilt, EPA Reg. No. 100-617) to control brown spot caused by *Bipolaris oryzae* on 22,000 acres of wild rice in Minnesota. It is the Agency's policy to solicit public comment on applications involving active ingredients which have not been previously registered for a food or feed use. Accordingly, EPA is soliciting comment before making the decision whether or not to grant the specific exemption.

DATE: Comments must be received on or before April 29, 1985.

ADDRESS: Three copies of written comments, bearing the identifying notation "OPP-180673," should be submitted by mail to:

Information Services Section, Program Management and Support Division (TS-757C), Office of Pesticide Programs, Environmental Protection Agency, 401 M Street SW., Washington DC 20460

In person, bring comments to: Rm. 236, CM#2, 1921 Jefferson Davis Highway, Arlington, VA.

Information submitted in any comment concerning this notice may be claimed confidential by marking any part or all of that information as "Confidential Business Information (CBI)." Information so marked will not be disclosed except in accordance with procedures set forth in 40 CFR Part 2. A copy of the comment that does not contain CBI must be submitted for inclusion in the public record. Information not marked confidential may be disclosed publicly by EPA without prior notice to the submitter. All written comments will be available for inspection in Rm. 236 at the address given above from 8 a.m. to 4 p.m., Monday through Friday, excluding legal holidays.

FOR FURTHER INFORMATION:

By mail: Libby Welch, Registration Division (TS-767C), Office of Pesticide Programs, Environmental Protection Agency, 401 M Street SW., Washington, DC 20460

Office location and telephone number: Rm. 716, Crystal Mall 2, 1921 Jefferson Davis Highway, Arlington, VA (703-557-1192).

SUPPLEMENTARY INFORMATION: Pursuant to section 18 of the Federal Insecticide, Fungicide, and Rodenticide Act (FIFRA) (17 U.S.C. 136p), the Administrator may, at his discretion, exempt a State agency from any registration provision of FIFRA if he determines that emergency conditions exist which require such exemption.

The Applicant has requested the Administrator to issue a specific exemption to permit the use of 1-[[2-(2,4-dichloropheny l)-4-prophyl-1,3-dioxolan-2-yl]methyl)-1*H*-1,2,4-triazole, available as Tilt (EPA Reg. No. 100-617) from Ciba-Geigy, to control brown spot cause by *Bipolaris oryzae* on 22,000 acres of wild rice grown throughout Minnesota. Tilt is currently only registered on grasses grown for seed. Information in accordance with 40 CFR Part 166 was submitted as part of this request.

According to the Applicant, the recorded incidence of brown spot has occurred annually since 1971 and has

severely reduced yields throughout the State, up to 100% in some instances. The organism can be disseminated by the physical movement of infested soil and/or infected plant debris, wind and infected wild rice seed.

The Applicant predicts that this disease situation will continue and even worsen because of the following factors: (1) Resistant wild rice varieties are currently unavailable and none are anticipated within the near future; (2) the pathogen abounds on the various wild grasses and cultivated cereals found throughout the wild rice growing areas; (3) crop residue destruction by burning or deep plowing has not been effective in controlling this disease; (4) Dithane M-45 is currently labeled for control of brown spot. The Applicant states that published reports of the ability of *Bipolaris oryzae* to become adapted to higher than recommended field rates of Dithane M-45 have been scientifically reported; (5) environmental conditions favoring epidemic development also prevent timely application of Dithane M-45. It is estimated that treatment of affected acreage with Tilt in 1985 could save the Minnesota wild rice industry between 4 and 12 million dollars.

Tilt will be applied at a rate of 75 grams active ingredient at the boot stage of plant development if lesions are present. If disease progress is still evident an additional application at flowering will be required. If the disease does not occur until late boot heading only one application at 100 grams active ingredient per acre will be made. A total of 7,300 pounds of active ingredient will be needed to treat 22,000 acres of wild rice. Applications will be by air. Applications would be made from July 1 through August 31, 1985.

This notice does not constitute a decision by EPA on the application itself. Interested persons may submit written views on this subject to the Program Management and Support Division at the address above. The comments must be received on or before April 29, 1985, and should bear the identifying notation "OPP/80673." All written comments filed pursuant to this notice will be available for public inspection in Rm. 236, Crystal Mall No. 2, at the address given above, from 8:00 a.m. to 4:00 p.m., Monday through Friday, except legal holidays.

The Agency, accordingly, will review and consider all comments received during the comment period in determining whether to issue the emergency exeption requested by Minnesota.

Dated: April 3, 1985.

Douglas D. Campt,

Director, Registration Division.

[FR Doc. 85-8830 Filed 4-11-85; 8:45 am]

BILLING CODE 6560-50-M

[ER-FRL-2817-2]

Environmental Impact Statements and Regulations; Availability of EPA Comments

Availability of EPA comments prepared March 25, 1985 through March 29, 1985 pursuant to the Environmental Review Process (ERP), under Section 309 of the Clean Air Act and Section 102(2)(c) of the National Environmental Policy Act as amended. Requests for copies of EPA comments can be directed to the Office of Federal Activities at (202) 382-5075/76. An explanation of the ratings assigned to draft environmental impact statements (EISs) was published in FR dated October 19, 1984 (49 FR 41108).

Draft EISs

ERP No. D-AFS-D65011-WV, Rating EC2, Monongahela Nat'l Forest, Land and Resource Mgmt. Plan, WV. SUMMARY: EPA believes that the program as planned, places insufficient emphasis on maintenance of water quality in the watershed. EPA believes that the combined effects of timbering and mining could seriously and cumulatively impact the watershed's water quality without appropriate mitigation.

ERP No. D-FHW-E40683-NC, Rating EC2, NC-280 Construction, NC-280 and NC-191 Intersection, Mills R. to I-26 near Asheville Airport, NC. SUMMARY: EPA believes that the DEIS alternative analysis should be more inclusive. EPA also requested that the implementation of noise abatement measures be reconsidered and that additional habitat impact information is needed.

Final EISs

ERP No. F-OSM-L67014-WA, John Henry No. 1 Mine Operation, Permit, WA. SUMMARY: EPA believes that the program as planned, places insufficient emphasis on maintenance of water quality in the watershed. EPA believes that the combined effects of timbering and mining could seriously and cumulatively impact the watershed's water quality without appropriate mitigation.

Dated: April 9, 1985

Allan Hirsch,

Director, Office of Federal Activities.

[FR Doc. 85-8912 Filed 4-11-85; 8:45 am]

BILLING CODE 6560-50-M

[ER-FRL-2817-1]

Environmental Impact Statements; Notice of Availability

Responsible Agency: Office of Federal Activities, General Information (202) 382-5073 or (202) 382-5075. Availability of Environmenal Impact Statements filed April 1, 1985 through April 5, 1985 Pursuant to 40 CFR 1506.9.

EIS No. 850129, FSuppl, COE, LA, New Orleans to Venice Hurricane Protection Project, Plaquemines Parish, Due: May 13, 1985, Contact: Scott Clark (504) 838-2521.

EIS No. 850130, Final, NOA, PAC, North Pacific Fur Seals Conservation, Interim Convention, Extension, Due: May 13, 1985, Contact: Richard Roe (202) 634-7461.

EIS No. 850131, Final, FHW, CA, CA-52 Construction, I-805 to Santo Road, San Diego County, Due: May 13, 1985, Contact: Mike Pool (916) 440-2521.

EIS No. 850132, Final FHW, AL, Tallahaga Scenic Drive Completion, Bulls Gap to Piedmont, Tallahaga NF, Due: May 13, 1985, Contact: Martin Convisser (202) 426-4357.

EIS No. 850133, DSuppl, COE, TX, Lake Wichita-Holiday Creek Flood Control Plan, Wichita Falls, Wichita County, Due: May 28, 1985, Contact: Buell Atkins (918) 581-7857.

EIS No. 850134, Draft, AFS, AL, Alabama National Forests, Land and Resource Management Plan, Due: July 11, 1985, Contact: Joe J. Brown (205) 832-7630.

EIS No. 850135, Draft, SCS, LA, Bayou Mallet Watershed Flood Prevention Project, Mermentau River Basin, Acadia, St. Landry, and Evangeline Parishes, Due: May 31, 1985, Contact: Harry Rucker (318) 473-7751.

EIS No. 850136, Draft, COE, PA, Francis E. Walter Dam Modifications, Lehigh River, Delaware River Basin, Carbon, Luzenne and Monroe Counties, Due: May 28, 1985, Contact: Jeffrey Radley (215) 597-4833.

EIS No. 850137, Draft, BLM, OR, Two Rivers Planning Area, Resource Management Plan, Prinville District, Due: June 30, 1985, Contact: Brian Cunninghame (503) 447-4115.

EIS No. 850138, Final, FHW, OR, South Slough (Charleston) Bridge Replacement, Cape Arago Highway, Coos County, Due: May 13, 1985, Contact: Dale Wilken (503) 399-5749.

EIS No. 850139, Final, SFW, AK, Kenai National Wildlife Refuge, Conservation Management Plan, Kenai Peninsula Borough, Due: May 13, 1985, Contact: William Knauer (907) 786-3399.

EIS No. 850140, Draft, BLM, WY, Kemmerer Resource Area, Resource Management Plan, Due: July 12, 1985, Contact: Alan Stein (307) 382-5350.

Amended Notice: EIS No. 850010, DRevised, AFS, MT, Beaverhead National Forest Land and Resource Management Plan, Due: June 1, 1985, Published FR 2-15-85 Review extended.

Dated: April 9, 1985.

Allan Hirsch,

Director, Office of Federal Activities.

[FR Doc. 85-8913 Filed 4-11-84; 8:45 am]

BILLING CODE 6560-50-M

FEDERAL COMMUNICATIONS COMMISSION

Information Collection Requirements Approved by OMB

April 4, 1985.

The following information collection requirements have been approved by the Office of Management and Budget. For further information contact Doris Peacock, FCC, (202) 632-7513.

OMB No.: 3060-0003

Title: Application for Amateur Radio Station and/or Operator License

Form No.: FCC 610

A revised application form FCC 610 has been approved for use through 3/31/88. The June 1984 edition with the previous expiration date of 5/31/87 will remain in use until revised forms are available. In the meantime, Volunteer Examiners may follow modified instructions as published in the **Federal Register** of February 1, 1985 (50 FR 4686).

OMB No.: 3060-0016

Title: Application for Authority to Construct or Make Changes in a Low Power TV, TV Translator or FM Translator Station

Form No.: FCC 346

A revised application form FCC 346 has been approved for use through 1/31/88. The July 1983 edition with the previous expiration date of 7/31/84 (which was extended to 7/31/87) will remain in use until revised forms are available. At that time all previous editions will be declared obsolete.

OMB No.: 3060-0035

Title: Application for Renewal of Auxiliary Broadcast License (Short Form)

Form No.: FCC 313-R

The approval on FCC 313-R has been extended through 3/31/88. The September 1982 edition with the previous expiration date of 4/31/85 will remain in use until updated forms are available.

OMB No.: 3060-0069

Title: Application for Commercial Radio Operator License

Form No.: FCC 756

A rivised application form FCC 756 has been approved for use through 3/31/88. The November 1984 edition with a previous expiration date of 12/31/85 will remain in use until revised forms are available. At that time all previous editions will be declared obsolete.

William J. Tricarico,

Secretary, Federal Communications Commission.

[FR Doc. 85-8891 Filed 4-11-85; 8:45 am]

BILLING CODE 6712-01-M

Roanoke TV 60 Broadcasting et al.; Hearing Designation Order

In re applications of Wilbur O. Colom, et al., d/b/a Roanoke TV 60 Broadcasting, MM Docket No. 85-86; Southwest Virginia Television, File No. BPCT-840803KG; for Construction Permit for New Television Station Roanoke, Virginia, File No. BPCT-841005KY.

Adopted: March 21, 1985.

Released: April 5, 1985.

By the Chief, Video Services Division.

1. The Commission, by the Chief, Video Services Division, acting pursuant to delegated authority, has before it the above-captioned mutually exclusive applications of Wilbur O. Colom, Congress Street Properties, Inc., Willis M. Anderson, and Dr. Wendell H. Butler, d/b/a Roanoke TV 60 Broadcasting (TV 60) [1] and Southwest Virginia Television (Southwest) for authority to construct a new commercial television station on Channel 60, Roanoke, Virginia.

2. No determination has been made that the tower height and location proposed by each of the applicants would not constitute a hazard to air navigation. Accordingly, an appropriate issue will be specified.

3. On November 21, 1984, the Association of Maximum Service Telecasters, Inc. filed an informal objection to the application of Southwest [2] on the ground that the proposed transmitter site was short-spaced by 4.29 miles to Station WNRW(TV), Channel 45, Winston-Salem, North Carolina. On December 19, 1984, Southwest filed a "petition for leave to amend" accompanied by an amendment changing its antenna site to a location which meets the Commission's minimum mileage separation requirements. For good cause shown, the petition is granted and the amendment is accepted. The informal objection will be dismissed as moot.

4. Section V-C, Item 10, FCC Form 301, requires that an applicant submit the area and population within its predicted Grade B contour. Southwest has not submitted this information. Consequently, we are unable to determine whether there would be a significant difference in the size of the area and population that each applicant proposes to serve. Southwest will be required to submit an amendment showing the required information, within 20 days after this Order is released, to the presiding Administrative Law Judge. If it is determined that there is a significant disparity between the areas and populations, the presiding Administrative Law Judge will consider it under the standard comparative issue.

5. Except as indicated by the issues specified below, the applicants are qualified to construct and operate as proposed. Since these applications are mutually exclusive, the Commission is unable to make the statutory finding that their grant would serve the public interest, convenience, and necessity. Therefore, the applications must be designated for hearing in a consolidated proceeding on the issues specified below.

6. Accordingly, it is ordered, That pursuant to section 309(e) of the Communications Act of 1934, as amended, the applications are designated for hearing in a consolidated proceeding, to be held before an Administrative Law Judge at a time and place to be specified in a subsequent Order, upon the following isues:

1. To determine whether there is a reasonable possibility that the tower height and location proposed by each applicant would constitute a hazard to air navigation.

2. To determine which of the proposals would, on a comparative basis, better serve the public interest.

3. To determine, in light of the evidence adduced pursuant to the foregoing issues, which of the applications should be granted.

7. It is further ordered That, the Federal Aviation Administration is made a party respondent to this proceeding with respect to Issue 1.

8. It is further ordered, That the informal objection filed by the Association of Maximum Service Telecasters, Inc. is dismissed as moot.

9. It is further ordered, That to avail themselves of the opportunity to be

[1] On March 5, 1985, TV 60 petitioned for leave to amend and to clarify a previous amendment relating to equity ownership. Since the amendment was filed in response to the Commission's request, it will be accepted. See § 73.3514(b) of the Commission's Rules. No comparative advantage will be permitted, however.

[2] This objection also included the application of Brahman Communications. The Brahman Communications application was returned as unacceptable for filing on February 26, 1985.

heard, the appliants and the party respondent herein shall, pursuant to § 1.221(c) of the Commission's Rules, in person or by attorney, within 20 days of the mailing of this Order, file with the Commission, in triplicate, a written appearance stating an intention to appear on the date fixed for the hearing and present evidence on the issues specified in this Order.

10. It is further ordered, That the applications herein shall, pursuant to section 311(a)(2) of the Communications Act of 1934, as amended, and § 73.3594 of the Commisison's Rules, give notice of the hearing within the time and in the manner prescribed in such Rule, and shall advise the Commission of the publication of such notice as required by § 73.3594(g) of the Rules.

Federal Communications Commission.

Roy J. Stewart,

Chief, Video Services Division, Mass Media Bureau.

[FR Doc. 85-8894 Filed 4-11-84; 8:45 am]

BILLING CODE 6712-01-M

Arkelian Broadcasting Co. and Benitez Communications, Inc.; Hearing Designation and Order

In re applications of Arkelian Broadcasting Company WWWO, Marco Island, FL.; Has: 1510 kHz, 1 kW, DA-D, D, Req: 1480 kHz, 1 kW, DA-2, U MM DOCKET NO. 85-85, File No. BP-840217AA. Benitez Communications, Inc. East Naples, Florida; Req: 1460 kHz, 0.5 kW, D; File No. BP-840702AI.

Adopted: March 22, 1985.

Released: April 5, 1985.

By the Chief, Mass Media Bureau.

1. The Commission, by the Chief, Mass Media Bureau, acting pursuant to delegated authority, has under consideration the above-captioned mutually exclusive applications of Arkelian Broadcasting Company (Arkelian) and Benitez Communications, Inc. (Benitez). Also before the Commission is a motion to dismiss Benitez's application filed by Arkelian, related pleadings, and a petition for leave to amend filed by Benitez.

2. The date until which Benitez could file amendments to its application as a matter of right (B cut-off date) was November 27, 1984. On December 11, 1984, Benitez submitted an amended engineering statement, requesting a waiver of § 73.37 of the Commission's Rules, accompanied by a petition for leave to amend. This amendment is unopposed and will not prejudice the other applicant nor confer any comparative advantage to Benitez. We therefore will accept the amendment.

3. Arkelian filed a motion to dismiss Benitez's application, alleging that the proposal submitted by Benitez would result in prohibited overlap of its proposed 0.5 mV/m contour with the 0.5 mV/m contour of first adjacent Station WSPB, Sarasota, Florida, in violation of Section 73.37(a) of the Commission's Rules. While Arkelian's contention is correct, we have determined that a waiver of § 73.37(a) is warranted. A waiver of § 73.37(a) is granted to Benitez, *infra*, in paragraph 4 of this Order, thus rendering Arkelian's argument moot. Accordingly, we will deny Arkelian's motion to dismiss.

4. Benitez has requested a waiver of § 73.37(a) to permit overlap with the existing 0.5 mV/m contour of Station WSPB, Sarasota, Florida. The proposed overlap is caused by the high conductivity of salt water paths, and occurs exclusive offshore, beyond the normal mainland service contours of both stations. In view of the unique circumstances involved, we find that the overlap which would occur would not prejudice the basic policy considerations underlying the provisions of § 73.37(a) of the Rules. Accordingly, a waiver is granted to Benitez to permit acceptance of its proposal.

5. Arkelian has requested a waiver of § 73.37(b)(2) of the Rules, to permit Station WWWO to receive overlap to its proposed 1 mV/m contour. This overlap is *de minimus* and is the result of the high conductivity of salt water paths. *See, Larson-Irwin Enterprises (KOAG)*, 6 F.C.C. 2d 613 (1967); *see also, Collier Broadcasting Co.*, 25 F.C.C. 2d 867 (1970). Accordingly, a waiver is granted to Arkelian.

6. Except as indicated by the issues specified below the applicants are qualified to construct and operate as proposed.[1] However, since the proposals are mutually exclusive, they must be designated for hearing in a consolidated proceeding. As the proposals are for different communities, we will specify issues to determine pursuant to Section 307(b) of the Communications Act of 1934, as amended, which proposal would best provide a fair, efficient and equitable distribution of radio service. We will also specify a contingent comparative issue, should such an evaluation of the proposals prove warranted.

7. Accordingly, it is ordered, That pursuant to Section 309(e) of the Communications Act of 1934, as amended, the applications are designated for hearig in a consolidated proceeding, to be held before an Administrative Law Judge at a time and place to be specified in a subsequent Order, upon the following issues:

1. To determine: (a) the areas and populations which would receive primary aural service from the proposal of Benitez Communications, Inc., and the availability of other primary service to such areas and populations, (b) the areas and populations which would gain or lose primary aural service from the proposal of Arkelian Broadcasting Company and the availability of other primary service to such areas and populations, and (c) in light thereof and pursuant to Section 307(b) of the Communications Act of 1934, as amended, which of the proposals would better provide a fair, efficient and equitable distribution of radio service.

2. To determine in the event that a choice between the applicants should not be based solely on considerations relating to Section 307(b), which of the proposals would, on a comparative basis, better serve the public interest.

3. To determine in light of the evidence adduced pursuant to the foregoing issues, which of the applications should be granted.

8. It is further ordered, That the petition for leave to amend filed by Benitez Communications, Inc. is granted and the accompanying amendment is accepted for filing.

9. It is further ordered, That the motion to dismiss filed by Arkelian Broadcasting Company is denied.

10. It is further ordered, That § 73.37(a) of the Commission's Rules is waived on behalf of Benitez Communications, Inc.

11. It is further ordered, That § 73.37(b) of the Commission's Rules is waived on behalf of Arkelian Broadcasting Company.

12. It is further ordered, That in addition to the copy served on the Chief, Hearing Branch, a copy of each amendment filed in this proceeding subsequent to the date of adoption of this Order shall be served on the Chief, Data Management Staff, Audio Services Division, Mass Media Bureau, Room 350, 1919 M Street, NW., Washington, D.C. 20554.

13. It is further ordered, That to avail themselves of the opportunity to be heard and pursuant to Section 1.221(c) of the Commission's Rules, the parties shall within 20 days of the mailing of this Order, in person or by attorney, file with the Commission in triplicate a written appearance stating an intention

[1] The facilities specified by Arkelian Broadcasting Company herein are subject to modification, suspension or termination without right of hearing, if found by the Commission to be necessary in order to conform to the Final Acts of the ITU Administrative Conference on Medium Frequency Broadcasting in Region 2, Rio de Janerio 1981, and to bilateral and other multilateral agreements between the United States and other countries.

to appear on the date fixed for hearing and to present evidence on the issues specified in this Order.

14. It is further ordered, That pursuant to Section 311(a)(2) of the Communications Act of 1934, as amended, and § 73.3594 of the Commission's Rules, the applicants shall give notice of the hearing as prescribed in such Rules, and shall advise the Commission of the publication of such notice as required by § 73.3594(g) of the rules.

Federal Communications Commission.

W. Jan Gay,

Assistant Chief, Audio Services Division, Mass Media Bureau.

[FR Doc. 85-8886 Filed 4-11-85; 8:45 am]

BILLING CODE 6712-01-M

[Gen. Docket No. 84-607]

Advisory Committee for the World Administrative Radio Conference for the Mobile Services; Establishment

Adopted: February 22, 1985.

Released: March 29, 1985.

By the Commission:

Purpose

1. The purpose of this *Memorandum Opinion and Order* is to establish a federal advisory committee to prepare for the International Telecommunication Union (ITU) World Administrative Radio Conference (WARC) for the Mobile Services. This conference is anticipated to be held in 1987. A Commission proceeding has been established to assist our preparations for the Mobile Services WARC.[1] the maintenance of an advisory committee would be an adjunct to that proceeding.

Background

2. Although the detailed agenda for the Mobile Services WARC has not been established by the ITU, the Conference is expected to have jurisdiction to consider and revise many of the provisions of the international Radio Regulations pertaining to the use of radio by the mobile services. Thus, a thorough preparatory review and assessment of United States options of the conference is necessary. It is particularly critical that the process begin expeditiously. There are large sections of the Radio Regulations devoted exclusively to Mobile Services, and significant portions devoted both to Mobile and non-Mobile Services. To accomplish a review of this magnitude will require extensive effort to ensure that all U.S. interests have been adequately examined prior to our submission of U.S. proposals to the Conference. We anticipate that proposals will be due in Geneva about January 1, 1987, based on an August, 1987, start of the conference.

Establishment of a Federal Advisory Committee

3. There are several means whereby the Commission and Executive Branch can develop policies for international organizations considering communication issues. One means is through the creation of an advisory committee consisting of members of the public having a knowledge of and interest in the subject matter.[2] Such committees generally meet at regular intervals with advance notice of meetings given in the **Federal Register**, affording an opportuntiy for members to research and discuss relevant issues, and to develop findings or recommendations. All of these activities are governed by the Federal Advisory Committee Act of 1972.[3]

4. In view of the utility that such an advisory committee could provide, the Commission solicited comments regarding the desirabiity of creating an advisory committee for the Mobile Services WARC in the First Notice of Inquiry in this proceeding.[4] Five of the commenters supported the need for, or indicated a desire to participate in, any mechanism that might be established to promote more detailed interface with the public on matters that may be considered at the WARC. One of the reply comments also encouraged the establishment of such a committee. The remaining 5 commenters and 2 reply comments voiced no opinion one way or the other.

5. American Telephone and Telegraph Company (AT&T) supported the need for an advisory committee, particulary to collect usage data concerning the HF maritime mobile service. The Association of American Railroads (AAR) indicated that an advisory committee could provide the necessary public interface with the Commission. Mobile Marine Radio, Incorporated, indicated that it will assist, as appropriate, in the preparatory efforts. The Radio Technical Commission for Maritime Services (RTCM) indicated that there is merit in utilizing the expertise of advisory committees because this normally provides for an improved dialogue between the Commission and all interested parties. Like AT&T, RTCM also believes that the collection of HF maritime mobile data through an advisory committee is particularly desirable. RCA Global Communications (RCA) indicated that the FCC should consult with the RTCM in preparing for the 1987 WARC. Aeronautical Radio, Incorporated (ARINC), in its reply comments, supported the formation of an industry advisory committee, believing that such a committee could have merit in developing the United States proposals for the WARC.

6. From the comments filed there is an indication that the creation of an advisory committee would provide the opportunity for a thorough examination of the issues and result in a more focused preparatory process. There are, of course, other domestic forums focusing upon Mobile WARC matters. The Interdepartment Radio Advisory Committee has established Ad Hoc 194 to develop recommendations for the National Telecommunications and Information Administration (NTIA). Recommendations developed by this group will be primarily centered on Federal agency spectrum management interests. The public has no direct access or involvement in its activities. The National Committee of the CCIR, primarily through its United States Study Group-8 effort, will continue its on-going examination and development of technical and operational bases for the mobile services. United States Coast Guard, through its Safety-of-Life-at-Sea (SOLAS) Working Group on Radiocommunications of the International Maritime Organization (IMO) will address matters as they relate to safety and distress in that forum. We also expect the Federal Aviation Administration to develop some mechanism to prepare for meetings within the International Civil Aviation Organization (ICAO) forum. We would further expect that associations and other domestic groups representing operators, manufacturers, and users will also develop some form of preparatory mechanisms.[5]

---

[1] See *First Notice of Inquiry*, (General Docket No. 84-607), FCC 84-262, 49 FR 26301, adopted June 15, 1984, published June 27, 1984.

[2] The Commission has used this method in the past in preparing for international radio conferences. Most recently, a federal advisory committee was created to prepare for the ITU WARC on the Use of the Geostationary-Satellite Orbit and the Planning of the Space Services Utilizing It (Space WARC). See *Memorandum Opinion and Order*, General Docket No. 80-741, FCC 81-317, 46 FR 42758, adopted July 16, 1981.

[3] Federal Advisory Committee Act, Pub. L. 92-463, October 6, 1972, 86 Stat. 770, as amended Pub. L. 94-409, sec. 5(c), September 13, 1976, 90 Stat. 1247 at sec. 3(c). The Act appears at 5 U.S.C. App. I (1976).

[4] *First Notice of Inquiry, supra* at [1].

[5] We note that the Radio Technical Commission for Maritime Services has created Special

Continued

7. In addition to these activities, there are a number of on-going separate Commission domestic proceedings that are relevant to the Mobile WARC preparatory process. For example, the recent adoption of the *Notice of Proposed Rule Making* concerning allocation of spectrum and establishment of rules pertaining to the radiodetermination-satellite service will have a bearing on this process.[6] Another example is the *NPRM* in the mobile satellite area.[7] Still yet another example is the on-going Space WARC preparatory activities, as correctly pointed out by the American Telephone and Telegraph Company in its comments to the *Notice*.[8] Those activities, and the results of the first session of the Space WARC In 1985 concerning the mobile-satellite services, will have to be considered.

8. As suggested by the commenters, a central or principal forum is needed to provide for an interaction among the various groups identified above so that a set of comprehensive and cohesive ideas might be developed to assist the Commission in preparing for the 1987 Mobil WARC. By this *Order* the Commission now establishes such a committee. This committee is intended to bring together a broad range of individuals who are knowledgeable in the issues that the Mobile WARC will consider. Although the committee cannot formally exercise any authority over the advisory committees of other agencies, we expect that a useful interaction will take place. We particularly envision that any output from such groups as RTCM will be presented and coordinated through the advisory group.

9. The broad activities of the committee are set forth in the Charter attached as Appendix 1. It indicates that the work product should be produced in three steps. The first step would be a recommendation to the Commission on the issues that should be addressed by the Mobile Service WARC. Emphasis would be on the mobile service uses and requirements through the 1987–2000 time-frame and the impact of consideration or non-consideration of these issues at the Mobile WARC. Since this Mobile WARC could have far reaching impact on communications in the mobile and mobile satellite areas for the next twenty years, such an initial effort will assist in developing considerations that will have to be taken into account when the agenda for the Mobile WARC is decided. That decision will probably be made at the ITU Administrative Council in July, 1985.[9] Thus, the first step input from the advisory committee will have to be completed no later than April 1, 1985 in order to provide advice to the FCC in preparing for the Council meeting. It should be in the form of identifying specific Articles, Appendices, and Resolutions/Recommendations of the Radio Regulations and the impact on the United States if those issues are either considered or not considered.

10. The second step of the advisory committee would be to consider recommendations concerning actual changes to the international Radio Regulations that will be part of the 1987 Mobile WARC mandate. Here the emphasis should be on the development of technical, regulatory, operational and frequency ideas and plans, again in a cohesive package intended to satisfy the United States requirements identified in step 1. The studies could also include, as a third step, such matters as economic impact, international ramifications, and so forth. The report on the second and third steps, would be due no later than June 1, 1986. We recognize, however, that the second step is more critical than the third.

11. We expect that the entire Committee will meet no less than three times a year and perhaps more often as the deadline for submission draws closer. Membership on the Committee will not be constrained, although regular dissemination of materials may be limited to regular participants in the Committee's activities, bearing in mind the need for proper balance of interests. It is expected that this Committee will attempt to reach a consensus on as many matters as possible. Where that does not occur, dissenting members will be encouraged to prepare separate comments presenting their view. The Committee will be created, conducted, and terminated pursuant to the Federal Advisory Committee Act of 1972.[10] Advance notice of all Committee meetings will be given to the public through publication in the **Federal Register**. Because funds for the conduct of this Committee are extremely limited, private-sector, i.e., non-government, members of the Committee must cover all their participating expenses.

12. Accordingly, it is ordered that an advisory committee be established to assist the Commission in preparation for the 1987 ITU World Administrative Radio Conference on the Mobile Services. The staff is instructed to take the necessary steps to obtain the prompt approval of the Charter of the Advisory Committee, attached as Appendix 1.

Federal Communications Commission.

William J. Tricarico,

Secretary.

Appendix 1—Charter of the Advisory Committee for the World Administrative Radio Conference for the Mobile Services

A. *The Committee's Official Designation.*

Advisory Committee for the World Administrative Radio Conference for the Mobile Services.

B. *Names of the Subcommittees.*

None.

C. *Committee's Objectives and Scope of its Activity.*

(1) Objective: to advise the staff of the Federal Communications Commission concerning preparations for the International Telecommunication Union World Administrative Radio Conference for the Mobile Services currently scheduled for 1987.

(2) a. Scope of activity on the agenda for the mobile conference: all steps necessary to assemble information and provide advice concerning the following matters:

• Development of a list of ITU Radio Regulation issues that should be addressed by the Mobile WARC, and the potential impact on interests of the United States if those issues either are considered or are not considered.

b. Scope of activity for the United States proposals: all steps necessary to assemble information and provide advice concerning the following matters:

• Development of technical, operational, regulatory and related radio frequency ideas and criteria to meet needs of the United States in a consolidated and cohesive manner, presenting such data in ITU Radio Regulation format.

• The gathering of data and the establishment of agreed parameters to define radio frequency spectrum use and

Committee No. 106; we would anticipate that other such similar entities would do likewise, and that any output from such groups would be channelled through the Mobile WARC Advisory Committee.

[6] *Notice of Proposed Rule Making*, General Docket No. 84-689, and Docket No. 84-690, RM 4428, FCC 84-319, 49 Fed. Reg. 38512, adopted July 12, 1984, published July 12, 1984.

[7] *Notice of Proposed Rule Making*, General Docket No. 84-1234, RM-4247, FCC 84-558.

[8] *Fourth Notice of Inquiry*, General Docket No. 80-741, FCC 84-194, 49 Fed. Reg. 21419, adopted May 10, 1984, published May 21, 1984.

[9] *Notice supra* at [1], paragraph 2.

[10] *Supra* at [3].

requirements, compiling such material into a cohesive recommendation, presenting rationale, alternatives, and ideas for its successful use at the conference.

c. Scope of activity concerning advice for possible use by the United States Delegation: all steps necessary to assemble information and provide advice concerning the following matters:

• An evaluation of the interests of other nations and international organizations that may be involved in preparing for the Mobile WARC.

• An assessment of the impact on mobile terrestrial and satellite radiocommunication services by the various envisioned conference outcomes, including, to the extent determinable, economic and regulatory effects.

D. *Period of Time Necessary for the Committee to Carry Out Its Purposes.*

Final written reports for the activities associated with the development of the Agenda for the Mobile WARC must be completed by April 1, 1985. Final written reports for consideration in developing the United States proposals or use by the United States Delegation must be completed by June 1, 1986.

E. *Official to Whom the Committee Reports.*

Chief, Private Radio Bureau and Chief Scientist Federal Communications Commission.

F. *Agency Responsible for Providing Necessary Support.*

The FCC will furnish necessary administrative support, including the facilities needed for conducting meetings of the Committee.

G. *Description of the Duties for Which the Committee is Responsible.*

The duties of the Committee will be to assemble data and prepare analyses and recommendations concerning the points enumerated in Part C above and to furnish them to the FCC staff.

H. *Estimated Operating Costs in Dollars and Man-years.*

The estimated annual operating costs are $20,000 for the FCC. Estimated man-years are 0.5 for the FCC and 10.0 for private and other government participants.

I. *Estimated Number and Frequency of Committee Meetings.*

The Committee will meet at least 3 times per year.

J. *Committee's Termination Date.*

K. *Date the Charter is Filed.*

[FR Doc. 85-8895 Filed 4-11-85; 8:45 am]

BILLING CODE 6712-01-M

FEDERAL EMERGENCY MANAGEMENT AGENCY

[Docket: FEMA-REP-3-PA-3]

Receipt of Radiological Emergency Response Plans

AGENCY: Federal Emergency Management Agency.

ACTION: Notice of receipt of plans.

SUMMARY: For continued operation of nuclear power plants, the Nuclear Regulatory Commission requires approved licensees and State and local government's radiological emergency response plans. Since FEMA has the responsibility for reviewing the State and local government's plans, the Commonwealth of Pennsylvania has submitted radiological emergency plans to the FEMA Regional Office. These plans support nuclear power plants which impact on Pennsylvania and include the plans of counties which are near the Duquesne Light Company's Beaver Valley Power Station located in Shippingport, Pennsylvania.

DATE PLANS RECEIVED: March 28, 1985.

FOR FURTHER INFORMATION CONTACT: Paul P. Giordano, Regional Director, Federal Emergency Management Agency Region III, Liberty Square Building, 105 South 7th Street, Philadelphia, Pennsylvania 19106.

Notice

In support of the Federal requirement for emergency response plans, FEMA has established a Rule describing its procedures for review and approval of State and local governments' radiological emergency response plans. Pursuant to this FEMA Rule (44 CFR Part 350.8) "Review and Approval of State Radiological Emergency Plans and Preparedness," 48 FR 44338, the Commonwealth of Pennsylvania Disaster Operations Plan, Annex E was received by the Federal Emergency Management Agency Region III Office.

Included are the plans for Beaver County, 27 municipalities, 13 school districts and 4 support counties, which are fully or partially within the plume exposure pathway emergency planning zone of the nuclear plant.

Copies of the Plan are available for review at the FEMA Region III office, or they will be made available upon request in accordance with the fee schedule for FEMA Freedom of Information Act requests, as set out in subpart C of 44 CFR Part 5. There are 2348 pages in the document, reproduction fees are $.10 a page payable with the request for copy.

Comments on the Plan may be submitted in writing to Mr. Paul P. Giordano, Regional Director, at the above address within thirty days of this Federal Register Notice.

Paul P. Giordano,

Regional Director.

[FR Doc. 85-8786 Filed 4-11-85; 8:45 am]

BILLING CODE 6718-01-M

FEDERAL MARITIME COMMISSION

Tariff Rules on Free Time and Detention Applicable to Carrier Equipment Provided to Shippers, Consignees, or Their Draymen; Enlargement of Time To File Replies

By Notice published in the Federal Register on March 12, 1985 (50 FR 9904), the Commission advised of the filing of the subject petition for rulemaking by American President Lines, Ltd. and gave interested parties until April 10, 1985, to reply to the petition. The petition asks the Commission to institute a rulemaking for the purpose of prescribing tariff rules dealing with the use of carrier-provided containers and related equipment by shippers, consignees or others on their behalf.

The Atlantic Regional Committee of the Steamship Operators Intermodal Committee (SOIC) has requested a 60-day enlargement of time to file replies to the petition, describing the common interest of its numerous ocean carrier members in the involved issues, and explaining that more time is necessary for the entire SOIC to examine the significant issues presented so as to arrive at a unified position. Sea-Land Service, Inc. endorses SOIC's motion, citing its considerable interest in this matter and the need for additional time to finalize its position. Sea-Land, however, states that 30 days would be a sufficient extension for its purposes.

An enlargement of time will be granted. Interested persons may submit replies to the petition (original and fifteen copies) on or before May 13, 1985. Replies shall also be served on filing counsel: David B. Cook, Esquire, Shea & Gardner, 1800 Massachusetts Avenue NW., Washington, D.C. 20036.

Bruce A. Dombrowski,

Acting Secretary.

[FR Doc. 85-8799 Filed 4-11-85; 8:45 am]

BILLING CODE 6730-01-M

Automated Tariff Filing and Information System (ATFI); Intent To Form an Advisory Committee

AGENCY: Federal Maritime Commission.

ACTION: Notice of intent to form an Advisory Committee.

SUMMARY: The Commission is considering the establishment of an advisory committee to make continuing recommendations on the implementation of an automated tariff filing and information system. The committee would be comprised of representatives of interests affected by an automated tariff filing and information system, including representatives of conferences, ocean common carriers, non-vessel operating common carriers, ocean freight forwarders, shippers, shippers' associations, ports and transportation support firms.

DATE: Comments and suggestions (original and 15 copies) due within 30 days after publication in the **Federal Register.**

ADDRESS: Comments and suggestions must be mailed to: Bruce A. Dombrowski, Acting Secretary, Federal Maritime Commission, 1100 L Street NW., Washington, D.C. 20573, (202) 523-5725.

FOR FURTHER INFORMATION CONTACT:

Commissioner Edward J. Philbin, Federal Maritime Commission, 1100 L Street NW., Washington, D.C. 20573, (202) 523-5715

John Robert Ewers, Director, Office of Regulatory Overview, 1100 L Street NW., Washington, D.C. 20573, (202) 523-5866.

SUPPLEMENTARY INFORMATION: The Federal Maritime Commission (FMC) is in the conceptual phase of a project to automate its tariff filing functions under the Shipping Act of 1984 (46 U.S.C. app. 1701-1720) and the Intercoastal Shipping Act of 1933 (46 U.S.C. app. 843-848). This project has been designated the Automated Tariff Filing and Information System (ATFI). Key agency officials involved with tariff filing functions and uses have been named to a Policy Steering Committee. Chairman Alan Green, Jr. has appointed Vice Chairman James J. Carey as Chairman of the ATFI Policy Steering Committee and Commissioner Edward J. Philbin as Vice-Chairman of that Committee.

The Committee has drafted a plan of action to accomplish the goal of tariff automation. (Hereinafter referred to as the ATFI Plan.) The ATFI Plan calls for, *inter alia*, the formation of an Advisory Committee comprised of persons representing interests affected by tariff automation to ensure proper evaluation of such a system during its design and implementation phases.

The fundamental goal of the ATFI Plan is the development of a system with the ability to capture, review, process, retrieve and manipulate tariff type information in an automated environment and which is responsive to the needs of the Commission, private sector users and other governmental agencies. Under the Plan the Commission must not only address system requirements and design with respect to ADP hardware and software needs necessary to transfer to electronic media data presently filed in the form of hard-copy tariffs, but also the procurement process, pilot system design, implementation and operation, an estimate of the cost of developing and implementing the system, system phase-in, user education, maintenance and upgrading capability of such a system.

In addition to the mechanics of system design the ATFI Plan also establishes the following policy goals:

1. The automated system is to operate in the private sector.

2. The system is to be financially self-sufficient through the assessment of user charges for access to this information.

3. Access by the Commission is to be without cost.

4. The integrity of this system is to be ensured by the Commission through the development and ownership of software which will control entry into the system.

5. A means is to be constructed to minimize the monopolistic control of any single company operating the system, and efforts shall be made to preserve the existence of satellite companies now commercially engaged in the dissemination of tariff data.

6. Contractual arrangements for electronic filing are not to curtail the public access to tariff documents now routinely made available in public document rooms or otherwise.

7. Contractual arrangements for electronic filing systems are not to interfere with public access under the Freedom of Information Act.

8. The burden imposed upon tariff filers to comply with the technical requirements of filing tariffs in an automated system are to be minimized.

9. The Federal Maritime Commission is to retain final authority to reject filings that do not comply with agency requirements, and to determine the public availability of information pursuant to the Freedom of Information Act and other statutes.

10. The electronic filing system is to be able to maintain historical records that can be retained, retrieved and reproduced for legal evidentiary purposes and to comply with governmental records retention requirements. The study is to recommend appropriate historical records retention periods and methodologies.

11. The electronic filing system is to be designed to prevent unathorized modification or tampering with data yet allow the identification and authorized correction of errors.

12. All fees for the use of the electronic filing system either for filing of documents or retrieval and reproduction of documents are to be reasonable and not deter or impair full public use thereof.

The Commission has concluded that public discussion and recommendations of the foregoing needs and goals by those interests affected by automation of tariff filing during the process of designing and implementing the ATFI Plan is essentail to the success of this effort. Accordingly, the Commission hereby proposes to form an Advisory Committee composed of such interests for that purpose.

It is proposed that in addition to required agency representatives, the Advisory Committee will consist of 15-20 persons representing:

Conferences
Ocean Common Carriers (VOCC's and NVOCC's)
Other Common Carriers
Freight Forwarders
Shippers' Associations
Other Shippers
Ports
Transportation Support Firms

The Commission seeks public comment on the formation of the Advisory Committee including the interests represented, the scope of its functions and the needs of the public that should be addressed. Representatives will serve on the Advisory Committee without compensation but with reimbursement of out-of-pocket expenses directly associated with their participation. Facilities and support staff for the Committee will be provided by the Commission at its offices in Washington, D.C. Meetings of the Committee will be open to the public and a record of the proceedings will be maintained.

Persons wishing to participate in the Advisory Committee should so indicate in their comments and advise as to the interest they wish to represent and why they can adequately represent that interest.

Upon receipt of all comments and requests to participate the Commission will issue a Final Notice of Formation of the Advisory Committee stating the membership and the date and agenda of its first meeting.

By the Commission.

Bruce A. Dombrowski,

Acting Secretary.

[FR Doc. 85-8776 Filed 4-11-85; 8:45 am]

BILLING CODE 6730-01-M

FEDERAL RESERVE SYSTEM

Citizens Bankshares, Inc.; Acquisition of Company Engaged in Permissible Nonbanking Activities

The organization listed in this notice has applied under § 225.23 (a)(2) or (f) of the Board's Regulation Y (12 CFR 225.23 (a)(2) or (f)) for the Board's approval under section 4(c)(8) of the Bank Holding Company Act (12 U.S.C. 1843(c)(8)) and § 225.21(a) of Regulation Y (12 CFR 225.21(a)) to acquire or control voting securities or assets of a company engaged in a nonbanking activity that is listed in § 225.25 of Regulation Y as closely related to banking and permissible for bank holding companies. Unless otherwise noted, such activities will be conducted throughout the United States.

The application is available for immediate inspection at the Federal Reserve Bank indicated. Once the application has been accepted for processing, it will also be available for inspection at the offices of the Board of Governors. Interested persons may express their views in writing on the question whether consummation of the proposal can "reasonably be expected to produce benefits to the public, such as greater convenience, increased competition, or gains in efficiency, that outweigh possible adverse effects, such as undue concentration of resources, decreased or unfair competition, conflicts of interests, or unsound banking practices." Any request for a hearing on this question must be accompanied by a statement of the reasons a written presentation would not suffice in lieu of a hearing, identifying specifically any questions of fact that are in dispute, summarizing the evidence that would be presented at a hearing, and indicating how the party commenting would be aggrieved by approval of the proposal.

Comments regarding the application must be received at the Reserve Bank indicated or the offices of the Board of Governors not later than May 3, 1985.

A. **Federal Reserve Bank of San Francisco** (Harry W. Green, Vice President) 101 Market Street, San Francisco, California 94105:

1. *Citizens Bankshares, Inc.*, Ogden, Utah; to continue to engage in all aspects of the industrial loan business as provided under Utah law, including the making of loans and issuance of thrift certificates and thrift passbook accounts, through the acquisition of certain assets and assumption of certain liabilities of Continental Thrift and Loan, Salt Lake City, Utah.

Board of Governors of the Federal Reserve System, April 8, 1985.

James McAfee,

Associate Secretary of the Board.

[FR Doc. 85-8788 Filed 4-11-85; 8:45 am]

BILLING CODE 6210-01-M

First New England Bankshares Corp. et al.; Formations of, Acquisitions by, and Mergers of Bank Holding Companies

The companies listed in this notice have applied for the Board's approval under section 3 of the Bank Holding Company Act (12 U.S.C. 1842) and § 225.14 of the Board's Regulation Y (12 CFR 225.14) to become a bank holding company or to acquire a bank or bank holding company. The factors that are considered in acting on the applications are set forth in section 3(c) of the Act (12 U.S.C. 1842(c)).

Each application is available for immediate inspection at the Federal Reserve Bank indicated. Once the application has been accepted for processing, it will also be available for inspection at the offices of the Board of Governors. Interested persons may express their views in writing to the Reserve Bank or to the offices of the Board of Governors. Any comment on an application that requests a hearing must include a statement of why a written presentation would not suffice in lieu of a hearing, identifying specifically any questions of fact that are in dispute and summarizing the evidence that would be presented at a hearing.

Unless otherwise noted, comments regarding each of these applications must be received not later than May 3, 1985.

A. **Federal Reserve Bank of Boston** (Richard E. Randall, Vice President) 600 Atlantic Avenue, Boston, Massachusetts 02106:

1. *First New England Bankshares Corp.*, Taunton, Massachusetts; to become a bank holding company by acquiring 100 percent of the voting shares of First Bristol County National Bank, Taunton, Massachusetts.

B. **Federal Reserve Bank of Atlanta** (Robert E. Heck, Vice President) 104 Marietta Street NW., Atlanta, Georgia 30303:

1. *Community State Banking Corporation*, Starke, Florida; to become a bank holding company by acquiring 80 percent of the voting shares of Community State Bank of Starke, Starke, Florida.

C. **Federal Reserve Bank of Chicago** (Franklin D. Dreyer, Vice President) 230 South LaSalle Street, Chicago, Illinois 60690:

1. *Cascade Bancorporation, Inc.*, Cascade, Wisconsin; to become a bank holding company by acquiring 97.5 percent of the voting shares of State Bank of Cascade, Cascade, Wisconsin.

2. *Mt. Zion Bancorp, Inc.*, Mt. Zion, Illinois; to acquire 70.40 percent of the voting shares of First National Bank of Mt. Zion, Mt. Zion, Illinois.

Board of Governors of the Federal Reserve System, April 8, 1985.

James McAfee,

Associate Secretary of the Board.

[FR Doc. 85-8789 Filed 4-11-85; 8:45 am]

BILLING CODE 6210-01-M

North American Bank Corp.; Application To Engage de Novo in Permissible Nonbanking Activities

The company listed in this notice has filed an application under § 225.23(a)(1) of the Board's Regulation Y (12 CFR 225.23(a)(1)) for the Board's approval under section 4(c)(8) of the Bank Holding Company Act (12 U.S.C. 1843(c)(8)) and § 225.21(a) of Regulation Y (12 CFR 225.21(a)) to commence or to engage *de novo*, either directly or through a subsidiary, in a nonbanking activity that is listed in section 225.25 of Regulation Y as closely related to banking and permissible for bank holding companies. Unless otherwise noted, such activities will be conducted throughout the United States.

The application is available for immediate inspection at the Federal Reserve Bank indicated. Once the application has been accepted for processing, it will also be available for inspection at the offices of the Board of Governors. Interested persons may express their views in writing on the question whether consummation of the proposal can "reasonably be expected to produce benefits to the public, such as greater convenience, increased competition, or gains in efficiency, that outweigh possible adverse effects, such as undue concentration of resources, decreased or unfair competition, conflicts of interests, or unsound banking practices." Any request for a hearing on this question must be accompanied by a statement of the reasons a written presentation would not suffice in lieu of a hearing, identifying specifically any questions of fact that are in dispute, summarizing the evidence that would be presented at a

hearing, and indicating how the party commenting would be aggrieved by approval of the proposal.

Unless otherwise noted, comments regarding the application must be received at the Reserve Bank indicated or the offices of the Board of Governors not later than May 1, 1985.

A. **Federal Reserve Bank of Boston** (Richard E. Randall, Vice President) 600 Atlantic Avenue, Boston, Massachusetts 02106:

1. *North American Bank Corporation*, Farmington, New Hampshire; to engage *de novo* on an on-going basis in commercial finance through commercial loan participations with North American Bank Corporation's wholly owned subsidiary, Farmington National and Savings Bank, Farmington, New Hampshire.

Board of Governors of the Federal Reserve System, April 8, 1985.

James McAfee,

Associate Secretary of the Board.

[FR Doc. 85-8790 Filed 4-11-85; 8:45 am]

BILLING CODE 6210-01-M

Bankers Trust New York Corporation; Application To Engage de Novo in Permissible Nonbanking Activities

The company listed in this notice has filed an application under § 225.23(a)(1) of the Board's Regulation Y (12 CFR 225.23(a)(1)) for the Board's approval under section 4(c)(8) of the Bank Holding Company Act (12 U.S.C. 1843(c)(8)) and § 225.21(a) of Regulation Y (12 CFR 225.21(a)) to commence or to engage *de novo*, either directly or through a subsidiary, in a nonbanking activity that is listed in § 225.25 of Regulation Y as closely related to banking and permissible for bank holding companies. Unless otherwise noted, such activities will be conducted throughout the United States.

The application is available for immediate inspection at the Federal Reserve Bank indicated. Once the application has been accepted for processing, it will also be available for inspection at the offices of the Board of Governors. Interested persons may express their views in writing on the question whether consummation of the proposal can "reasonably be expected to produce benefits to the public, such as greater convenience, increased competition, or gains in efficiency, that outweigh possible adverse effects, such as undue concentration of resources, decreased or unfair competition, conflicts of interests, or unsound banking practices." Any request for a hearing on this question must be accompanied by a statement of the reasons a written presentation would not suffice in lieu of a hearing, identifying specifically any questions of fact that are in dispute, summarizing the evidence that would be presented at a hearing, and indicating how the party commenting would be aggrieved by approval of the proposal.

Unless otherwise noted, comments regarding the application must be received at the Reserve Bank indicated or the offices of the Board of Governors not later than May 7, 1985.

A. **Federal Reserve Bank of New York** (A. Marshall Puckett, Vice President) 33 Liberty Street, New York, New York 10045:

1. *Bankers Trust New York Corporation*, New York, New York; to engage *de novo* directly in underwriting and dealing in government obligations and money market instruments; acting as investment or financial advisor; providing management consulting advice to nonaffiliated bank and nonbank depository institutions; and leasing personal or real property or acting as agent, broker, or advisor in leasing such property.

Board of Governors of the Federal Reserve System, April 9, 1985.

James McAfee,

Associate Secretary of the Board.

[FR Doc. 85-8909 Filed 4-11-85; 8:45 am]

BILLING CODE 6210-01-M

Third National Corporation et al., Formations of; Acquisitions by; and Mergers of Bank Holding Companies

The companies listed in this notice have applied for the Board's approval under section 3 of the Bank Holding Company Act (12 U.S.C. 1842) and § 225.14 of the Board's Regulation Y (12 CFR 225.14) to become a bank holding company or to acquire a bank or holding company. The factors that are considered in acting on the applications are set forth in section 3(c) of the Act (12 U.S.C. 1842(c)).

Each application is available for immediate inspection at the Federal Reserve Bank indicated. Once the application has been accepted for processing, it will also be available for inspection at the offices of the Board of Governors. Interested persons may express their views in writing to the Reserve Bank or to the offices of the Board of Governors. Any comment on an application that requests a hearing must include a statement of why a written presentation would not suffice in lieu of a hearing, identifying specifically any questions of fact that are in dispute and summarizing the evidence that would be presented at a hearing.

Unless otherwise noted, comments regarding each of these applications must be received not later than May 8, 1985.

A. **Federal Reserve Bank of Atlanta** (Robert E. Heck, Vice President) 104 Marietta Street, N.W., Atlanta, Georgia 30303:

1. *Third National Corporation*, Nashville, Tennessee; to merge with Mid-South Bancorp, Inc., Murfreesboro, Tennessee thereby indirectly acquiring Mid-South Bank and Trust Company, Murfreesboro, Tennessee.

B. **Federal Reserve Bank of Chicago** (Franklin D. Dreyer, Vice President) 230 South LaSalle Street, Chicago, Illinois 60690:

1. *GNP Bancorp, Inc.*, Mundelein, Illinois; to become a bank holding company by acquiring 100 percent of the voting shares of New Century Bank, Mundelein, Illinois.

2. *Montgomery Financial Corporation*, Darlington, Indiana; to become a bank holding company by acquiring at least 80 percent of the voting shares of Farmers and Merchants State Bank, Darlington, Indiana.

C. **Federal Reserve Bank of St. Louis** (Delmer P. Weisz, Vice President) 411 Locust Street, St. Louis, Missouri 63166:

1. *Sebree Bankcorp*, Sebree, Kentucky; to become a bank holding company by acquiring 100 percent of the voting shares of Sebree Deposit Bank, Sebree, Kentucky.

D. **Federal Reserve Bank of Kansas City** (Thomas M. Hoenig, Vice President) 925 Grand Avenue, Kansas City, Missouri 64198:

1. *First Shawnee Bancshares, Inc.*, Shawnee, Kansas; to become a bank holding company by acquiring 100 percent of the voting shares of First National Bank in Shawnee, Shawnee, Kansas.

Board of Governors of the Federal Reserve System, April 9, 1985.

James McAfee,

Associate Secretary of the Board.

[FR Doc. 85-8910 Filed 4-11-85; 8:45 am]

BILLING CODE 6210-01-M

DEPARTMENT OF HEALTH AND HUMAN SERVICES

Office of the Secretary

Agency Forms Submitted to the Office of Management and Budget for Clearance

Each Friday the Department of Health and Human Services (HHS) publishes a list of information collection packages it has submitted to the Office of

Management and Budget (OMB) for clearance in compliance with the Paperwork Reduction Act (44 U.S.C. Chapter 35). The following are those packages submitted to OMB since the last list was published on April 5, 1985.

Social Security Administration

Subject: Annual Earnings Test Direct-Mail Followup Program Notices—Reinstatement—SSA-L 9778 through 9782—(0960-0369)
Respondents: Individuals
OMB Desk Officer: Judy A. McIntosh

Human Development Services

Subject: Study of Adoption Exchanges—New
Respondents: Adoption Exchanges, adoption agencies
Subject: Statewide Information System—Section 427 (a)(2)(A) of Pub. L. 96-272, The Adoption Assistance and Child Welfare Act of 1980—Reinstatement (0980-0138)
Respondents: States
OMB Desk Officer: Judy A. McIntosh

Public Health Service

Centers for Disease Control

Subject: Use of Hepatitis B Vaccine in High Risk Groups—New
Respondents: Individuals and Physicians
Subject: NIOSH Cross-Sectional and Prospective Medical Industrywide Studies—Extension—(0920-0037)
Respondents: Individuals or households

Alcohol, Drug Abuse and Mental Health Administration

Subject: Evaluation of Child Abuse Reporting and Confidentiality of Alcohol and Drug Abuse Patient Records—New
Respondents: State/local governments
OMB Desk Officer: Fay S. Iudicello

Office of the Assistant Secretary for Health

Subject: Validation of Measures Developed for an Evaluation Handbook for Health Education Programs in Smoking Prevention/Cessation—New
Respondents: Individuals
OMB Desk Officer: Fay S. Iudicello

Health Care Financing Administration

Subject: BERC 024, FN Coverage of Oxygen for Use in a Patient's Home—HCFA-R-60—New
Respondents: Small businesses or organizations
Subject: Plan of Treatment (POT) and Home Health Certification Form, HCFA-485 Medical Information Form (MIF), HCFA-486 Addendum to the POT and MIF, HCFA-487, and Intermediary Medical Information Request, HCFA-488—Revision (0938-0357)
Respondents: State/local governments, businesses or other for-profit, non-profit institutions, small businesses or organizations
OMB Desk Officer: Fay S. Iudicello

Copies of the above information collection clearance packages can be obtained by calling the HHS Reports Clearance Officer on 202-245-6511.

Written comments and recommendations for the proposed information collections should be sent directly to the appropriate OMB Desk Officer designated above at the following address: OMB Reports Management Branch, New Executive Office Building, Room 3208, Washington, DC 20503, Atten: (name of OMB Desk Officer).

Dated: April 8, 1985.

Wallace O. Keene,

Acting Deputy Assistant Secretary for Management Analysis and Systems.

[FR Doc. 85-8744 Filed 4-11-85; 8:45 am]

BILLING CODE 4150-04-M

Centers for Disease Control

Mine Health Research Advisory Committee; Meeting

In accordance with section 10(a)(2) of the Federal Advisory Act (Pub. L. 92-463), the Centers for Disease Control (CDC) announces the following National Institute for Occupational Safety and Health (NIOSH) committee meeting:

Name: Mine Health Research Advisory Committee (MHRAC)
Date: April 29-30, 1985
Place: Knollwood Room, Omni Hotel, One Omni International, Atlanta, Georgia 30335
Time and Type of Meeting: Open 9:00 a.m. to 4:30 p.m.—April 29; Closed 4:30 p.m. to 5:00 p.m.—April 29; Open 9:00 a.m. to 12:00 noon—April 30
Contact Person: Roy M. Fleming, Sc.D., Executive Secretary, MHRAC, NIOSH, CDC, Building 1, Room 3053, 1600 Clifton Road, N.E., Atlanta, Georgia 30333, Telephone: (404) 329-3343

Purpose: The committee is charged with advising the Secretary of Health and Human Services on matters involving or relating to mine health research, including grants and contracts for such research.

Agenda: Agenda items for the meeting will include announcements; consideration of minutes of previous meeting and future meeting dates; recommendations from the diesel subgroup; discussion of issues related to the x-ray surveillance program for underground coal miners; and an overview of the NIOSH mining program.

Beginning at 4:30 p.m. through 5:00 p.m., April 29, the Committee will be performing the final review of the mine health research grant applications for Federal assistance. This portion of the meeting will not be open to the public in accordance with the provisions set forth in section 552b(c)(6), Title 5 U.S. Code, and the Determination of the Director, Centers for Disease Control, pursuant to Pub. L. 92-463.

Agenda items are subject to change as priorities dictate.

The portion of the meeting so indicated is open to the public for observation and participation. Anyone wishing to make an oral presentation should notify the contact person listed above as soon as possible before the meeting. The request should state the amount of time desired, the capacity in which the person will appear, and a brief outline of the presentation. Oral presentations will be scheduled at the discretion of the Chairperson and as time permits. Anyone wishing to have a question answered by a scheduled speaker during the meeting should submit the question in writing, along with his or her name and affiliation, through the Executive Secretary to the Chairperson. At the discretion of the Chairperson and as time permits, appropriate questions will be asked of the speakers.

A roster of members and other relevant information regarding the meeting may be obtained from the contact person listed above.

Dated: April 8, 1985.

Elvin Hilyer,

Associate Director for Policy Coordination, Centers for Disease Control.

[FR Doc. 85-8929 Filed 4-11-85; 8:45 am]

BILLING CODE 4160-19-M

Health Care Financing Administration

Privacy Act of 1974; Report of New System

AGENCY: Health Care Financing Administration (HCFA), HHS.

ACTION: Notice of New System of Records.

SUMMARY: In accordance with the requirements of the Privacy Act of 1974 we are proposing to establish a new system of records, Credit Reports for Medicaid Recipients, (Credit Bureau(s)), HHS/HCFA/BQC No. 09-70-2004. We have provided background information about the proposed system in the "Supplementary Information" section below. HCFA invites public comments by May 9, 1985, with respect to routine uses of the system.

DATES: HCFA filed a new system report with the Speaker of the House, the President of the Senate, and the Director, Office of Management and Budget (OMB), on April 9, 1985. The new system of records including routine uses will become effective June 10, 1985, unless HCFA receives comments which

would convince us to make a contrary determination.

ADDRESS: The public should address comments to Richard A. DeMeo, Privacy Act Officer, Office of Management and Budget, Health Care Financing Administration, Room G-A-1, East Low Rise Building, 6325 Security Boulevard, Baltimore, Maryland 21207. Comments received will be available for inspection at this location.

FOR FURTHER INFORMATION CONTACT: Stephen A. Snyder, Bureau of Quality Control, Health Care Financing Administration, Room 239, East High Rise Building, 6325 Security Boulevard, Baltimore, Maryland 21207, telephone 301-594-8157.

SUPPLEMENTARY INFORMATION: HCFA proposes to initiate a new system of records collecting data under the authority of and to implement section 1903(u) of the Social Security Act enacted by section 133 of the Tax Equity and Fiscal Responsibility Act of 1982, Pub. L. 97-248. Section 1903(u)(1)(A) of the Social Security Act requires the Secretary to measure the amount of erroneous expenditures in determining Medicaid eligibility and to disallow Federal financial participation for erroneous expenditures greater than 3 percent beginning with the April-September 1983 review period and each fiscal year thereafter. Title 42 CFR 431.800 established a Medicaid Quality Control system to identify eligibility errors which is used to measure the amount of erroneous expenditures by States. This is in compliance with section 1903(u). Information received from the credit bureau(s) will enable HCFA to more accurately establish the amount of erroneous excess payments and thus reduce erroneous expenditures or increase savings for disallowances.

The purpose of this system of records is to use credit bureaus to identify and/or verify sources of income and resources of Medicaid recipients.

Although contracts will be executed, at this time no credit bureau(s) has been selected.

In order to complete the objectives, HCFA regional offices will directly request credit files from the credit bureau(s) on Medicaid recipients included in sample groups. Since we are proposing to establish this system of records in accordance with the requirements and principles of the Privacy Act we do not anticipate that it will have an unfavorable effect on the privacy or other personal rights of individuals.

The Privacy Act permits us to disclose information without the consent of individuals for "routine uses"—that is, disclosures that are compatible with the purpose for which we collected the information. The proposed routine uses in the new system meet the compatability criteria since the information is collected for administering the Medicaid program for which we are responsible. We anticipate that disclosures under the routine uses will not result in any unwarranted adverse effects on personal privacy.

Dated: April 5, 1985.

Carolyne K. Davis,

Administrator, Health Care Financing Administration.

SYSTEM NAME

Credit Reports for Medicaid Recipients (Credit Bureaus) HHS/HCFA/BQC.

SECURITY CLASSIFICATION

None.

SYSTEM LOCATION

HCFA central office and regional offices (see Appendix A)

CATEGORIES OF INDIVIDUALS COVERED BY THE SYSTEM

Seven thousand five hundred to ten thousand Medicaid recipients in sample groups per year for three years. Contracts may be reawarded after three years.

CATEGORIES OF RECORDS IN THE SYSTEM

Credit Bureau Credit Files

AUTHORITY FOR MAINTENANCE OF THE SYSTEM

Section 1903(u) of the Social Security Act (42 USC 1396(u)) was enacted by section 133 of TEFRA, Pub. L. 97-248.

Regulations 42 CFR 431.800, 43 FR 45188, September 29, 1978, as amended at 44 FR 17935, March 23, 1979; 48 FR 29453, June 24, 1983 and implementing regulation 431.803, 48 FR 29450, June 24, 1983, as amended 49 FR 4740, February 8, 1984, and 431.804, 48 FR 54224, December 1, 1983.

PURPOSE(S)

To use credit bureaus to identify and verify sources of income and resources of Medicaid recipients.

ROUTINE USES OF RECORDS MAINTAINED IN THE SYSTEM INCLUDING CATEGORIES OF USERS AND PURPOSES OF SUCH USES

Disclosures may be made:

1. To the contractor which will use the information to supply HCFA with a credit file and which shall be required to maintain Privacy Act safeguards with respect to such records.

2. To a State Medicaid agency which will use the information in its eligibility decisions.

3. To a congressional office, from the record of an individual in response to an inquiry from the congressional office made at the request of that individual.

4. In the event of litigation where the defendant is (a) the Department, any component of the department, or any employee of the Department in his or her official capacity; (b) the United States where the Department determines that the claim, if successful, is likely to directly affect the operations of the Department or any of its components; (c) any Department employee in his or her individual capacity where the Justice Department has agreed to represent such employee, the Department may disclose such records as it deems desirable or necessary to the Department of Justice to present an effective defense, provided such disclosure is compatible with the purpose for which the records were collected.

POLICIES AND PRACTICES FOR STORING, RETRIEVING, ACCESSING, RETAINING, AND DISPOSING OF RECORDS IN THE SYSTEM

Storage:

Storage will be on paper and magnetic tape.

Retrievability:

Information will be retrieved by recipient's name, social security number or other unique identifier by HCFA or the contractor.

SAFEGUARDS

HCFA will maintain all records in appropriate files accessible only to authorized employees and will notify all employees having access to records of criminal sanctions for unauthorized disclosure of information on individuals. For computerized records, if required, HCFA and/or the contractor will initiate automated data processing (ADP) system security procedures required by DHHS *ADP Systems Manual*, Part 6, ADP Systems Security (e.g. use of passwords), and the National Bureau of Standards Federal Information Processing Standards.

RETENTION AND DISPOSAL

Hard copy records and magnetic tape will be maintained. Disposal occurs three years from the last action on the case.

SYSTEM MANAGER(S) AND ADDRESS

Director, Bureau of Quality Control, Health Care Financing Administration, Room 200, East High Rise Building, 6325 Security Boulevard, Baltimore, Maryland 21207.

NOTIFICATION PROCEDURE

To determine if a record exists write to the System Manager at the address indicated above. Specify name, address, and State.

RECORD ACCESS PROCEDURES

Same as notification procedure. Requestors should also reasonably specify the record contents being sought.

CONTESTING RECORD PROCEDURES

Contact the System Manager named above and reasonably identify the record and specify the information to be contested. State the reason for contesting it (e.g., why it is inaccurate, irrelevant, incomplete or not current).

RECORD SOURCE CATEGORIES

Credit files collected from credit bureaus.

SYSTEMS EXEMPTED FROM CERTAIN PROVISIONS OF THE ACT

None.

Appendix A.—Health Care Financing Administration Central and Regional Office Addresses

1. Central Office Address: Bureau of Quality Control, HCFA, Room 239, East High Rise, 6325 Security Boulevard, Baltimore, Maryland 21207.

2. HCFA Regional Office Addresses:

Boston Region—Connecticut, Maine, Massachusetts, New Hampshire, Rhode Island, Vermont; John F. Kennedy Federal Building, Room 1309, Boston, Massachusetts 02203

New York Region—New Jersey, New York, Puerto Rico, Virgin Islands; 26 Federal Plaza, Room 38-130, New York, New York 10007.

Philadelphia Region—Delaware, District of Columbia, Maryland, Pennsylvania, Virginia, West Virginia; P.O. Box 7760, Philadelphia, Pennsylvania 19101.

Atlanta Region—Alabama, North Carolina, South Carolina, Florida, Georgia, Kentucky, Mississippi, Tennessee; 101 Marietta Street, Suite 602, Atlanta, Georgia 30323.

Chicago Region—Illinios, Indiana, Michigan, Minnesota, Ohio, Wisconsin; 175 West Jackson, Suite A-835, Chicago, Illinios 60604.

Dallas Region—Arkansas, Louisiana, New Mexico, Oklahoma, Texas; Medicare/Medicaid Quality Control, P.O. Box 50768, Dallas, Texas 75250-0768

Kansas City Region—Iowa, Kansas, Missouri, Nebraska; New Federal Office Building, Room 235, 601 East 12th Street, Kansas City, Missouri 64106.

Denver Region—Colorado, Montana, North Dakota, South Dakota, Utah, Wyoming; Federal Office Building, 5th Floor, 1961 Stout Street, Denver, Colorado 80294.

San Francisco Region—American Samoa, Arizona, California, Guam, Hawaii, Nevada; Federal Office Building, 100 Van Ness Avenue, 20th Floor, San Francisco, California 94102.

Seattle Region—Alaska, Idaho, Oregon, Washington; 2901 Third Avenue, Mail Stop 406, Seattle, Washington 98121.

[FR Doc. 85-8778 Filed 4-11-85; 8:45 am]

BILLING CODE 4120-03-M

National Institutes of Health

Availability of Request for Applications for Grants To Study Visual Function in Low Vision Patients National Eye Institute [1]; Announcement

Application Receipt Date: June 14, 1985.

The National Eye Institute (NEI), in cooperation with the National Institute on Aging (NIA), announces the availability of a Request for Applications for research project grants for support of studies on functional vision in low vision patients. The major objective of this RFA is to encourage scientists and clinicians to relate information derived from laboratory tests of visual function to patients' ability to perform common visually based tasks in their everyday lives. The goal is to develop a battery of tests that could be used by practicing eye care specialists to generate a profile of visual function for each of their patients and then predict how their functioning will improve with the use of specific visual aids.

Surveys of visually impaired persons reveal two main clusters to tasks that present special difficulties for patients' adaptation to limited vision: orientation and mobility tasks and tasks involving visual information extraction. It is expected that multidisciplinary teams of eye care specialists, vision scientists, orientation and mobility specialists, and rehabilitation professionals will be required to address these problems.

The mechanism of support for this program will be the traditional individual research project grant (RO1). Review of applications for scientific and technical merit will be by an initial review group convened solely for this purpose by the Review and Special Project Office, NEI. Following the initial review for scientific merit, applications will be reviewed by the National Advisory Eye Council.

Requests for copies of the complete RFA should be addressed to: Constance W. Atwell, Ph.D., Chief, Strabismus, Amblyopia, and Visual Processing Branch, National Eye Institute, Building 31, Room 6A49, Bethesda, Maryland 20205, Telephone: (301) 496-5301.

[1] In cooperation with the National Institute on Aging.

This program is described in the Catalog of Federal Domestic Assistance No. 13.871, Strabismus, Amblyopia and Visual Processing. Awards will be made under the authority of the Public Health Service Act, Title III, Part A, Section 301, Pub. L. 78-410, as amended (42 USC 241); and administered under PHS Grants Policies and Federal Regulation 42 CFR Part 52 and 45 CFR Part 74. This program is not subject to the requirement of Executive Order 12372 or Health Systems Agency review.

Dated: April 2, 1985.

James B. Wyngaarden,

Director, NIH.

[FR Doc. 85-8797 Filed 4-11-85; 8:45 am]

BILLING CODE 4140-01-M

Social Security Administration

Iran; Finding Regarding Foreign Social Insurance or Pension System

Section 202(t)(1) of the Social Security Act (42 U.S.C. 402(t)(1)) prohibits payment of monthly benefits to aliens, subject to the exceptions described in sections 202(t)(2) through 202(t)(5) of the Social Security Act (42 U.S.C. 402(t)(2) through 402(t)(5)), for any month after they have been outside the United States for 6 consecutive calendar months.

Section 202(t)(2) of the Social Security Act (42 U.S.C. 402(t)(2)) provides that section 202(t)(1) shall not apply to any individual who is a citizen of a foreign country which the Secretary of Health and Human Services finds has in effect a social insurance or pension system which is of general application in such country and under which (A) periodic benefits, or the actuarial equivalent thereof, are paid on account of old age, retirement, or death, and (B) individuals who are citizens of the United States but not citizens of such foreign country and who qualify for such benefits are permitted to receive such benefits or the actuarial equivalent thereof while outside such foreign country without regard to the duration of the absence.

Subparagraphs (A) and (B) of section 202(t)(4) of the Social Security Act (42 U.S.C. 402(t)(4) (A) and (B)) provide that section 202(t)(1) shall not be applicable to benefits payable on the earnings record of an individual who has 40 quarters of coverage under Social Security or who has resided in the United States for a period or periods aggregating 10 years or more. However, the provisions of subparagraphs (A) and (B) of section 202(t)(4) shall not apply to an individual who is a citizen of a foreign country that has in effect a social insurance or pension system which is of general application in such

country and which satisfies the provisions of subparagraph (A) of section 202(t)(2) but not the provisions of subparagraph (B) of section 202(t)(2).

Pursuant to authority duly vested in the Commissioner of Social Security by the Secretary of Health and Human Services, and redelegated to the Director of the International Policy Staff, the Director has approved a finding that Iran has had a social insurance or pension system which pays periodic benefits, or the actuarial equivalent thereof, on account of old age, retirement, or death since August 1975 when the most recent social insurance law was enacted.

Further, a finding has been approved that Iran paid benefits to United States citizens outside of Iran in compliance with part (B) of section 202(t)(2) of the Social Security Act from 1975 through November of 1978. From December 1978 on, Iran did not pay benefits to eligible United States citizens outside of Iran.

Accordingly, it is hereby determined and found that Iran has had in effect since August 1975 a social insurance or pension system which meets the requirements of section 202(t)(2)(A) of the Social Security Act (42 U.S.C. 402(t)(2)(A)); and, from August 1975 through November 1978, Iran would pay benefits to eligible United States citizens who reside outside of Iran. This revises our finding of December 3, 1968 (published at 33 FR 17928), that Iran does not have in effect a social insurance or pension system which meets the requirements of section 202(t)(2).

It is also determined that, effective with December 1978, the system would not pay benefits to eligible United States citizens residing outside of Iran and, therefore, did not meet and does not meet, the provisions of section 202(t)(2)(B) of the Social Security Act (42 U.S.C. 402(t)(2)(B)) from that date forward.

Dated: April 4, 1985.

Elizabeth K. Singleton,

Director, International Policy Staff.

[FR Doc. 85-8846 Filed 4-11-85; 8:45 am]

BILLING CODE 4190-11-M

DEPARTMENT OF THE INTERIOR

Bureau of Indian Affairs

Pine River Indian Irrigation Project, Colorado

ACTION: Notice.

SUMMARY: The purpose of this public notice is to change the per acre assessment rate for the operation and maintenance of the irrigation facilities of the Pine River Indian Irrigation Project to properly reflect the cost of labor, materials, equipment, and services. The change is from $3.66 to $5.25 per acre per year.

EFFECTIVE DATE: The effective date of this notice is March 21, 1985, for the 1985 and subsequent irrigation seasons and remains in effect until changed.

FOR FURTHER INFORMATION CONTACT: George E. Gover, Superintendent, Bureau of Indian Affairs, Southern Ute Agency, P.O. Box 315, Ignacio, Colorado 81137; telephone number (303) 563-4511.

SUPPLEMENTARY INFORMATION: This notice is issued by authority delegated the Assistant Secretary of the Interior in 209 DM 8 and redelegated by the Deputy Assistant Secretary for Indian Affairs (Operations) to the Area Director in 10 BIAM 3.

An analysis of costs of operation and maintenance of the Pine River Indian Irrigation Project was mailed to individual waterusers and further explained to the project waterusers at a general meeting conducted on January 31, 1985. The analysis was presented to the Southern Ute Tribal Council on February 5, 7, and March 13, 1985, and additionally presented to Southern Ute tribal waterusers on March 20, 1985. The cost analysis was posted in three conspicuous locations on the reservation.

This notice shall read as follows:

Pine River Indian Irrigation Project

Annual Operation and Maintenance Charges

Annual Per Acre Assessment—The basic annual assessment for operation and maintenance against the irrigable lands to which water can be delivered under the Pine River Indian Irrigation Project in Colorado is hereby fixed for the year 1985 and thereafter until further notice as follows:

Annual Per Acre Assessment:

1. Project Operations and Maintenance $4.00
2. Vallecito Reservoir Operation and Maintenance $1.25
3. Minimum Charges for Any Tract $6.00

Payment—With the exception of 1985, the annual operation and maintenance assessment shall be due and payable on April 1 of each year and continued in effect thereafter until further notice. The 1985 annual operation and maintenance assessment is due and payable on May 1, 1985. Water will not be delivered to land until the assessment has been paid or arrangements have been made under CFR Part 171.17 Operation and Maintenance Charges.

Vincent Little,

Area Director, Albuquerque Area Office.

[FR Doc. 85-8870 Filed 4-11-85; 8:45 am]

BILLING CODE 4310-02-M

Bureau of Land Management

Extension of Public Comment Period Draft Guidelines on Section 201(a)(2)(A) of the Act of February 25, 1920, as amended (30 U.S.C. 2(a)(2)(A))

AGENCY: Bureau of Land Management, Interior.

ACTION: Notice of extension of public comment period.

SUMMARY: This notice extends the comment period to allow the public to develop an appropriate response on the draft guidelines on Section 2(a)(2)(A) of the Act of February 25, 1920, as amended (otherwise known as the Mineral Leasing Act (MLA)) (30 U.S.C. 201(a)(2)A)). The Bureau of Land Management published draft logical mining unit (LMU) application and processing guidelines in the **Federal Register** on April 11, 1985. The LMU guidelines are intended to supplement the Department of the Interior's implementation rules at 43 CFR 3487 (1984). LMU production may be used to satisfy the production obligations of Section 2(a)(2)(A) of MLA. Due to the interrelationship between the two draft guidelines, the comment period for the draft guidelines on Section 2(a)(2)(A) of MLA is hereby extended for a period of 30 days from the date of publication of the draft LMU guidelines.

DATES AND ADDRESSES: Comments must be submitted by May 13, 1985. Comments received or postmarked after that date may not be considered as part of the decisionmaking process on the final guidelines on Section 2(a)(2)(A) of MLA. Please note that comments on the draft LMU guidelines must still be submitted by June 10, 1985. Comments received or postmarked after that date may not be considered as part of the decisionmaking process on the final guidelines on LMU application and processing. Comments on both guidelines should be sent to: Director (660), Bureau of Land Management, 18th and C Streets NW., Washington, DC 20240.

SUPPLEMENTARY INFORMATION: Section 2(a)(2)(A) of MLA provides that any entity that holds and has held a Federal coal lease for 10 years when such entity is not, except as provided for in Section 7(b) of MLA, producing coal from the

lease deposits in commercial quantities, cannot be issued a Federal lease on or after August 4, 1986. The Bureau of Land Management proposed guidelines on February 15, 1985 (50 FR 6398), that detail the interrelationships of the Section 2(a)(2)(A) prohibition to other aspects of MLA, such as LMU's and lease diligence obligations, treated in the coal rules at 43 CFR Group 3400 (1984).

The rules regarding LMU application and processing are codified at 43 CFR 3487 (1984). Section 2(d) of MLA (30 U.S.C. 202a) provides for formation of LMU's. Section 2(d) also states that "the Secretary may provide . . . that . . . production . . . [anywhere] . . . in the [LMU] shall be construed as occurring on all Federal leases in that [LMU]." The draft LMU guidelines, which supplement the rules at 43 CFR 3487 (1984), exercise this Secretarial discretion and state that production from anywhere within an LMU constitutes production from all Federal leases contained in the approved LMU. Therefore, LMU production may be used to satisfy the production obligations of Section 2(a)(2)(A) of MLA. The Bureau of Land Management proposed draft LMU application and processing guidelines in the **Federal Register** on April 11, 1985.

Due to the interrelationships of LMU production and the Section 2(a)(2)(A) of MLA prohibition, the Bureau of Land Management has extended the comment period for the draft guidelines on Section 2(a)(2)(A) of MLA to allow for concurrent review and comment by the public.

FOR FURTHER INFORMATION CONTACT: Mr. Paul W. Politzer or Mr. Allen B. Agnew, (202) 343-7722.

Dated: April 8, 1985.

Robert F. Burford,

Director, Bureau of Land Management.

[FR Doc. 85-8777 Filed 4-11-85; 8:45 am]

BILLING CODE 4310-84-M

[AA-6673-K; AA-6683-A2]

Alaska Native Claims Selections

In accordance with Departmental regulation 43 CFR 2650.7(d), notice is hereby given that a decision to issue conveyance under the provisions of sec. 12 of the Alaska Native Claims Settlement Act of December 18, 1971 (ANCSA), 43 U.S.C. 1601, 1611, will be issued to Stuyahok Limited for approximately 1,920 acres. The lands involved are in the vicinity of New Stuyahok.

Seward Meridian, Alaska (Surveyed)

T. 6 S., R. 45 W.

T. 7 S., R. 46 W.

A notice of the decision will be published once a week for four (4) consecutive weeks, in THE ANCHORAGE DAILY NEWS. Copies of the decision may be obtained by contacting the Bureau of Land Management, Alaska State Office, 701 C Street, Box 13, Anchorage, Alaska 99513 ((907) 271-5960).

Any party claiming a property interest which is adversely affected by the decision shall have until May 13, 1985 to file an appeal. However, parties receiving service by certified mail shall have 30 days from the date of receipt to file an appeal. Appeals must be filed in the Bureau of Land Management, Division of Conveyance Management (906), address identified above, where the requirements for filing an appeal can be obtained. Parties who do not file an appeal in accordance with the requirements of 43 CFR Part 4, Subpart E (1983) (as amended, 49 FR 6371, February 21, 1984) shall be deemed to have waived their rights.

Barbara A. Lange,

Section Chief, Branch of ANCSA Adjudication.

[FR Doc. 85-8845 Filed 4-11-85; 8:45 am]

BILLING CODE 4310-JA-M

[F-14988]

Proposed Withdrawal and Opportunity for Public Meeting, Alaska

AGENCY: Bureau of Land Management, Interior.

ACTION: Notice.

SUMMARY: The U.S. Air Force proposes to withdraw approximately 4,108 acres of public land as a buffer zone for the Indian Mountain Research Site. The lands will remain closed to surface entry, mining and mineral leasing under Public Land Order (PLO) No. 5184. This notice closes the land for up to 2 years from selection by the State of Alaska, the only form of appropriation authorized by PLO 5184.

EFFECTIVE DATE: April 12, 1985; comments must be received on or before July 11, 1985.

ADDRESS: Comments and meeting requests should be sent to: Alaska State Office, 701 C Street, Box 13, Anchorage, Alaska 99513.

FOR FURTHER INFORMATION CONTACT: Mary Jane Clawson, BLM Alaska State Office, 701 C. Street, Box 13, (907) 271-5060.

On January 27, 1984, the U.S. Army Corps of Engineers, filed an application for the Department of the Air Force to amend Public Land Offer (PLO) 5164 of February 28, 1972, and withdraw the following described lands from all forms of appropriation under the public land laws, including the mining but not the mineral leasing laws.

Kateel River Meridian (Unsurveyed)

T. 7 N., R. 24 E.,

Sec. 13, S2N2S2 and S2S2, those lands lying outside of PLO 3942;
Sec. 14, S2NW4SW4, S2S2, those lands lying outside of PLO 3942;
Sec. 15, S2, S2S2N2;
Sec. 16, E2SE2;
Sec. 21, E2NE4, E2E2SE4;
Sec. 22, those lands lying outside of PLO 5164;
Sec. 23, those lands lying outside of PLOs 3942 and 5164;
Sec. 24, those lands lying outside of PLOs 1910, 3942 and 5164;
Sec. 25, W2E2E2, W2E2, W2, those lands lying outside of PLO 5164;
Sec. 26, those lands lying outside of PLO 5164;
Sec. 27, those lands lying outside of PLO 5164;
Sec. 28, E2NE4NE4;
Sec. 34, N2N2, those lands lying outside of PLO 5164, N2S2N2;
Sec. 35, S2NW4NW4, N2N2N2, those lands lying outside of PLO 5164, S2NE4NE4;
Sec. 36, NW4NE4, N2NW4.

The area described contains approximately 4,108 acres.

The purpose of the withdrawal is to add 4,108 acres of buffer zone to the 447 acres previously withdrawn as Indian Mountain Air Force Research Site under Public Land Order 5164, for an aggregate of 4,555 acres.

For a period of 90 days from the date of publication of this notice, all persons who wish to submit comments, suggestions, or objections in connection with the proposed withdrawal may present their views in writing to the undersigned officer of the Bureau of Land Management.

Notice is hereby given that an opportunity for a public meeting is afforded in connection with the proposed withdrawal. All interested persons who desire a public meeting for the purpose of being heard on the proposed withdrawal must submit a written request to the undersigned officer within 90 days from the date of publication of this notice. Upon determination by the authorized officer that a public meeting will be held, a notice of the time and place will be published in the **Federal Register** at least 30 days before the scheduled date of the meeting.

The application will be processed in accordance with the regulations set forth in 43 CFR Part 2300.

For a period of 2 years from the date of publication of this notice in the **Federal Register**, the lands will be segregated as specified above unless the application is denied or canceled, or the withdrawal is approved prior to that date.

The temporary segregation of the lands in connection with a withdrawal application or proposal shall not affect administrative jurisdiction over the lands, and the segregation shall not have the effect of authorizing any use of the lands by the applicant agency.

Mary Jane Clawson,

Chief, Branch of Lands.

[FR Doc. 85-8873 Filed 4-11-85; 8:45 am]

BILLING CODE 4310-JA-M

[U-52894]

Realty Action; Sale of Public Lands in Beaver County, UT

AGENCY: Bureau of Land Management, Interior.

ACTION: Under section 203 of the Federal Land Policy and Management Act of 1976 (43 U.S.C. 1716) public land described as Lot 2, Sec. 18, T. 29 S., R. 7 W., SLB&M, Utah, containing 40.30 acres, is proposed for sale by competitive bidding at no less than the appraised fair market value of $12,000.00. The lands described are hereby segregated from all forms of appropriation under the public land laws, including the mining laws, pending disposition of this action.

SUMMARY: The purpose of the sale is to dispose of public land that is difficult and uneconomical to manage by a government agency.

DATES: Comments should be submitted by May 28, 1985. The sale will be held on June 18, 1985 at 10:00 am.

ADDRESS: Detailed information concerning the sale, including bidding procedures, is available at the Beaver River Resource Area Office, 444 South Main, Cedar City, Utah, 84720, (801) 586-2458. Comments should also be sent to same address. The sale will be held in the Commission Chambers, Beaver County Courthouse, 105 East Center Street, Beaver, Utah.

SUPPLEMENTARY INFORMATION: The terms and conditions applicable to the sale are:

1. The sale will be for the surface estate only. Minerals will remain with the United States Government.

2. There is reserved to the United States, a right-of-way for ditches or canals constructed by the authority of the United States, Act of August 30, 1980, 26 Stat. 391, 43 U.S.C. 945.

3. Title transfer will be subject to valid existing rights including right-of-way U-44897 held by Utah Power and Light Company and Oil and Gas Lease U-52970.

4. If the public lands are not sold pursuant to this notice they will remain available for sale on a continuing basis until sold.

Any comments received during the comment period will be evaluated and the District Manager may vacate or modify this realty action. In the absence of any action by the District Manager, this realty action notice will be the final determination of the Department of the Interior.

Dated: April 3, 1985.

Morgan S. Jensen,

District Manager.

[FR Doc. 85-8882 Filed 4-11-85; 8:45 am]

BILLING CODE 4310-DQ-M

California Desert District Grazing Advisory Board; Meeting

AGENCY: Bureau of Land Management, Interior Department.

ACTION: Meeting of the California Desert District Grazing Advisory Board.

SUMMARY: Notice is hereby given in acordance with Pub. L. 94-579, Title IV, Section 403, that a public meeting of the California Desert District Grazing Advisory Board will be held on Wednesday, May 15, 1985 from 10 a.m. to 4:30 p.m. in the Ready Room, Herite Inn, 1050 North Norma, Ridgecrest, California 93555.

The agenda for the meeting will include:

—Range Improvement Projects Proposed for FY85

—Grazing Fee Study

—FY85 Desert Plan Amendment Review

—Cooperative Management Agreement and Allotment Management Plan Review

—Wild Horse and Burro Program Update

—Tour of Burro Facilities

The meeting is open to the public wuth time alloted for public comment after each subject has been presented.

Summary Minutes of the meeting will be maintained in the California Desert District and will be available for public inspection during regular business hours within 30 days following the meeting.

For further informaztion and meeting confirmation: Contact the Bureau of Land Management, California Desert District Office, 1695 Spruce street, riverside, California 92507; (714) 351-6398.

Dated: April 5, 1985.

Gerald E. Hijlier,

District Manager.

[FR Doc. 85-8860 Filed 4-11-85; 8:45 am]

BILLING CODE 4310-40-M

[ES-034717, Group 130]

Wisconsin; Notice of Filing of Plat of Survey of Hiatus

April 8, 1985.

1. The plat of the dependent resurvey of the east boundary, Township 29 North, Range 21 East, the west boundary, Township 29 North, Range 22 East, and survey of the subdivisional lines, Township 29 North, Range 21 ½ East, Fourth Principal Meridian, Wisconsin, will be officially filed in the Eastern States Office, Alexandria, Virginia at 7:30 a.m., on May 23, 1985.

2. The dependent resurvey was made at the request of interested landowners.

3. All inquiries or protests concerning the technical aspects of the dependent resurvey must be sent to the Deputy State Director for Cadastral Survey, Eastern States Office, Bureau of Land Management, 350 South Pickett Street, Alexandria, Virginia 22304, prior to 7:30 a.m., May 23, 1985.

4. Copies of the plat will be made available upon request and prepayment of the reproduction fee of $4.00 per copy.

Lane J. Bouman,

Deputy State Director for Cadastral Survey.

[FR Doc. 85-8890 Filed 4-11-85; 8:45 am]

BILLING CODE 4310-01-M

Fish and Wildlife Service

Conference of the Parties to the Convention on International Trade in Endangered Species of Wild Fauna and Flora; Fifth Regular Meeting

AGENCY: Fish and Wildlife Service, Interior.

ACTION: Notice.

SUMMARY: The Service publishes summaries of the United States negotiating positions for the fifth regular meeting of the Conference of the Parties to the Convention on International Trade in Endangered Species of Wild Fauna and Flora.

FOR FURTHER INFORMATION CONTACT: Thomas J. Parisot, Chief, Federal Wildlife Permit Office, U.S. Fish and Wildlife Service, 1000 North Glebe Road, Room 611, Arlington, Virginia 22201. Telephone: (703) 235-1937.

SUPPLEMENTARY INFORMATION:

Background

In accordance with § 23.25 of 50 CFR Part 23, Subpart D, the Service's rules providing for public participation in the development of negotiating positions for meetings of the Conference of the Parties to the Convention on International Trade in Endangered Species of Wild Fauna and Flora [hereinafter referred to as CITES or the Convention], the Service publishes summaries of the United States negotiating positions for the fifth regular meeting of the Conference of the Parties to the Convention ("the meeting") to be held in Buenos Aires, Argentina, April 22 through May 3, 1985.

The Service published summaries of proposed negotiating positions for most of the matters to be addressed at the meeting in the **Federal Register** of February 8, 1985 (50 CFR 5432). The notice also set forth summaries of eleven additional issues. Only one summary proposed negotiating position was published with regard to the eleven additional issues. Information and comments were received with regard to six of these issues at a public meeting conducted by the Service (February 13, 1985) and in writing. Pursuant to § 23.38(a) of the rules, and due to the lack of time necessary to develop proposed negotiating positions on these issues in accordance with the rules, the Director by this notice suspends the applicability of § § 23.32, 23.33, 23.34 and 23.36 as they relate to these additional issues and the circumstances associated therewith.

What follows is a summary of the negotiating positions on the items of the provisional agenda and the additional issues, a summary of written information and comments received in response to the notice of February 8, 1985, and at the above-mentioned public meeting, and a summary of the bases for the negotiating positions which include, if necessary, response to information and comments received. In the interest of time and economy, where the negotiating position is the same as the proposed negotiating position the words "no change" appear together with a brief restatement of the summary proposed negotiating position as it appeared in the February 8, 1985, notice. If information and comments for a particular agenda item were received by the Service in accordance with the February 8, 1985, notice, they are summarized in the "Information and Comments" element associated with the agenda item. If the basis for a proposed negotiating position is changed, but the proposed negotiating position has been adopted without change, the new basis for the negotiating position is stated. Where no elements of a particular agenda item have changed, the words "no change" appear after the number and title of the agenda item follow by a brief restatement of the summary proposed negotiating position as it appeared in the February 8, 1985, notice. Numbers and titles used in this notice correspond to those used in the February 8, 1985, notice. One should consult the notice of August 13, 1984 (49 FR 32263) to better understand the issues and the notice of February 8, 1985, to understand the proposed negotiating positions and their bases.

Negotiating Positions (Summaries)

I. Opening Ceremony by the Authorities of Argentina

(No change.) No position necessary.

II. Welcoming Addresses

(No change.) No position necessary.

III. Establishment of Credentials and Other Committees

(No change.) Seek membership on Credentials and other committees.

IV. Adoption of Agenda and Working Programme

(No change.) Support adoption of the Provisional Agenda and Working Programme.

V. Report of the Credentials Committee

(No change.) Suppport adoption of committee report if it does not recommend exclusion of legitimate representatives.

VI. Adoption of Rules of Procedure

(No change.) Support adoption of the rules.

VII. Admission of Observers

(No change.) Support admission of representatives of all technically qualified observers.

VIII. Matters related to the Standing Committee

Negotiating Position: No change, except that with regard to the division of the Central and South American Region into two regions [South America; and Central America and the Caribbean], support the division, provided such division does not give rise to proposals that would result in a proliferation of regions.

Information and Comments: None received.

Basis of Negotiating Position: Division, which has the support of most of the Latin American countries, might induce more Central American and Caribbean countries to join CITIES. However, a proliferation of regions would increase the costs and workload of the Secretariat and the Parties.

IX. Report of the Secretariat

(No change.) Support the recent changes in the relationship between the Secretariat, the International Union for the Conservation of Nature nd Natural Resources (IUCN) and the United Nations Environment Programme.

X. Financing and Budgeting of the Secretariat and of Meetings of the Conference of the Parties

1. Financial Report for 1983–84 (No change). Commend the Secretariat for economies. Support ratification of the Bonn Financial Amendment. Persuade Parties that have never made financial contributions to do so.

2. Budget for 1986–87 and Medium Term Plan for 1988–89. Negotiating Position: (Change.) The United States believes that the 1986–87 budget should be revised to reflect the current U.S. dollar-Swiss franc exchange rate and will request clarification of the increases proposed for 1986–87 over anticipated Secretariat expenditures.

Information and Comments: None received.

Basis of Negotiating Position: No change, except that recently received information on anticipated 1985 expenditures and the Secretariat's use of the exchange rate in calculating the 1986–87 budget require clarification of that budget.

3. External Funding (No change.) Suppport use of external funding to supplement CITES budget and for specific projects approved by Standing Committee or COP.

4. Headquarters Matters (No change.) Support recently altered headquarters arrangements for the Secretariat. Agree to fair rental payment to IUCN for 1984 if a consensus of Parties supports it.

XI. Relationship With Other International Organizations

(No change.) Support Secretariat efforts to obtain FAO consent to use of Model Phytosanitary Certificate as an optional alternative to CITES certificates of artificial progagation for some controlled specimens.

XII. Committee Reports and Recommendations

1. Technical Committee Report (No change.) Elements of report addressed under other agenda items.

2. Identification Manual Committee Report (No change.) Support continued development of the manual.

3. Nomenclature Committee Report

Negotiating Position: (No change.) Support continuation of work of the committee and clarify committee's role as a consultant on nomenclature issues.

XIII. Interpretation and Implementation of the Convention

1. Report on National Reports Under Article VIII, paragraph 7 of the Convention.

Negotiating Position: (Change) With regard to the European Community (EC) plan to submit a combined annual report for its member countries, the United States believes the EC countries that are also CITES Parties have a legal obligation to report trade between such countries.

(No change.) Support efforts to obtain annual reports from delinquent Parties; support a review of deficiencies of annual reports and possible increase in financial support for the Wildlife Trade Monitoring Unit.

Information and Comments: None received.

Basis of Negotiating Position: No change, except that concerning the EC plan not to report intracommunity trade, the Service has received legal advice from its Solicitor and from the U.S. Department of State indicating that the reporting of intracommunity trade would in no way affect the provisions of the Treaty of Rome or the obligations deriving therefrom.

2. Trade in Ivory From African Elephant

Negotiating Position: (No change.) Support the adoption of an export quota and marking and tracking system for African elephant tusks. (Change.) Support a ban on trade in tusks currently in stock as of a specified date in the future.

Information and Comments: Two commenters supported the quota system, but only if the quotas did not include personally sport-hunted trophies, because a reduction in the number of takings of such trophies would reduce the revenues obtained by some of the African countries from hunting licenses, etc., which are used for game managment and would encourage poaching.

Basis of Proposed Negotiating Position: No change, except that with regard to current stocks of tusks in nonproducer countries, the United States believes that an all encompassing inventory and marking system would be difficult to execute properly. A ban on trade by nonproducing nations is simpler to administer, and more difficult to circumvent.

With regard to excluding sport-hunted trophies from the quotas, the United States believes that the quotas were set on a sustainable yield basis. Thus elephants taken in excess of the quotas, whether for sport hunting or for other uses, could be biologically harmful to the species.

3. Trade in Plant Specimens

Negotiating Position: No change, except that the United States could support use of Model Phytosanitary Certificates and licenses for trade in Appendix I artificially propagated plants provided they are issued or certified by the appropriate Management Authority.

Information and Comments: One commenter opposed the use of phytosanitary certificates in lieu of CITES documents, because it would make it more difficult for importing countries to determine whether CITES certificates were issued by the proper authority in the exporting country.

Basis of Negotiating Position: No change, except that the United States believes that by requiring phytosanitary certificates and licenses to be issued or certified by a Management Authority, it would not be more difficult to determine if the CITES documents were issued by the proper authority in the exporting country and would help assure that the findings upon which the documents were issued were appropriate.

4. Significant Trade in Appendix II Species (No change.) Support adoption of a procedure for identifying species in Appendix II traded in volumes that might be detrimental to their survival.

5. Control of Readily Recognizable Parts and Derivatives.

Negotiating Position: No change, except that the proposed resolution no longer contains a list of readily recognizable parts and derivatives. The resolution now proposes to cover all parts and derivatives readily recognizable from any circumstances, except those specifically agreed to by the Parties. The United States would support this proposal if amended to allow only listings of parts and derivatives of Appendix II and Appendix III plants and Appendix III animals.

Information and Comments: One commenter supported the proposed negotiating position's opposition to a list of readily recognizable parts and derivatives.

Basis of Negotiating Position: No change, except that the United States believes that the proponents of a list of readily recognizable parts and derivatives of Appendix II animals deleted a list from their proposal, because they met with opposition to the list at several Technical Committee meetings. The proposal as currently drafted appears to seek approval of a list in principle, leaving the specifics of a list to a later time. The Article I, paragraph (b) definition of "specimen" only provides for specifying (listing) parts and derivatives of Appendix II and Appendix III plants, and Appendix III animals. It does not provide for specifying parts and derivatives of Appendix I and Appendix II animals.

6. Control of Specimens That Are "Personal or Household Effects" (No change.) Item withdrawn from provisional agenda.

7. Captive Breeding and Long-Maturing Species (No change.) No position necessary. Item withdrawn from the provisional agenda.

8. Definition of "Primarily Commercial Purposes" (No change.) Support a recommendation that would define "primarily commercial purposes" so that unless noncommercial uses clearly predominated, the specimen would be said to be used for primarily commercial purposes. Exclude from consideration the economic nature of the transaction between the country of export and the country of origin.

9. Time Validity of Import Permits.

Negotiating Position: (No change.) Time validity should not be limited to 6 months. If necessary, limit should be 1 year.

Information and Comments: One commenter pointed out that a limit on the time validity of import permits would in effect reduce the 6-month time validity of export permits.

Basis of Negotiating Position: No change, except that the United States opposes any recommendation that would enable the Management Authority of the country of export to deem an import permit time invalid although it was time valid on its face.

10. Definition of Pre-Convention Speciments (No change.) Oppose revocation of Conf. 4.11 which provides, in part, that a change in species status from Appendix II to Appendix I is neither the occasion for establishing a new applicable date nor for allowing trade as Appendix II specimens. Oppose any recommendation that would allow the country of import to refuse a Pre-Convention certificate of exemption because the specimen was acquired after the importing country's applicable date. Each Party should select its Conf. 4.11 applicable date and inform the Secretariat of the date selected.

Information and Comments: One commenter supported the proposed

negotiating position concerning refusal of a Pre-Convention certificate by the country of import based on the application of its applicable date, and concerning selection of an applicable date by each Party.

Basis of Proposed Negotiating Position: (No change.)

11. A CITES Register of Traders in Live Specimens of Wild Fauna (No change.) Oppose adoption of an international register of wildlife traders.

12. Interpretation of Article VII, Paragraphs 4 and 5 (Exemptioin for Captive-Bred and Artificially Propagated Specimens) (No change.) This item was eliminated from the provisional agenda.

13. Relationship between CITES Transport Guidelines for Live Animals and IATA Live Animals Regulations (No change.) Support establishment of effective liaison between the Technical Committee and the IATA Live Animals Board in order to assure that the IATA Live Animals Regulations are consistent with the humane transport concerns of CITES.

XIV. General Matters of Principle Relating to the Appendices

1. Ten Year Review of the Appendices (No change). Support completion of the Ten Year Review.

2. Criteria for the Inclusion of Species in Appendix III (No change). Oppose any attempt to limit right of any Party listing Appendix III species to restrict export to a greater degree than provided by CITES. Support the proposition that a Party can only list in Appendix III its resident species. Support development of a list of Appendix III species covered in "higher taxa" listings.

XV. Consideration of Proposals for Amendment of Appendices I and II

This item is being addressed in a separate **Federal Register** notice.

XVI. Conclusion of the Meeting

1. Determination of the Time and Venue of the Next Regular Meeting of the Conference of the Parties (No change). Favor holding COP 6 in the Pacific area.

2. Closing Remarks (No change). No position necessary.

Additional Issues

1. Extraordinary Meeting

The calls for an extraordinary meeting by Canada (legal personality) and Peru (commercial trade in Vicuna products) did not receive support from at least ⅓ of the Parties. Therefore, the Secretariat could not convene an extraordinary meeting in connection with COP 5. The United States had supported the Canadian request.

2. Consideration of the criteria for amendment of Appendices I and II

Negotiating Position: (No change). Favor relaxation of the Berne Criteria for downlisting species from Appendix I to Appendix II but only for species listed at the Washington Conference and only allow relaxation no later than COP 7. Oppose the imposition of quotas to qualify for downlisting under relaxed criteria. Instead, favor use of the Berne Appendix II listing criteria and a showing that there is an effective management program for the species and that its trade will not reduce CITES controls on other species.

Information and Comments: One commenter opposed relaxation of the Berne downlisting criteria, because the resolution does not state specifically which decision-making procedures would be applicable to the downlisting and the setting of quotas. The criteria for downlisting stated in the resolution were vague ("one can take for granted that the populations of such taxon can withstand a certain level of exploitation for commercial trade").

Basis of Negotiating Position: The Berne Criteria were not in existence for use in the listings at the Washington Conference. Some species may have been inappropriately listed at that time. The Berne Criteria should be relaxed to increase the chances for downlisting of those species to Appendix II, but not relaxed to the point where there are no substantive information requirements. The United States favors use of the Berne listing requirements and trade and management safeguards to assure that downlisting and commercial trade are appropriate. Since the Berne listing criteria were available for use in the listing decisions made at Berne (COP 1) and all subsequent meetings, relaxation should not be available for species listed at those meetings. The United States favors terminating relaxation immediately after COP 7 in order to restore the integrity of the Berne Criteria as soon as possible while affording sufficient opportunity for use of the special relaxation criteria. There is no indication that the resolution for relaxation would apply anything other than the normal listing procedures of Article XV to proposals eligible for relaxation.

3. Trade in Ranched Specimens

Negotiating Position: Support adoption of the U.S. proposal for a uniform marking system for ranched specimens to facilitate enforcement and administration. Product units whose marks were eliminated for ligitimate reasons in a country of reexport would have to be marked again. Nonparties would have to use the same marking system as Parties. Standardized reporting and monitoring procedures should be developed by the Secretariat to assure that an approved ranching operation continues to meet the requirements of Conf. 3.15.

Information and Comments: One commenter supported the U.S. proposal as feasible and reasonable. Another felt that it was a commendable concept, but questioned its feasibility for all types of ranching operations and saw a danger that disputes over marking could be used to restrict or eliminate trade. This commenter favored marking guidelines rather than mandatory requirements at this time. Another commenter suggested that the Parties and experts study the issue and report back to COP 6. The U.S. proposal could be a basis for such study.

Basis of Negotiating Position: Conf. 3.15 requires marking of ranched products. It would be difficult for administrative and enforcement officials to be current on many nonstandardized marking systems. A marking system in the form of guidelines would allow variations in systems that would diminish the advantages of uniformity. The United States believes that marking systems have been studied and applied sufficiently to allow a uniform marking system for ranched specimens to become operable after COP 5. Any problems with the system can be brought to the attention of the Technical Committee for resolution. A standardized reporting and monitoring system would facilitate such reporting and monitoring.

4. Regular review of alleged infractions

Negotiating Position: The United States supports a resolution that would direct the Technical Committee in cooperation with the secretariat to investigate infractions and report in writing to the next COP if the Party concerned has not satisfactorily corrected the infraction. However, the United States would amend the resolution to include mention of Article XIII procedures which allow the alleged violator an opportunity to rebut the charges and allow other procedures and to expand the Technical Committee's report to include infractions that have been satisfactorily corrected.

Information and Comments: None received.

Basis of Negotiating Position: The proposed resolution could stimulate the Technical Committee and Secretariat to more actively pursue their mandate to

monitor operation of the Convention and provide more complete reports on Article XIII measures taken. An alleged violator should be given an opportunity to rebut the charges. Reporting infractions that have been satisfactorily corrected would give credit to those who have successfully corrected the infractions.

5. Interpretation of "the text of the proposed amendment"

Negotiating Position: The United States supports the Secretariat's view that an acceptable proposal to amend the species appendices is one that includes a substantially complete supporting statement. By analogy this view should also be applied to draft resolutions and other documents for meetings of the COP.

Information and Comments: None received.

Basis of Negotiating Position: The purpose of requiring a proposal to be submitted 150 days (330 for ranching) before the meeting of the Conference of the Parties is to allow the Parties and the Secretariat sufficient time to review the proposal and to circulate their comments so that the decision at the COP will be an informed one. Failure to submit a substantially complete supporting statement could defeat this purpose.

6. Endorsement in principle of a convention for the protection of animals

Negotiating Position: The United States shares the concerns of those in terested in the humane treatment of animals, but the Parties should be able to review the finalized text of the convention before considering endorsement.

Information and Comments: One commenter opposed any endorsement as being too potentially divisive and harmful to CITES operations. Another commenter supported endorsement.

Basis of Negotiating Position: Endorsement without knowing the details of such a convention would be unwise. It could in its final form contain provisions which are not proper management procedures for U.S. wildlife.

7. Nomenclature and taxonomy used in the appendices

Negotiating Position: Support the use of *Mammal Species of the World: A Taxonomic and Geographic Reference* as guidance to the CITES Secretariat on the nomenclature and taxonomy to be used for the appendices with regard to mammals. Discourage the use of alternative sources of guidance in the interest of effectively and uniformly implementing the Convention.

Information and Comments: None received.

Basis of Negotiating Position: At COP 4, the Parties agreed to use *Mammal Species of the World:* as the standardized nomenclatural reference for mammals. Certain German-speaking states have objected to using this reference because it does not match other references they are accustomed to using and would require changes in some of their electronic data processing and identification manuals. Such internal problems should not cause the COP to abandon its previous decision. Instead, objections from German-speaking states should be handled within the CITES Nomenclature Committee through the periodic updating that is planned for *Mammal Species of the World.*

8. Trade in leopard skins

Negotiating Position: No change, except that the United States supports the proposals of Zimbabwe, Zambia, and Tanzania to increase their export quotas to 350, 300 and 250 respectively. Oppose alternative proposals to allow them to set their own quotas without review by the COP.

Because of the provision of the Endangered Species Act, the United States is not in a position to support the importation of tourist souvenirs in the absence of clear evidence that such trade benefits the conservation of the species. The United States will seek information to assess the effectiveness of the system and to consider changes in Service regulations to allow limited import of tourist souvenirs.

Information and Comments: One commenter would oppose quotas if they included sport-hunted trophies, because a limitation on hunting would reduce revenues used for game management. Another commenter suggested that subquotas should be established within each quota for sale as curios and for hunting trophies to prevent trade in curios from using up the quota resulting in a loss of game management revenues.

Basis of Negotiating Position: No change, except that the United States could support a subquota for trophies and curios within a soundly based quota system. However, the United States believes that the quotas proposed for Zimbabwe, Zambia and Tanzania were set to include sport-hunted trophies. It is likely that those countries have considered the effect of placing a limitation on sport-hunted trophies on revenues and on the species.

9. Interpretation of Article XIV, paragraph 1

Negotiating Position: The United States could support a call for a review by each Party of stricter domestic measures on commercial trade in Appendices II and III species, but it is opposed to justifying continued application of domestic measures to the COP.

Information and Comments: One commenter supported the U.S. position.

Basis of Negotiating Position: Parties should review their stricter domestic measures in order to keep them current, but Article XIV, paragraph 1, places no restrictions on a Party's right to take stricter domestic measures. The proposed resolution, which would subject those Parties that take stricter domestic measures to a charge of violating the spirit of the Convention, would be a restriction on that right and could be divisive in terms of the future of CITES.

10. Guidelines for the Secretariat When Making Recommendations in Accordance with Article XV

Negotiating Position: The United States could support in principle a proposal to require the Secretariat to cite references for data used in making its recommendations on species listing proposals but believes that the matter can be handled without a formal resolution. Support the Secretariat's freedom to make recommendations that it deems appropriate whether or not published data are available.

Information and Comments: None received.

Basis of Negotiating Position: Citations would help the Parties evaluate the Secretariat's recommendations. Perhaps the Parties should have a similar obligation when making their comments on species proposals. The United States supports a strong and independent Secretariat in keeping with its responsibilities under CITES.

11. Cayman Turtle Farm (CTF)

Negotiating Position: The United States would consider supporting a resolution characterizing products of CTF as from specimens bred in captivity, but believes that treatment of CTF as a ranch under Conf. 3.15 is more appropriate.

Information and Comments: Two commenters agreed with the U.S. position, one of these noted that CTF no longer takes specimens from the wild. Seven commenters opposed any commercial trade in CTF products, primarily because it would weaken

conservation efforts for sea turtles. One of the seven commenters stated that approval should be delayed until scientific research shows that ranching will benefit the species.

Basis of Negotiating Position: While recognizing that CTF products might stimulate demand to a point at which it encourages illegal trade, the United States proposal for uniform marking, reporting and monitoring procedures should reduce the likelihood of such trade. CTF is conducting research intended to benefit the species.

Additional Items

1. Effects of Reservations

Although the effects of reservations to species listings is not a specific agenda item for COP 5, the United States believes that those Parties that have taken reservations should review them to determine if they should be withdrawn. The United States intends to discuss this issue with those reserving Parties attending COP 5, particularly those that have been trading substantial quantities of Appendix I specimens.

2. Certificates of Origin for Appendix III Specimens

This issue was inadvertently omitted from the notice of February 8, 1985. It was raised at the February 13, 1985, meeting. The issue is whether officials other than CITES Management Authorities (or nature conservation authorities in the case of nonparties) can issue certificates of origin for Appendix III specimens under the terms of CITES.

Negotiating Position: Under the terms of the Convention, customs or other officials that are not Management Authorities may not issue CITES Appendix III certificates of origin.

Informaiton and Comments: None received.

Basis of Negotiating Position: Article IX, paragraph 2, and Article VI, paragraphs 1 and 3, taken together stand for the proposition that only designated Management Authorities competent to grant CITES permits and certificates (including Appendix III certificates of origin) may do so.

This notice was prepared by Arthur W. Lazarowitz, Federal Wildlife Permit Office.

Dated: April 8, 1985.

Robert A. Jantzen,

Director, Fish and Wildlife Service.

[FR Doc. 85-8867 Filed 4-11-85 8:45 am]

BILLING CODE 4310-55-M

Minerals Management Service

Receipt of Development Operations Coordination Document; Tenneco Oil Exploration and Production

AGENCY: Minerals Management Service, Interior.

ACTION: Notice of the Receipt of a Proposed Development Operations Coordination Document (DOCD).

SUMMARY: Notice is hereby given that Tenneco Oil Exploration and Production has submitted a DOCD describing the activities it proposes to conduct on Lease OCS 0593C, Block 198, Ship Shoal Area, offshore Louisiana. Proposed plans for the above area provide for the development and production of hydrocarbons with support activities to be conducted from an onshore base located at Fourchon, Louisiana.

DATE: The subject DOCD was deemed submitted on April 3, 1985.

ADDRESSES: A copy of the subject DOCD is available for public review at the Office of the Regional Director, Gulf of Mexico OCS Region, Minerals Management Service, 3301 North Causeway Blvd., Room 147, Metairie, Louisiana (Office Hours: 9 a.m. to 3:30 p.m., Monday through Friday).

FOR FURTHER INFORMATION CONTACT: Mr. Michael J. Tolbert; Minerals Management Service; Gulf of Mexico OCS Region; Rules and Production; Plans, Platform and Pipeline Section; Exploration/Development Plans Unit; Phone (504) 838-0875.

SUPPLEMENTARY INFORMATION: The purpose of this Notice is to inform the public, pursuant to section 25 of the OCS Lands Act Amendments of 1978, that the Minerals Management Service is considering approval of the DOCD and that it is available for public review.

Revised rules governing practices and procedures under which the Minerals Management Service makes information contained in DOCDs available to affected states, executives of affected local governments, and other interested parties became effective December 13, 1979, (44 FR 53685). Those practices and procedures are set out in revised § 250.34 of Title 30 of the CFR.

Dated: April 3, 1985.

John L. Rankin,

Regional Director, Gulf of Mexico OCS Region.

[FR Doc. 85-8883 Filed 4-11-85; 8:45 am]

BILLING CODE 4310-MR-M

INTERSTATE COMMERCE COMMISSION

[Finance Docket No. 30636]

CSX Corporation—Exemption—Issuance of Notes

AGENCY: Interstate Commerce Commission.

ACTION: Notice of Exemption.

SUMMARY: The Interstate Commerce Commission exempts CSX Corporation from the requirements of 49 U.S.C. 11301 for the issuance of up to $150,000,000 of medium term notes.

DATES: This exemption is effective on April 11, 1985. Petitions to reopen must be filed by May 2, 1985.

ADDRESSES: Send pleadings referring to Finance Docket No. 30636 to:

(1) Office of the Secretary, Case Control Branch, Interstate Commerce Commission, Washington, DC 20423

(2) Petitioner's representative: David W. Yearwood, 500 Water Street, Jacksonville, FL 32202

FOR FURTHER INFORMATION CONTACT: Louis E. Gitomer, (202) 275-7245

SUPPLEMENTARY INFORMATION: Additional information is contained in the Commission's decision. To purchase a copy of the full decision write to T.S. InfoSystems, Inc., Room 2227, Interstate Commerce Commission, Washington, DC 20423, or call 289-4357 (DC Metropolitan area) or toll free (800) 424-5403.

Decided: April 3, 1985.

By the Commission, Chairman Taylor, Vice Chairman Gradison, Commissioners Sterrett, Andre, Simmons, Lamboley and Strenio.

James H. Bayne,

Secretary.

[FR Doc. 85-8906 Filed 4-11-85; 8:45 am]

BILLING CODE 7035-01-M

DEPARTMENT OF LABOR

The Steering Subcommittee of the Labor Advisory Committee for Trade Negotiations and Trade Policy; Meeting

Pursuant to the provisions of the Federal Advisory Committee Act (Pub. L. 92-463 as amended), notice is hereby given of a meeting of the Steering Subcommittee of the Labor Advisory Committee for Trade Negotiations and Trade Policy.

Date, time and place: May 14, 1985, 9:30 a.m., Rm. S4215 A & B Frances Perkins Department of Labor Building, 200 Constitution Avenue, NW., Washington, D.C. 20210

Purpose: To discuss trade negotiations and trade policy of the United States.

This meeting will be closed under the authority of Section 10(d) of the Federal Advisory Committee Act. The Committee will hear and discuss sensitive and confidential matters concerning U.S. trade negotiations and trade policy.

FOR FURTHER INFORMATION CONTACT: Fernand Lavallee, Executive Secretary, Labor Advisory Committee, Phone: (202) 523-6565, April 8, 1985.

Signed at Washington, D.C. this 8th day of April 1985.

Robert W. Searby,

Deputy Under Secretary, International Affairs.

[FR Doc. 85-8897, Filed 4-11-85; 8:45 am]

BILLING CODE: 4510-28-M

Occupational Safety and Health Administration

Agency Guidelines on Biotechnology

AGENCY: Occupational Safety and Health Administration (OSHA), Labor.

ACTION: Announcement of guidelines on occupational safety and health in the field of biotechnology and request for public comment.

SUMMARY: OSHA has reviewed its responsibilities under the Occupational Safety and Health Act of 1970 (29 U.S.C. 651 et seq.) as they relate to the protection of the safety and health of workers in the rapidly developing field of biotechnology. Section 8 of the Act authorizes OSHA to inspect workplaces including laboratories and places of employment relating to biotechnology. Section 5(a)(1) of the Act requires that each employer furnish to each of his employees employment and a place of employment which are free from recognized hazards that are causing or are likely to cause death or serious physical harm.

OSHA has determined that this general duty clause, together with several specific standards, currently provides an adequate and enforceable basis for protection the safety and health of employees in the field of biotechnology. No additional regulation of workplaces using biotechnology appears to be needed at this time, since no hazard of hazards from biotechnology per se have been identified. However, if any of the new biotechnology processes cause hazardous working conditions that result in a significant risk of death or serious harm to workers, OSHA will consider regulating unless the worker exposure is effectively controlled under current OSHA standards or another agency has exercised its authority over health and safety mattters for those working conditions. Guidelines contained in this notice are provided to: (1) Clarify the relationship of the existing statute to the field of biotechnology, and (2) reiterate commonly employed laboratory safety practices.

DATE: The docket for this guideline, H-042, will remain open for comment until August 12, 1985.

ADDRESS: All comments should be sent to Docket Office, Docket No. H-042, OSHA, Room N-3670, United States Department of Labor, 200 Constitution Ave., NW., Washington, D.C. 20210.

FOR FURTHER INFORMATION CONTACT: James F. Foster, Director, Office of Information and Consumer Affairs, Occupational Safety and Health Administration, Room N-3637, U.S. Department of Labor, 200 Constitution Avenue, N.W. Washington, D.C. 20210. Telephone: (202) 523-8151.

SUPPLEMENTARY INFORMATION:

A. Background

The Cabinet Council on Natural Resources and the Environment formed a Working Group on Biotechnology which first met in April 1984. The Office of Science and Technology Policy of the Executive Office of the President was selected to coordinate the Working Group which is composed of several Federal agencies.

A "Proposal for a Coordinated Framework for Regulation of Biotechnology" was published in the **Federal Register**, Volume 49, Number 252, Monday, December 31, 1984, pages 50856-50907. The Proposal included a matrix of applicable laws and regulations and statements by the Food and Drug Administration, Environmental Protection Agency and the United States Department of Agriculture. Although OSHA's authorities in biotechnology were contained in the "Regulatory Matrix" (pages 50864-50865), the statement of policy and request for public comment presented here were developed to clarify the policies of this agency.

Biotechnology is the application of biological systems and organisms to technical and industrial processes. The technologies employed in this area include, but are not limited to:

(1) Classical genetic selection and/or breeding for purposes such as developing bakers yeast, conventional fermentation and vaccine development;

(2) The direct in vitro modification of genetic material, e.g., recombinant DNA or gene splicing; and,

(3) Other novel techniques for modifying genetic material of living organisms, e.g., cell fusion and hybridoma technology.

Modern biotechnology is analogous to other conventional industrial processes and has great potential benefit to society and wide application to numerous industries. It is considered by some to have economic potential comparable to the microprocessor industry. Genetic engineering has a wide spectrum of applications of commercial importance, but many such applications are in the early stages of development or have been expressed only as concepts.

The Occupational Safety and Health Administration

The Occupational Safety and Health Act of 1970 (OSH Act) grants the Secretary of Labor broad power to require employers to provide a safe and healthful workplace for their employees. Where other Federal agencies exercise their statutory authority to prescribe or enforce standards or regulations affecting occupational safety or health, OSHA is preempted by section 4(b)(1) of the Act.

Section 5(a)(1) of the Act requires employers to furnish their employees with a workplace "free from recognized hazards that are causing or are likely to cause death or serious physical harm." Section 5(a)(2) requires employers to comply with safety and health standards set by the Secretary. The Secretary in establishing standards to deal with toxic materials and harmful physical agents is required by the OSH Act to "set the standard which most adequately assures, to the extent feasible, on the basis of the best available evidence, that no employee will suffer material impairment of health or functional capacity even if such employee has regular exposure to the hazard dealt with by such standard for the period of his working life" (section 6(b)(5)). Under a recent Supreme Court decision permanent standards can be promulgated only upon a finding by the Secretary that the standard is reasonably necessary to remedy a significant risk of material health impairment. Finally, emergency temporary standards may be promulgated only upon a finding that employees are "exposed to grave danger." (Section 6(c)(1))

In view of the statutory criteria briefly outlined above and the current known hazards from biotechnology processes there does not appear to be a need for new OSHA regulations. Furthermore, the biotechnology processes, whether present in laboratories, pilot projects or

industrial plants, usually involve conventional chemicals and processes that are already covered by OSHA regulations. These conventional processes use solvents or products, some of which may be toxic or dangerous to employee health in certain dosages over certain periods of time. The potentially hazardous character of some aspects of biotechnology is primarily from the chemicals used and not the biotechnology products. Therefore, the regulations that effectively regulate chemical exposures will usually ensure that biohazards, too, will be controlled. However, when a process employing biotechnology alone or in combination with conventional chemicals and technology presents a significant hazard to employees which cannot be dealt with by existing standards or the general duty clause, OSHA will consider regulating in order to protect employee health. At this time, no new regulations that would specifically cover biohazards are warranted.

B. Guidelines

As stated above, section 5(a) of the OSH Act requires that each employer—

(1) Shall furnish to each of his employees employment and a place of employment which are free from recognized hazards that are causing or are likely to cause death or serious physical harm to his employees;

(2) Shall comply with occupational safety and health standards under this Act.

Specific standards which may be applicable include:

- Specific air contaminants (29 CFR Part 1910, Subpart Z).
- Access to employee exposure and medical records (29 CFR 1910.20).
- Hazard communication (29 CFR 1910.1200).
- Exposure to toxic chemicals in laboratories (currently in draft and under development).
- Respiratory protection (29 CFR 1910.134) (currently being updated).
- Safety standards of a general nature, for example, general environmental, walking and working surfaces, fire protection, compressed gases, electrical safety, and material handling and storage contained in 29 CFR Part 1910 Subparts J, D, E and L, H, S and N).

Effective biological safety and health programs have been operative in a variety of laboratories for many years. Motivation and critical judgment are necessary in addition to specific safety and health knowledge to ensure protection of personnel, the public and the environment. All personnel directly involved in biotechnological projects should receive adequate instruction so that the potential biohazards can be understood and appreciated. Emergency plans should be formulated for each project where the chemicals used or biotechnical product produced pose a potential safety or health hazard. The plans should describe the procedures to be followed if an accident contaminates personnel or workplaces. If a research group is working with a known pathogen for which an effective vaccine is available, employees should be immunized, as appropriate.

Before biotechnological work is undertaken, it is important that management determine the potential hazards involved and the precautions to be taken. Program and support staff should then be advised of the real and potential hazards. Staff should be instructed and trained in the protection and techniques required to ensure safety and in the procedures for dealing with accidentally created hazards.

C. Public Participation

Public comment on these guidelines is encouraged. Interested persons are invited to submit written data, views and arguments related to the Guidelines on Biotechnology. These comments must be postmarked on or before 120 days and submitted to the Docket Office, Docket No. H-042, OSHA, Room N-3670, United States Department of Labor, 200 Constitution Ave., NW., Washington, D.C. 20210. The data, views and arguments that are submitted will be made available for public inspection and copying at the above address.

Signed at Washington, D.C. this 3rd day of April, 1985.

Robert A. Rowland,

Assistant Secretary of Labor.

[FR Doc. 85-8197 Filed 4-11-85; 8:45 am]

BILLING CODE 4510-26-M

NATIONAL FOUNDATION ON THE ARTS AND THE HUMANITIES

Humanities Panel; Meetings

AGENCY: National Endowment for the Humanities.

ACTION: Notice of meetings.

SUMMARY: Pursuant to the provisions of the Federal Advisory Committee Act (Pub. L. 92-463, as amended), notice of the Humanities Panel will be held at the Old Post Office, 1100 Pennsylvania Avenue NW., Washington, D.C. 20506.

Date: April 26, 1985.

Time: 8:30 a.m. to 5:30 p.m.

Room: 316-2.

Program: This meeting will review Summer Seminars for College Teachers applications in Foreign and Comparative Literature, submitted to the Division of Fellowships and Seminars, for projects beginning after May 1, 1986.

Date: April 29, 1985.

Time: 8:30 a.m. to 5:30 p.m.

Room: 316-2.

Program: This meeting will review Summer Stipends for College Teachers applications in History, submitted to the Division of Fellowships and Seminars, for projects beginning after May 1, 1986.

Date: April 30, 1985.

Time: 8:30 a.m. to 5:30 p.m.

Room: 316-2.

Program: This meeting will review Summer Seminars for College Teachers applications in Art, submitted to the Division of Fellowships and Seminars, for projects beginning after May 1, 1986.

The proposed meetings are for the purpose of Panel review, discussion, evaluation and recommendation on applications for financial assistance under the National Foundation on the Arts and the Humanities Act of 1965, as amended, including discussion of information given in confidence to the agency by grant applicants. Because the proposed meetings will consider information that is likely to disclose: (1) Trade secrets and commercial or financial information obtained from a person and privileged or confidential; (2) information of a personal nature the disclosure of which would significantly frustrate implementation of proposed agency action; pursuant to authority granted me by the Chairman's Delegation of Authority to Close Advisory Committee Meetings, dated January 15, 1978, I have determined that these meetings will be closed to the public pursuant to subsections (c) (4), (6), and (9)(B) of section 552b of Title 5, United States Code.

Further information about these meetings can be obtained from Mr. Stephen J. McCleary, Advisory Committee Management Officer, National Endowment for the Humanities, Washington, D.C. 20506, or call (202) 786-0322.

Stephen J. McCleary,

Advisory Committee Management Officer.

[FR Doc. 85-8796 Filed 4-11-85; 8:45 am]

BILLING CODE 7536-01-M

NATIONAL SCIENCE FOUNDATION

Presidential Young Investigator Awards; Announcement of Competition

The National Science Foundation announces the competition for Presidential Young Investigator Awards to be announced in February 1986.

These awards provide cooperative research support for the Nation's most outstanding and promising young [1] science and engineering faculty. With participation of the industrial sector, the awards are intended to improve the capability of universities to respond to the demand for highly qualified scientific and engineering personnel for academic and industrial research.

A maximum of 100 new Presidential Young Investigator Awards will be made in this competition. At least half of these awards will be made in engineering fields. Awards will be made for up to five years based on the annual determination of satisfactory performance and subject to the availability of funds.

In this competition there will be two types of nominations. The distinction between the two lies in the nomination procedure only and not in the nature of the award. Scientists and engineers who have received or are about to receive their doctoral degrees may be nominated for *faculty awards* by eligible institutions who have appointed or plan to appoint them to tenure track faculty positions. In addition, graduate students currently nearing their doctoral degrees, postdoctoral students, and other recent doctoral recipients without faculty affiliation may be nominated for *prefaculty awards* tenable at an appropriate eligible institution. Institutions offering tenure track positions to recipients of *prefaculty awards* are expected to assume the same commitments as those associated with *faculty awards*.

Because this program is aimed particularly at influencing young scientists and engineers in their decisions regarding academic careers, the Foundation strongly encourages the nomination for *prefaculty awards* of outstanding graduate students nearing completion of their gradute work.

Eligibility

U.S. institutions granting doctorates in at least one of the fields supported by the Foundation[2] are eligible to participate in this program. Nominations may be submitted from any science or engineering department in an eligible institution.

Eligible institutions may nominate, for *faculty awards*, both current and prospective members of their faculty who are early in their careers, and who are holding or have been offered tenure track positions as of the time of nomination.

Eligible institutions may also nominate their promising graduate students and recent doctoral recipients for *prefaculty awards*. Such awards are tenable only in tenure track positions at eligible institutions.

In either case, nominees must have received their doctorates after January 1, 1982. However, scientists and engineers who received their doctoral degrees in 1981 and have had at least one year of full-time industrial employment beyond the doctorate, or who received their doctoral degrees in 1980 and have had at least two years of full-time industrial employment beyond the doctorate are also eligible for nomination.

U.S. citizens or individuals who are permanent residents as of the time of nomination are eligible to receive these awards.

Those nominated may conduct research in any branch of science and engineering normally supported by NSF. Particular emphasis in the selection of awards will be given to the mathematical, physical and biological sciences and engineering where there are substantial needs for faculty development.

Support and Commitments

Minimum Presidential Young Investigator Awards will consist of $25,000 of Federal funds per year. However, in accordance with the objective of developing improved links between the academic and industrial sectors, the Foundation will provide up to $37,500 of additional funds per year on a dollar-for-dollar matching basis to contributions from industrial sources (normally private, for-profit corporations), resulting in total possible annual support of up to $100,000.

Because industry matching in fields of interest to it is central to the program goals of leveraging Federal funds and fostering industry-university cooperation, NSF expects that matching funds will be obtained in most cases from private, for-profit corporations. However, because industrial funds may be difficult to obtain for some areas of research not in the mainstream of industrial interests, matching funds may be accepted from private non-profit foundations (other than foundations associated with particular universities or university systems). A grantee institution must certify in its budget submission that the matching funds have been specifically designated by the donor for the PYI award.

Matching funds may be either in cash or permanent research equipment. The equipment must be of a type and quality necessary to carry out the awardee's research program. The worth of equipment donations should be based on its fair market value.

Funds meeting the foregoing criteria which have been expended in support of a nominee's research effort after the closing date of this competition may be designated as matching funds.

Institutions are also expected to make a significant commitment to the support of their awardees. Institutions are responsible for arranging for the industrial support and guaranteeing full academic year salary for the awardee. None of the Presidential Young Investigator funds, whether provided by the Foundation or by industry, may be used to underwrite academic year salaries of awardees. However, up to 10 percent of the Foundation funds may be used to defray administrative expenses in lieu of indirect costs.

Application Procedures

Nominations for *faculty awards* originate from the departmental chairperson or analogous administrative officer of the sponsoring institution. Nominations for prefaculty awards originate from the departmental chairperson or analogous institutional officer of the academic department where the nominee's doctoral studies are being or were carried out.

Each nomination submission must include:

- The Nomination Form provided. For a *faculty award* nomination, the Form includes a statement signed by an official authorized to make an institutional commitment to guarantee the nominee's academic year salary and to seek matching industrial support. *Prefaculty* nominations need only be signed by the nominating official.
- A complete, up-to-date *Curriculum vitae*, including a one-page description of the nominee's research interests; a list of prior and current research grants, including sources and amounts; and a bibliography of the nominee's publications in refereed journals indicating by means of an asterisk those of which the nominee is senior author (a complete or partial list of other publications may be attached where it

[1] "Young" in this context refers to academic age, as determined by time elapsed since receipt of the doctorate.

[2] See NSF 83-57, *Grants for Scientific and Engineering Research*

may materially strengthen the nomination);

• A statement, signed by the nominee, regarding plans for his or her academic career and signifying the intent to implement them if given a Presidential Young Investigator award; and

• Recommendations from three referees who are familiar with the research interests and capability of the nominee. *Referees for faculty award* nominations may not be from the nominating institution.

After an awardee has been selected, the employing institution will be asked to prepare a first-year budget in support of the awardee's research activities. The budget should show both the amount requested from the Foundation and the sources and amounts of industrial support. This information will be used in determining the amount of the award and other terms and conditions. Except as otherwise provided in this announcement, the terms and conditions, as well as the expected institutional commitment, will be analogous to those stated in the publication, NSF 83-57, *Grants for Scientific and Engineering Research.* Similar submissions will be required annually for each successive year of support under this program.

Presidential Young Investigator Awardees will be expected to begin their tenure by October 1 of the year of their awards.

Evaluation and Selection

Selection will be based on an evaluation of the nominee's ability and potential for contributing to the future vitality of the Nation's scientific and engineering effort as evidenced by accomplishments, including contributions of original research and in the training of future scientists and engineers. Recommendations; suitability of the sponsoring institution for the implementation of the nominee's plans for his or her research and academic career (where applicable); probable impact of the award on the future career development of the nominee; scientific quality of the research likely to emerge; and the potential impact of the award on the research field in question will be considered. In the case of *prefaculty nomination,* particular attention will be paid to evidence of the nominee's ability to conduct independent quality research. The selection of individuals to receive Presidential Young Investigator Awards will be made by the National Science Foundation with the advice of panels of outstanding scientists and engineers.

Inquiries

Inquiries regarding the awards may be addressed to the Presidential Young Investigator Awards, National Science Foundation, Washington, D.C. 20550, or telephoned inquiries to (202) 357-7536.

Michael M. Frodyma,

Program Director, Postdoctoral Fellowships.

April 9, 1985.

[FR Doc. 85-8878 Filed 4-11-85; 8:45 am]

BILLING CODE 7555-01-M

Advisory Panel for Archaeology/Physical Anthropology; Meeting

In accordance with the Federal Advisory Committee Act, Pub. L. 92-463, as amended, the National Science Foundation announces the following meeting:

Name: Advisory Panel for Archaeology/Physical Anthropology.

Date and Time: April 29-May 1, 1985; 9:00 a.m.-5:00 p.m.

Place: Holiday Inn (Downtown), Denver, CO.

Type of Meeting: Closed.

Contact Person: Dr. John E. Yellen, Program Director for Anthropology, Room 320, National Science Foundation, Washington, DC 20550, (202) 357-7804.

Purpose of Advisory Panel: To provide advice and recommendations concerning support for archaeology.

Agenda: To review and evaluate research proposals as part of the selection process for awards.

Reason for Closing: The proposals being reviewed include information of a proprietary or confidential nature, including technical information, financial data, such as salaries, and personal information concerning individuals associated with the proposals. These matters are within exemptions (4) and (6) of 5 U.S.C. 552b(c), Government in the Sunshine Act.

Authority to Close Meeting: This determination was made by the Committee Management Officer pursuant to provisions of section 10(d) of Pub. L. 92-463. The Committee Management Officer was delegated the authority to make such determinations by the Director, NSF, on July 6, 1979.

April 9, 1985.

M. Rebecca Winkler,

Committee Management Officer.

[FR Doc. 85-8877 Filed 4-11-85; 8:45 am]

BILLING CODE 7555-01-M

Advisory Panel for Eukaryotic Genetics; Meeting

In accordance with the Federal Advisory Panel Act, as amended, Pub. L. 92-463, the National Science Foundation announces the following meeting.

Name: Advisory Panel for Eukaryotic Genetics.

Date and time: Monday and Tuesday, April 29th and 30th, 1985 from 8:30 a.m. to 5:00 p.m.

Place: Room 1242, National Science Foundation, 1800 G Street, N.W. Washington, D.C. 20550.

Type of Meeting: Closed.

Contact Person: Dr. Delill Nasser, Program Director, Eukaryotic Genetics, Room 329G Telephone: 202/357-0112.

Purpose of Advisory Panel: To provide advice and recommendations concerning support for research.

Agenda: To review and evaluate research proposals as part of the selection process for awards.

Reason for Closing: The proposals being reviewed include information of a proprietary or confidential nature, including technical information; financial data, such as salaries; and personal information concerning individuals associated with the proposals. These matters are within exemptions (4) and (6) of 5 U.S.C. 552b(c), Government in the Sunshine Act.

Authority to Close Meeting: This determination was made by the committee Management Officer pursuant to provisions of section 10(d) of Pub. L. 92-463. The panel Management Officer was delegated the authority to make such determinations by the Director, NSF, on July 6, 1979.

Rebecca Winkler,

Committee Management Officer.

April 9, 1985.

[FR Doc. 85-8875 Filed 4-11-85; 8:45 am]

BILLING CODE 7555-01-M

Advisory Panel for Prokaryotic Genetics; Meeting

In accordance with the Federal Advisory Panel Act, as amended, Pub. L. 92-463, the National Science Foundation announces the following meeting:

Name: Advisory Panel for Prokaryotic Genetics.

Date and Time: Tuesday, April 30—Wednesday, May 1, 1985; 8:30 a.m.-5:00 p.m.

Place: National Science Foundation, 1800 G Street, NW., Washington, D.C. 20550, Room 1242B.

Type of Meeting: Closed.

Contact Person: Dr. Philip D. Harriman, Program Director, Prokaryotic Genetics; (202) 357-9687.

Purpose of Advisory Panel: To provide advice and recommendations concerning support for research.

Agenda: To review and evaluate research proposals as part of the selection process for awards.

Reason for Closing: The proposals being reviewed include information of a proprietary or confidential nature, including technical information; financial data, such as salaries; and personal information concerning individuals associated with the proposals. These matters are within exemptions (4) and (6) of 5 U.S.C. 552b(c), Government in the Sunshine Act.

Authority to Close Meeting: This determination was made by the Committee Management Officer pursuant to provisions of section 10(d) of Pub. L. 92-463. The Committee Management Officer was delegated the authority to make such determinations by the Director, NSF, on July 6, 1979.

April 9, 1985.

Rebecca Winkler,

Committee Management Officer.

[FR Doc. 85-8876 Filed 4-11-85; 8:45 am]

BILLING CODE 7555-01-M

Interagency Arctic Research Policy Committee; Meeting

March 27, 1985.

In accordance with the Arctic Research and Policy Act, Pub. L. 98-373, the National Science Foundation announces the following meeting:

Name: Interagency Arctic Research Policy Committee.

Date and Time: April 29, 1985, 9:30 a.m.

Place: National Science Foundation, Room 543, 1800 G Street, NW., Washington, D.C.

Type of Meeting: Open—entire meeting.

Contact Person: Dr. Peter E. Wilkniss, Division Director, Division of Polar Programs, Room 620, National Science Foundation, Washington, D.C. 20550. Telephone: (202) 357-7766.

Purpose of Committee: The Interagency Arctic Research Policy Committee was established by Pub. L. 98-373, the Arctic Research and Policy Act, to survey arctic research, help determine priorities for future arctic research, assist in the development of a national arctic research policy, prepare a single, integrated multi-agency budget request for arctic research, develop a 5-year plan to implement national arctic research policy, and facilitate cooperation in and coordination of arctic research.

Agenda:

9:30 Welcome and Introduction
9:40 Introduction to the Arctic
10:00 Congressional Perspective on Arctic Research and Policy Act
10:10 Requirements and Work Plan
10:20 Presentation of Proposed Research Policy
10:30 Presentation of Agency Budget Plans
10:50 Message from Chairman, Arctic Research Commission
11:00 Public Participation Period

Public Participation: Members of the public are invited to submit written comments to the contact person listed above prior to the meeting. Written comments received in advance of the meeting will be distributed to Committee representatives for consideration and acknowledgement. Committee meetings are not designed as public hearings and will not normally receive verbal comments from observers unless specifically invited by the Committee. Observers invited to address the Committee will be limited to 5 minutes each. An invitation to address the Committee is contingent upon advance submission of the proposed statement and a determination by the Committee that such statement is relevant and appropriate to the agenda at that particular meeting. The texts of such statements shall not exceed 5 double-spaced typed pages each.

Peter E. Wilkniss,

Director, Division of Polar Programs.

[FR Doc. 85-9027 Filed 4-11-85; 8:45 am]

BILLING CODE 7555-01-M

NUCLEAR REGULATORY COMMISSION

Documents Containing Reporting or Recordkeeping Requirements; Office of Management and Budget Review

AGENCY: Nuclear Regulatory Commission.

ACTION: Notice of the Office of Management and Budget review of information collection.

SUMMARY: The Nuclear Regulatory Commission (NRC) has recently submitted to the Office of Management and Budget (OMB) for review the following proposal for the collection of information under the provisions of the Paperwork Reduction Act (44 U.S.C. Chapter 35).

1. Type of submission, new, revision or extension: Revision.

2. The title of the information collection: 10 CFR Part 35—Medical Use of Byproduct Material

3. The form number if applicable: Not applicable.

4. How often the collection is required: Required reports are collected and evaluated on a continuing basis as events occur. Applications for new licenses or amendments may be submitted at any time. Applications for renewal of licenses are submitted every five years.

5. Who will be required or asked to report: Physicians and medical institutions who are applicants for or holders of an NRC license authorizing the administration of byproduct material or its radiation to humans for medical care.

6. An estimate of the number of responses: 99,355

7. An estimate of the total number of hours needed to complete the requirement or request: 426,429

8. An indication of whether Section 3504 (h), Pub. L. 96-511 applies: Not applicable.

9. Abstract: NRC is proposing a complete revision of 10 CFR Part 35, the regulations governing the use of byproduct material in the diagnosis and treatment of human disease. The revision consolidates requirements that are scattered in the current regulations, license conditions, and policy statements. It also clarifies recordkeeping and reporting requirements.

Copies of the submittal may be inspected or obtained for a fee from the NRC Public Document Room, 1717 H Street, NW., Washington, DC 20555.

Comments and questions should be directed to the OMB reviewer, Jefferson B. Hill, (202) 395-7340.

The NRC Clearance Officer is R. Stephen Scott, (301) 492-8585.

Dated at Bethesda, Maryland, this 9th day of April 1985.

For the Nuclear Regulatory Commission.

Patricia G. Norry,

Director, Office of Administration.

[FR Doc. 85-8850 Filed 4-11-85; 8:45 am]

BILLING CODE 7590-01-M

[Docket Nos. 50-315/50-316, Licenses No. DPR-58/DPR-74, EA 84-105]

American Electric Power Service Corp. (D.C. Cook Plant, Units 1 and 2); Order Imposing Civil Monetary Penalty

I

American Electric Power Service Corporation (the "licensee") is the holder of Operating Licenses No. DPR-58 and No. DPR-74 (the "licenses") issued by the Nuclear Regulatory Commission (the "Commission"). The licenses authorize the licensee to operate the D.C. Cook Plant, Units 1 and 2 in accordance with the conditions specified therein. The licenses were issued on October 25, 1974 and December 23, 1977.

II

A special inspection of the licensee's activities was conducted during the period June 21 through August 30, 1984. The results of this inspection indicated that the licensee has not conducted its activities in full compliance with the conditions of its license. A written Notice of Violation and Proposed Imposition of Civil Penalty was served upon the licensee by letter dated November 21, 1984. The Notice states the nature of the violations, the applicable provisions of the Atomic Energy Act, the requirements of the Nuclear Regulatory Commission regulations or license conditions that were violated, and the amount of civil penalty proposed for the violations. The licensee responded to the Notice of Violation and Proposed Imposition of Civil Penalty with a letter dated December 21, 1984.

III

Upon consideration of American Electric Power Service Corporation's response (December 21, 1984) and the statements of fact, explanation, and argument regarding mitigation contained therein, as set forth in the Appendix to this Order, the Director of the Office of Inspection and Enforcement has determined that the penalty proposed for the violations designated in the Notice of Violation and Proposed Imposition of Civil Penalty should be imposed.

IV

In view of the foregoing and pursuant to Section 234 of the Atomic Energy Act of 1984, as amended, 42 U.S.C. 2282, Pub. L. 96-295, and 10 CFR 2.205, it is hereby ordered that:

The licensee pay a civil penalty in the amount of Fifty Thousand Dollars ($50,000) within thirty days of the date of this Order, by check, draft, or money order, payable to the Treasurer of the United States and mailed to the Director of the Office of Inspection and Enforcement, USNRC, Washington, D.C. 20555.

V

The licensee may, within thirty days of the date of this Order, request a hearing. A request for a hearing shall be addressed to the Director, Office of Inspection and Enforcement. A copy of the hearing request shall also be sent to the Executive Legal Director, USNRC, Washington, D.C. 20555. If a hearing is requested, the Commission will issue an Order designating the time and place of hearing. If the licensee fails to request a hearing within thirty days of the date of this Order, the provisions of this Order shall be effective without further proceedings and, if payment has not been made by that time, the matter may be referred to the Attorney General for collection.

In the event the licensee requests a hearing as provided above, the issues to be considered at such hearing shall be:

(a) Whether the licensee was in violation of the Commission's requirements as set forth in the Notice of Violation and Proposed Imposition of Civil Penalty referenced in Section II above, and

(b) Whether on the basis of such violations this Order should be sustained.

Dated at Bethesda, Maryland this 8th day of April 1985.

For the Nuclear Regulatory Commission.

James M. Taylor,

Director, Office of Inspection and Enforcement.

Appendix—Evaluation and Conclusion

The licensee's December 21, 1984 response to the November 21, 1984 Notice of Violation and proposed Imposition of Civil Penalty for the American Electric Power Service Corporation, D.C. Cook Plant, Units 1 and 2 admits that the violations occurred as stated in the Notice. The violations involved instances in which the licensee failed to meet operability requirements of the technical specifications owing to an insufficient understanding by plant staff of such requirements or inadequate surveillance procedures. The licensee requests 50% mitigation of the amount of the proposed civil penalty for unusually extensive corrective actions.

Summary of Licensee's Response

The licensee contends that the safety significance of the violations was limited; notwithstanding, the licensee took specific corrective actions for each of the three violations identified. In addition to these specific corrective actions, the licensee implemented a generic corrective action program to prevent recurrence of similar events and to gain assurance that similar situations involving noncompliance do not now exist. These generic corrective actions encompass the following areas: (1) The licensee is conducting a review of procedures dealing with either containment integrity or delivery of emergency water to either the primary or secondary system. The review process is expected to be completed by May 1, 1985; (2) A program for independent reviews of adherence to procedures has been developed to assure that procedures adequately demonstrate and allow literal compliance with technical specifications. This program started on September 17, 1984; (3) A training program is being developed for presentation to both licensed operators and certain nonoperating personnel which consists of eleven key areas that relate the accident analyses to the technical specifications. The first training session was presented on November 16, 1984; and (4) An effort is under way to identify technical specifications which require clarification. The licensee urges the NRC to consider these extensive corrective actions cited in their response letter as well as corrective actions taken to ensure proper operation of other systems not referenced in the November 21, 1984 Notice. In view of these actions, the licensee requests mitigation of the proposed civil penalty by 50 percent as provided under Section V.B.2 of Appendix C to 10 CFR Part 2.

Evaluation of Licensee's Response and Conclusion

The NRC staff has carefully reviewed the licensee's response and has concluded that the licensee did not provide any information that was not already considered in determining the significance of the violation. A review of the licensee's generic corrective actions indicated that the corrective actions taken and proposed are extensive in scope and are the type of actions that, if properly implemented, should have a lasting effect on overall regulatory performance. However, the licensee has had problems with ensuring that surveillance procedures adequately implement technical specification requirements and that operating procedures are correctly applied. These matters have been discussed in enforcement conferences as early as August 4, 1981. Continuing problems in this area indicate that actions to correct the previous violations and to prevent recurrence of similar problems in this case have not been adequate. Thus, more extensive corrective actions were required to ensure NRC requirements were satisfied now. Therefore, the NRC staff has concluded that mitigation of the civil penalty based on extensive corrective actions is not warranted in this case.

[FR Doc. 85-8857 Filed 4-11-85; 8:45 am]

BILLING CODE 7590-01-M

[License No. 21-19339-01; Docket No. 30-17456; EA 85-02]

Gorsira X-Ray, Inc.; Order Revoking License

I

Gorsira X-Ray, Inc., P.O. Box 3031, Farmington Hills, MI (the "licensee") is the holder of Byproduct Material License No. 21-19339-01 (the "license") issued by the Nuclear Regulatory Commission (NRC). License No. 21-19339-01 authorizes the possession and use of byproduct materials for industrial radiography and is due to expire April 30, 1985.

II

By Order dated January 15, 1985, the license was suspended, effective immediately, and the licensee was given an opportunity to show cause why the license should not be revoked. 50

Federal Register 3850 (January 28, 1985). As described in that Order, the NRC took these actions on the basis of the licensee's failure to respond to a July 2, 1984 Notice of Violation that set forth the violations identified during the April 27, 1984 inspection. The NRC Region III staff attempted to contact the licensee by telephone on six occasions during the period August 14 through September 24, 1984. These attempts were not successful. The NRC sent the licensee another letter on October 22, 1984 requesting a response to the July 2, 1984 Notice. The licensee did not respond. On November 26, 1984, the Region III staff contacted the licensee's attorney. The attorney stated the licensee had received the July 2, 1984 Notice and the October 22, 1984 letter from the NRC. The attorney made arrangements for a meeting on December 12, 1984 between the licensee and the NRC staff to discuss the July 2, 1984 Notice and the licensee's failure to respond to that Notice. The licensee failed to attend that meeting.

Because these developments raised substantial questions as to whether the licensee had sufficient financial resources as well as the ability and willingness to comply with NRC requirements to ensure that licensed byproduct material would be used in a manner that would provide adequate protection of public health and safety, the Order to Show Cause and Order Suspending License was issued on January 15, 1985 to the licensee. In accordance with the Order the licensee was required to cease and desist from any use of byproduct material in its possession and immediately place all such material in locked storage. The licensee was required within seven days of the issuance of the Order to transfer all licensed material within its possession to a person authorized by the NRC to possess and use such material and to notify the NRC Region III office in writing to whom the material was transferred and when the transfer was completed.

The Order also provided the licensee opportunity to file a written answer thereto within 25 days of the date of the Order and stated that, upon the licensee's failure to file an answer within the specified time, the Director, Office of Inspection and Enforcement, would issue a subsequent Order, without further notice, revoking the license. The licensee has not filed an answer to the Order. The NRC understands, however, that the radioactive material that was in the licensee's possession has been transferred to an authorized recipient. Because the circumstances described in the January 15, 1985 Order would warrant revocation of a license and the licensee has not demonstrated, though given an opportunity to do so, why its license should not be revoked, I have determined to revoke Byproduct Material License No. 21-19339-01.

III

Accordingly, pursuant to Sections 81, 161(b), and 186 of the Atomic Energy Act of 1954, as amended, and the Commission's regulations in 10 CFR Parts 2, 30, and 34, it is hereby ordered that Byproduct Material License No. 21-19339-01 is revoked.

This Order is effective upon issuance.

Dated at Bethesda, Maryland this 2nd day of April 1985.

For the Nuclear Regulatory Commission.

James M. Taylor,

Director, Office of Inspection and Enforcement.

[FR Doc. 85-8856 Filed 4-11-85; 8:45 am]

BILLING CODE 7590-01-M

[License No. 34-13774-01, EA 85-40]

John C. Haynes d.b.a. John C. Haynes Company; Order

I

John C. Haynes Company ("the licensee"), 800 Hebron Road, Newark, Ohio 43055, is the holder of Byproduct Material License No. 34-13774-01 which currently authorizes the licensee to possess americium-241 for storage only. During the 1970's the licensee's facility was used to irradiate diamonds and other gemstones using unsealed americium-241 for the purpose of inducing color changes. At one time the licensee possessed up to 25 curies of americium-241 and 2 curies of cerium-144. Subsequently, the licensee advised NRC that all radioactive material was properly disposed of at an authorized disposal facility with the exception of a small residual amount in the form of contamination of the licensee's facility. In 1981 the license was modified to limit activities to *storage* only of about 150 millicuries of americium-241 in the form of residual contamination.

II

On March 26, 1985, John C. Haynes was arrested by agents of the Federal Bureau of Investigation for unauthorized possession and use of radioactive byproduct material and for making false statement to the Nuclear Regulatory Commission (NRC). A substantial amount of americium-241, approximately 1-2 curies was recovered from the licensee's facility. A larger quantity, estimated by Mr. Haynes to be about 20 curies, was removed from the residence of an associate of the licensee. The amount recovered far exceeds the 150 millicurie limit authorized by the license in the form of contamination in the licensee's facility. Survey measurements taken by NRC and the Department of Energy personnel at the time of the arrest indicates that the licensee's facility is contaminated with significant quantities of americium-241. Approximately 1 curie of americium-241 remains in four gloveboxes. Mr. Haynes stated that he had used flammable chemical agents to decontaminate gemstones and these chemicals are located in the gloveboxes. Further, highly radioactive waste material was found in the gloveboxes which the licensee stated is soaked with flammable cleaning fluid.

The recent discovery of Mr. Haynes' continued unauthorized use of licensed material, and the extensive contamination of the building in which material has been used, caps the already checkered history of Mr. Haynes as an NRC licensee. A number of events in recent years have raised questions regarding the licensee's capability to safely control licensed radioactive material. The licensee has been cited for a number of violations of NRC requirements. During a December 16, 1975 inspection of the licensee's facility, several items of noncompliance were identified relating to personnel overexposure, inadequate radiological surveys, inadequate personnel monitoring, inadequate storage of radioactive materials, and inadequate record keeping. Further, as a result of inspections on February 6-7, 1980, March 14, 1980, and November 17-19, 1981, items of noncompliance were identified relating to contamination in excess of a license condition, inadequate radiological surveys, and unauthorized storage and incineration of licensed material.

In 1980, the NRC was informed that the licensee was in default on the mortgage on its licensed facility and that the mortgagee was threatening foreclosure. The NRC's concern that the licensee might lose control over its licensed facility led to the issuance in 1981 of an Order to Modify License, which limited licensed activity only to storage of material and which required the licensee to submit a decontamination plan. 46 FR 44540 (Sept. 4, 1981). In 1982, upon presentation to the NRC of documentation that the licensee had paid off its mortgage and gained clear title to the property, and upon payment

of inspection fees owed the NRC, the Order to Modify License was rescinded. 47 FR 26952 (June 22, 1982). This was only done, however, after the license had been amended to limit licensed activity to storage only.

As a result of inspections conducted on July 21–22, August 4, 18, and 19, 1983 at the licensee's facility located at Rural Route 6, Newark, Ohio, Region III inspectors and an NRC consultant, Oak Ridge Associated Universities (ORAU), determined that extensive contamination existed, both in restricted and unrestricted areas of the facility. The majority of the contamination was located within the restricted laboratory area within the structure. Contamination was also extensive on the restricted area walls and floors. Other restricted area surfaces which are contaminated are sinks, shower drains, and exterior surfaces of the gloveboxes. Surface paint scraping also yielded extensive contamination.

On August 19, 1983, the licensee submitted to the Nuclear Regulatory Commission (NRC) a request for termination of the license in which the licensee indicated that he was financially unable to pay for decommissioning of its facility.

Under 10 CFR 30.36(d)(1)(v), a licensee must decontaminate its facility and provide a report to NRC confirming the absence of radioactive contamination. Accordingly, the NRC issued an Order to the licensee to show cause why the licensee should not be required to adopt the ORAU Decontamination Plan contained in the ORAU Final Report (May 1984), or an equivalent plan, and to decontaminate the facility in accordance with such plan. 49 FR 26325 (June 27, 1984). On about July 10, 1984, the licensee responded to the Order by asserting that he did not have the financial ability to pay for decontamination.

III

As noted in section II of this Order, the licensee's facility is now substantially more contaminated then it was at the time of the August 1983 ORAU survey as the result of the licensee's unauthorized use of americium-241 at the facility. Approximately 1-curie of americium-241 is now present in the four gloveboxes at the facility as contrasted to an estimated 150 millicuries in the entire facility in August 1983. The ventilation system, which maintains a negative presure on the gloveboxes (thereby helping avoid the dispersal of the contamination offsite) may be shut off due to the licensee's past failures to make timely electric utility payments. Although no contamination has to date been detected off the licensee's property, a substantial amount of americium-241 is present in the facility in powder form which could be dispersed as a result of vandalism, fire or other phenomena.

As a condition of his release on his own recognizance, the U.S. magistrate prohibited Mr. Haynes from going to the facility. Even if he were permitted access to the facility, Mr. Haynes' unauthorized use of material indicates that he neither appreciates the hazard posed by the material nor can be trusted to safely maintain the facility. There is no other responsible licensed individual in a position to ensure the security and the safety of the facility. However, 24-hour security is being maintained by the Licking County Sheriff's Office through an agreement with NRC as a short-term measure.

In view of the extensive contamination of the licensee's facility and in the absence of a responsible individual who can act for the licensee to ensure that the facility is safely maintained, the Commission lacks adequate assurance that the licensee's facility can remain in its present state without undue risk to public health and safety. The radioactive contamination of the facility and the physical condition of the facility and its contents pose an imminent hazard that requires immediate action to abate the hazard. Accordingly, I have determined pursuant to 10 CFR 2.202(f) that the public health, safety, and interest require that the licensee be ordered, effective immediately, to permit entry into his facility and removal of radioactive material and contamination by a person or agency authorized by the Commission.

I have also determined that License No. 34–13774–01 should be revoked. Mr. Haynes' unauthorized use of radioactive material, in such a manner as to greatly increase the contamination of his facility and the hazard it poses to the public, evinces a wanton disregard for the Commission's requirements and public health and safety. The licensee's precarious financial position also draws into question the wisdom of permitting him to remain a licensee, even in a possession-only status, and the licensee has previously requested termination of the license. All these circumstances constitute sufficient cause for revocation of the license under section 186 of the Atomic Energy Act. In view of the licensee's willful disregard of the Commission's requirements, and the lack of adequate control over licensed activities, I have determined that no prior notice is required under 10 CFR 2.201 and that, pursuant to 10 CFR 2.202(f), removal of all radioactive material from the facility and completion of decontamination is immediately required and, thereafter, License No. 34–13774–01 should be revoked.

IV

Accordingly, pursuant to Section 81, 161b, 161i, 161o, and 186 of the Atomic Energy Act of 1954, as amended, and the Commission's regulations in 10 CFR 2.202 and Part 30, it is hereby ordered that:

A. Effective immediately, the licensee shall permit a person or agency authorized by the Commission to enter, survey, and remove from the facility radioactive material and contamination and contaminated objects which pose an imminent hazard to the public health and safety. J.C. Haynes is responsible for the costs associated with the removal of material and any decontamination necessitated by the imminent hazard.

B. Effective immediately, upon completion of the action specified in section A above, the licensee shall: (1) Remove or cause to be removed any remaining radioactive material from the facility and (2) decontaminate or cause to be decontaminated the facility and its environs to the levels specified in "Guidelines for Decontamination of Facilities and Equipment Prior to Release for Unrestricted Use or Termination of Licenses for Byproduct, Source of Special Nuclear Material." Following the removal of all radioactive material from the facility and completion of decontamination activities as specified herein, Byproduct Material License No. 34–13774–01 will be revoked.

V

The licensee may show cause why this Order should not have been issued and should be vacated by filing a written answer under oath or affirmation within 20 days of the date of this Order which sets forth the matters of fact and law on which the licensee relies. The licensee may answer as provided in 10 CFR 2.202(b) by consenting to this Order. Upon the failure of the licensee to answer within the specified time, this Order shall be final without further proceedings.

The licensee or any other person who has an interest affected by this Order may request a hearing within 20 days after issuance of this Order. Any answer to this Order or request for hearing shall be submitted to the Director, Office of Inspection and Enforcement, U.S.

Nuclear Regulatory Commission, Washington, D.C. 20555. Copies shall also be sent to the Executive Legal Director at the same address. If a person other than the licensee requests a hearing, that person shall describe specifically, in accordance with 10 CFR 2.714(a)(2), the nature of the person's interest and the manner in which that interest is affected by this Order. An answer to this order or a request for hearing shall not stay the immediate effectiveness of section IV of this order.

If a hearing is requested, the Commission will issue an Order designating the time and place of any hearing. If a hearing is held, the issue to be considered at such hearing shall be whether, on the basis of the matters set forth in sections II & III of this Order, this Order should be sustained.

Dated at Bethesda, Maryland, this 5th day of April 1985.

For the Nuclear Regulatory Commission.

James M. Taylor,

Director, Office of Inspection and Enforcement.

[FR Doc. 85-8851 Filed 4-11-85; 8:45 am]

BILLING CODE 7590-01-M

[Docket No. 50-123]

Finding of No Significant Environmental Impact; Facility Operating License No. R-79, University of Missouri, Rolla

The Nuclear Regulatory Commission (the Commission) is considering issuance of an amendment to Facility Operating License No. R-79 for the University of Missouri research reactor located on the campus in Rolla, Missouri.

The amendment will renew the Operating License until November 20, 1999, in accordance with the licensee's application dated December 14, 1984. Opportunity for hearing was afforded by the Notice of Consideration of Extension of License Expiration Date published in the **Federal Register** on February 13, 1985 at 50 FR 6085.

Continued operation of the reactor will not require alteration of buildings or structures, will not lead to changes in effluents released from the facility to the environment, will not increase the probability or consequences of accidents, and will not involve any unresolved issues concerning alternative uses of available resources. Based on the foregoing and on the Environmental Assessment dated November 16, 1984, the Commission concludes that renewal of the license will not result in any significant environmental impacts.

Finding of No Significant Impact

The Commission has determined not to prepare an Environmental Impact Statement for the proposed action. The Commission has prepared an Environmental Assessment of this action and has concluded that the proposed action will not have a significant effect on the quality of the human environment.

Summary of Environmental Impacts as Described in the Environmental Assessment

The proposed action would authorize the licensee to continue operating the reactor in the same manner that it has been operated since 1961. The environmental impacts associated with the continued operation of the University of Missouri, Rolla, facility are discussed in an Environmental Assessment dated November 16, 1984. The Assessment, which was issued in connection with Amendment No. 7, concluded that continued operation of the University of Missouri, Rolla, reactor will not result in any significant environmental impacts on air, water, land or biota in the area, and that an Environmental Impact Statement need not be prepared. These conclusions were based on the following:

(a) The excess reactivity available under the technical specifications is insufficient to support a reactor transient generating enough energy to cause overheating of the fuel or loss of integrity of the cladding.

(b) Even after prolonged operation at a power level of 200 kilowatts, the inventory of fission products in the fuel cannot generate sufficient radioactive decay heat to cause fuel damage even in the hypothetical event of instantaneous total loss of coolant, and

(c) The hypothetical loss of integrity of a fueled experiment will not lead to radiation exposures in the unrestricted environment that exceed the guideline values of 10 CFR Part 20.

The Assessment, dated November 16, 1984, and these conclusions are fully applicable to this extension of expiration date.

For further details with respect to this proposed action, see the application for extension dated December 14, 1984, the Environmental Assessment, and the Safety Evaluation Report prepared by the staff (NUREG-1086).

These documents and this Notice of Finding of No Significant Environmental Impact are available for public inspection at the Commission's Public Document Room, 1717 H Street NW, Washington, D.C. 20555. Copies may be obtained upon request addressed to the U.S. Nuclear Regulatory Commission, Washington, D.C. 20555, Attention: Director, Division of Licensing.

Copies of NUREG-1086 may be purchased by calling (301) 492-9530 or by writing to the Publication Services Section, Document Management Branch, Division of Technical Information and Document Control, U.S. Nuclear Regulatory Commission, Washington, D.C. 20555; or purchased from the National Technical Information Service, Department of Commerce, 5285 Port Royal Road, Springfield, Virginia 22161.

Dated at Bethesda, Maryland, this 5th day of April 1985.

For the Nuclear Regulatory Commission.

Dennis M. Crutchfield,

Assistant Director for Safety Assessment, Division of Licensing.

[FR Doc. 85-8854 Filed 4-11-85; 8:45 am]

BILLING CODE 7590-01-M

[Docket No. 30-08168; License No. 37-14855-01, EA 84-110]

Trans-Eastern Inspection Services, Inc.; Order Imposing Civil Monetary Penalties

I

Trans-Eastern Inspection Services, Inc., 1726 Northwest Avenida del sol, Boca Raton, Florida (the "licensee") is the holder of License No. 37-14855-01 (the "license") issued by the Nuclear Regulatory Commission (the "Commission" or "NRC") which authorizes the licensee to use byproduct material to conduct industrial radiography and related activities.

II

An NRC safety inspection of the licensee's activities under the license was conducted in August 1984. During the inspection, the NRC staff determined that the licensee had not conducted its activities in full compliance with NRC requirements. A written Notice of Violation and Proposed Imposition of Civil Penalties was served upon the licensee by letter dated December 3, 1984. The Notice states the nature of the violations, the provisions of the Nuclear Regulatory Commission's requirements that the licensee had violated, and the amount of the proposed civil penalties for the violations. A response dated January 16, 1985 to the Notice of Violation and Proposed Imposition of Civil Penalties was received from the licensee.

III

Upon consideration of the answers received, and the statements of fact, explanation, and argument for remission or mitigation of the proposed civil

penalties contained therein, the Director, Office of Inspection and Enforcement, has determined, as set forth in the Appendix to this Order, that the penalties proposed in the Notice of Violation and Proposed Imposition of Civil Penalties for the violations as amended by the enclosed Appendix should be imposed.

IV

In view of the foregoing and pursuant to Section 234 of the Atomic Energy Act of 1954, as amended, 42 U.S.C. 2282, PL 96-295, and 10 CFR 2.205, it is hereby ordered that:

The licensee pay civil penalties in the amount of Five Thousand Dollars ($5,000) within thirty days of the date of this Order, by check, draft, or money order, payable to the Treasurer of the United States and mailed to the Director, Office of Inspection and Enforcement, USNRC, Washington, D.C. 20555.

V

The licensee may, within thirty days of the date of this Order, request a hearing. A request for a hearing shall be addressed to the Director, Office of Inspection and Enforcement. A copy of the hearing request shall also be sent to the Executive Legal Director, USNRC, Washington, D.C. 20555. If a hearing is requested, the Commission will issue an Order designating the time and place of hearing. Upon failure of the licensee to request a hearing within thirty days of the date of this Order, the provisions of this Order shall be effective without further proceedings and, if payment has not been made by that time, the matter may be referred to the Attorney General for collection. In the event the licensee requests a hearing as provided above, the issues to be considered at such hearing shall be:

(a) Whether the licensee violated NRC requirements as set forth in the Notice of Violation and Proposed Imposition of Civil Penalties, as amended by the enclosed Appendix, and

(b) Whether, on the basis of such violations, this Order should be sustained.

Dated at Bethesda, Maryland this 2nd day of April 1985.

For the Nuclear Regulatory Commission.

James M. Taylor,

Director, Office of Inspection and Enforcement.

Appendix—Evaluations and Conclusions

In the licensee's January 16, 1985 response to the Notice of Violation and Proposed Imposition of Civil Penalties dated December 3, 1984, the licensee admits the seven violations except for a portion of one violation, and protests proposed imposition of the civil penalties. The response provides the reasons why the licensee believes the penalties are not appropriate. Provided below are (1) a restatement of each violation, (2) a summary of the licensee's response, and (3) the NRC evaluation of the licensee's response.

Restatement of Violations

A. 10 CFR 20.101(a) limits the whole body exposure of an individual in a restricted area to one and one quarter rems per calendar quarter, except as provided by 10 CFR 20.101(b). Paragraph (b) allows a whole body exposure of three rems per calendar quarter provided conditions specified are met.

Contrary to the above, during the second quarter of 1984, one individual working in the restricted area at a field site in Mazie, Oklahoma received a whole body radiation dose of 4.37 rems, an exposure of 1.37 rems in excess of that permitted under 10 CFR 20.101(b). [Further, during the second quarter of 1984, a second individual working in a restricted area at the same field site received a whole body radiation dose of 1.28 rems, an exposure of 30 millirems in excess of that permitted under 10 CFR 20.101(a), and the conditions of 10 CFR 20.101(b) were not met for this individual.] [1]

B. 10 CFR 20.201(b) requires that each licensee make such surveys as (1) are necessary to comply with regulations in 10 CFR Part 20 and (2) are reasonable under the circumstances to evaluate the extent of radiation hazards that may be present. As defined in 10 CFR 20.201(a), "survey" means an evaluation of the radiation hazards incident to the production, use, release, disposal, or presence of radioactive materials or other sources of radiation under a specific set of conditions.

Contrary to the above, on June 28, 1984, a 68 curie iridium-192 radiography source located in a radiography device was retrieved from a guide tube at a radiography site in Mazie, Oklahoma, without first performing a survey to determine the position of the source in the guide tube, and to evaluate the exposure that could be received during the retrieval of the source.

C. 10 CFR 34.43(b) requires that a radiation survey with a radiation survey instrument be made after each radiographic exposure to determine that the sealed source has been returned to its shielded position. The entire circumference of the radiographic exposure device must be surveyed and, if the device has a source guide tube, the survey must include the entire length of the guide tube.

Contrary to the above, on June 28, 1984, radiation surveys were not performed following each radiographic exposure to determine that the sealed source has returned to its shielded position. As a result, two radiographers approached the device unaware that the source was in an exposed condition and received unnecessary and unplanned exposures.

D. 10 CFR 34.33(d) requires that if an individual's pocket dosimeter is discharged beyond its range, the individual's film badge or TLD shall be immediately sent for processing.

Contrary to the above, on June 28, 1984, two radiographer's pocket dosimeters were discharged beyond their range and the film badges were not immediately sent for processing.

E. Condition 16 of License No. 37-14855-01 requires that licensed material be possessed and used in accordance with statements, representations, and procedures contained in an application dated February 23, 1982, as amended April 13, 1982, and letters dated February 1, 1983 and October 5, 1983.

The February 1, 1983 letter includes amendments to the operating and emergency procedures. Section 8.0, items F, G and H, requires that the radiographer notify the RSO of an emergency and maintain surveillance until the RSO, or persons authorized by the RSO, can take corrective action. This section further requires that at no time shall the radiographer try to retrieve the source.

Contrary to the above, on June 28, 1984, the RSO was not notified when it was determined that a source could not be returned to the shielded position. Further, the radiographers retrieved the source to the fully shielded position prior to notifying the RSO.

F. 10 CFR 20.105(b) requires that radiation levels in unrestricted areas, as defined in 10 CFR 20.3(a)(17), be limited so that an individual who is continuously present in the area cannot receive a dose in excess of 2 millirems in any hour or 100 millirems in any seven consecutive days.

Contrary to the above, on August 15, 1984, radiation levels of 1.0 millirem per hour (sufficient to provide a dose of greater than 100 millirems in seven consecutive days) existed 18 inches from the outside wall of a trailer, an unrestricted area, at the field site in Mazie, Oklahoma. The dose rate was

[1] As explained on page 3 under "NRC Evaluation of licensee Response," the bracketed material has been deleted form the Notice of Violation.

caused by a radiography device located in the trailer.

G. 10 CFR 20.203(e)(1) requires that rooms in which licensed materials are used or stored, in an amount exceeding ten times the quantity of material specified in 10 CFR Part 20, Appendix C, be conspicuously posted "Caution Radioactive Material" (CRM).

Contrary to the above, on August 15, 1984, the trailer at a field site in Mazie, Oklahoma, in which a 68 curie iridium-192 source was stored, was not conspicuously posted to indicate the presence of radioactive material. A small "Caution Radioactive Material" (CRM) tag was located in a south window, but was barely visible due to fading, and there was not CRM sign on the access door to the trailer.

These violations have been categorized in the aggregate at Severity Level III (Supplement IV).

Cumulative Civil Penalties—$5,000 assessed equally among the violations.

Summary of Licensee Response

The licensee admits the occurrence of all the violations cited in the Notice of Violation and Proposed Imposition of Civil Penalties, but provides evidence which indicates that one of two individuals referenced in Item A did not receive a dose in excess of 10 CFR 20.101(a) limits. Specifically, the licensee indicates that the individual who received 1.28 rems during the second quarter of 1984 had completed a Form NRC-4, which would have permitted the individual to receive a dose of 3 rems in a calendar quarter. The licensee states that this form had inadvertently been misfiled at the time of the inspection, and was not available for NRC review.

Although the licensee admits the violations, the licensee protests the civil penalties for the following stated reasons:

(a) Although a management breakdown contributed to the incident, this particular problem was isolated in nature, and the largest contributing factor to the violations was the willful and independent actions carried out by an experienced radiographer;

(b) A complete and truthful investigation of the incident was performed, the serious nature of the violations was not omitted, and all findings were completely reported to the NRC;

(c) The company has safely produced over a million radiographs over the past five years; and

(d) The company has taken corrective action.

NRC Evaluation of Licensee Response

Based on the additional information provided by the licensee, the NRC retracts that portion of the violation involving the individual who received a dose of 1.28 rem during the second calender year of 1984. Because another individual received an exposure in excess of that permitted by the regulation, a violation of 10 CFR 20.101(a) did occur.

The licensee has not provided a sufficient basis for withdrawal or mitigation of the civil penalties. While the licensee indicates that the actions of a single individual were the greatest contributor to the violations, the licensee acknowledges, in its specific response to each violation, that management deficiencies existed which also contributed to the problem. Such deficiencies included insufficient audits, a lack of physical presence at the Mazie site, and a failure to ensure that standard employment practices were carried out. Furthermore, it is management's responsibility to control and direct the activities of each employee and agent, and as stated in the NRC enforcement policy, the lack of management involvement may not be used as a basis for mitigating civil penalties.

The NRC staff acknowledges that the licensee provided the required report to the NRC on July 27, 1984. However, this does not provide a basis for mitigation of the civil penalties. Failure to make the report would have constituted an additional violation of NRC requirements. Furthermore, the licensee did not promptly identify the violation. If the licensee's site supervisor had promptly returned the April and May film badges, if licensee personnel had accurately recorded their dosimeter readings, and if the site supervisor had investigated complaints of a "radiation problem," the exposure in excess of regulatory limits could have been identified and possibly avoided.

The licensee has taken corrective action for the violations. However, corrective action is always required to correct violations. In this instance, the licensee's corrective actions were not considered unusually prompt or extensive. The actions taken were only those that the NRC would expect the licensee to take. Therefore, mitigation on this basis is not appropriate.

The licensee's enforcement history does not provide an adequate basis for mitigation of the civil penalties. An NRC inspection in October 1982 resulted in the identification of four violations. One of these violations, involving failure to perform an adequate survey, was also identified during the August 1984 inspection.

NRC Conclusion:

Although the licensee provided additional information not previously provided, which resulted in retraction of a portion of one of the violations, no information was provided to retract any violation in its entirety. Accordingly, the violations of each of the requirements set forth in the Notice of Violation did occur and they collectively represented a breakdown in management control of the radiation safety program. A sufficient basis was not provided for either mitigation or withdrawal of the civil penalties. Therefore, the NRC staff concludes that civil penalties of $5,000 should be imposed.

[FR Doc. 85-8858 Filed 4-11-85; 8:45 am]
BILLING CODE 7590-01-M

[Docket No. 50-124]

Environmental Assessment and Finding of No Significant Environmental Impact; Proposed Amendment to Facility Operating License No. R-62, Virginia Polytechnic Institute and State University

The Nuclear Regulatory Commission (the Commission) is considering issuance of a renewal amendment to Facility Operating License No. R-62 for the Virginia Polytechnic Institute and State University (VPI) research reactor located on the campus in Blacksburg, Virginia.

The amendment will renew the Operating License until November 16, 1989, and place the license in a "possession only" status in accordance with the licensee's applications dated October 2, 1979 and October 22, 1984, as supplemented.

Environmental Assessment

Identification of Proposed Action

By letter dated October 2, 1979, the licensee requested a license renewal with a power increase from 100 kilowatts (thermal) to 500 kilowatts (thermal). Opportunity for hearing was afforded by the Notice of Proposed Renewal of Facility License published in the Federal Register on May 2, 1980, at 45 FR 29453. No request for hearing or petition for leave to intervene was filed following notice of the proposed action. The licensee requested, by letter dated August 19, 1981, that the original application be amended to restore the power to 100 kilowatts (thermal). Then on October 22, 1984, the licensee applied for a possession only license which

renews the license until November 16, 1989. Currently, there are no plans to change any of the structures or other facilities associated with the reactor during the possession only license period requested by the licensee.

Need for the Proposed Action

The operating license for the facility was to have expired November 16, 1979. The licensee made a timely request for renewal. The proposed action is required to authorize VPI to continue to possess the nuclear research reactor even though a decision has been made not to operate it in the near future.

Alternatives to the Proposed Action

As required by Section 102(2)(E) of NEPA (42 U.S.C.A. 4332(2)(E)), the staff has considered possible alternatives to the proposed action. The only reasonable alternative to the proposed action that was considered was not renewing the license. This alternative would have led to change in status and a likely small impact on the environment. From the standpoint of environmental impact, there are no appropriate alternatives to the proposed action.

Alternative Use of Resources

This action does not involve the use of any resources beyond those normally allocated for such activities.

Agencies and Persons Consulted

The staff did not consult other agencies or persons.

No Significant Impact Finding

Based on the foregoing Environmental Assessment, we conclude that the proposed action will not have a significant effect on the quality of the human environment.

Accordingly, the Commission has determined not to prepare an Environmental Impact Statement for this proposed action.

For further details with respect to this action, see the licensee's request for renewal dated October 2, 1979, and supplemental letters. These documents are available for public inspection at the Commission's Public Document Room, 1717 H Street, NW., Washington, D.C.

Dated at Bethesda, Maryland this 4th day of April 1985.

For the Nuclear Regulatory Commission.

Dennis M. Crutchfield,

Assistant Director for Safety Assessment, Division of Licensing.

[FR Doc. 85-8853 Filed 4-11-85; 8:45 am]

BILLING CODE 7590-01-M

Docket Nos. 50-266 and 50-301

Wisconsin Electric Power Co.; Denial of Request for Amendment to Facility Operating Licenses and Opportunity for a Hearing

The U.S. Nuclear Regulatory Commission (the Commission) has denied in part a request by the licensee for amendments to Facility Operating License Nos. DPR-24 and DPR-27, issued to the Wisconsin Electric Power Company (the licensee), for operation of the Point Beach Nuclear Plant, Unit Nos. 1 and 2 (the facilities), located in the Town of Two Creeks, Manitowoc County, Wisconsin.

The amendments as proposed by the licensee modified the Point Beach Technical Specifications (TS), to provide additional restrictions on the movement of heavy loads over the spent fuel pool, changed position titles within the administrative section of the TS, and made miscellaneous corrections and editorial changes. The licensee's application for the amendments was dated March 16, 1984 as modified September 25, 1984. Notice of consideration of issuance of the amendments was published in the **Federal Register** on June 20, 1984 (49 FR 25350 at 25381) and on January 23, 1985 (50 FR 3047 at 3057). The requested changes were granted except for a proposed change regarding selected facility staff qualifications, which was denied.

Notice of issuance of Amendment Nos. 91 and 95 will be published in the Commission's next regular monthly **Federal Register** notice.

The portion of the application which proposed a change regarding selected facility staff qualifications was denied. The request to allow the use of either a "designated alternate" or the Health Physicist to meet the requirements formerly required of either the Superintendent-Chemistry and Health Physics or the Health Physicist was found unacceptable for the following reasons: (1) The designated alternate" is not limited to the Radiation Protection Staff (i.e., the individual could be part of the operations staff); (2) There is no assurance that the individual would have access to the plant manager; and (3) There is no assurance that the appointed individual would have line authority over Health Physics foreman and technicians. The existing TS were found to give licensee sufficient flexibility to operate the Point Beach facilities.

The licensee was notified of the Commission's denial of this request by letter dated April 8, 1985.

By May 13, 1985 the licensee may demand a hearing with respect to the denial described above and any person whose interest may be affected by this proceeding may file a written petition of leave to intervene.

A request for a hearing or petition for leave to intervene must be filed with the Secretary of the Commission, U.S. Nuclear Regulatory Commission, Washington, D.C. 20555, Attention: Docketing and Service Branch, or may be delivered to the Commission's Public Document Room, 1717 H Street, NW., Washington, D.C., by the above date.

A copy of the petition should also be sent to the Executive Legal Director, U.S. Nuclear Regulatory Commission, Washington D.C. 20555, and to Gerald Charnoff, Esq., Shaw, Pittman, Potts, & Trowbridge, 1800 M Street, NW., Washington, D.C. 20036, attorney for the licensee.

For further details with respect to this action, see (1) the application for amendment dated March 16, as modified September 25, 1984 and (2) the Commission's letter to Wisconsin Electric Power Company, which are available for public inspection at the Commission's Public Document Room, 1717 H Street, NW., Washington, D.C., and at the Joseph P. Mann Public Library, Two Rivers, Wisconsin. A copy of item (2) may be obtained upon request addressed to the U.S. Nuclear Regulatory Commission, Washington, D.C. 20555, Attention: Division of Licensing.

Dated at Bethesda, Maryland this 8th day of April, 1985.

For the Nuclear Regulatory Commission.

James R. Miller,

Chief, Operating Reactors Branch #3, Division of Licensing.

[FR Doc. 85-8855 Filed 4-11-85 8:45 am]

BILLING CODE 7590-01-M

Design Information Needs in the Site Characterization Plan; Availability of Draft Technical Position

AGENCY: Nuclear Regulatory Commission.

ACTION: Notice of availability.

SUMMARY: The Nuclear Regulatory Commission (NRC) has completed the Draft Generic Technical Position, "Design Information Needs in the Site Characterization Plan."

DATE: The comment period expires June 11, 1985.

ADDRESSES: Send comments to Hubert J. Miller, Chief, Repository Projects Branch, Division of Waste Management,

U.S. Nuclear Regulatory Commission, Mail Stop 623-SS, Washington D.C. 20555. Copies of this document may be obtained free of charge upon written request to Nancy Still, Division of Waste Management, U.S. Nuclear Regulatory Commission, Mail Stop 623-SS, Washington, D.C. 20555, Telephone 1/800/368-5642, Ext. 74426, or 427-4426 for Washington area callers.

FOR FURTHER INFORMATION CONTACT: John T. Greeves, Acting Chief, Engineering Branch, Division of Waste Management, U.S. Nuclear Regulatory Commission, Washington, DC 20555, Telephone No. (301) 427-4734.

SUPPLEMENTARY INFORMATION: The Nuclear Waste Policy Act of 1982 (Pub. L. 97-425) and Commission Regulation 10 CFR Part 60 promote interaction between Department of Energy (DOE) and NRC prior to submittal of a license application for a geologic repository. These interactions are to fully inform DOE about the level of information that must be provided in a license application so as to allow a licensing decision to be made by the NRC.

The principal mechanism for providing guidance to the DOE is completion by the NRC staff of Site Characterization Analyses (SCA's) which document staff reviews of DOE Site Characterization Plans (SCP's) submitted according to the Nuclear Waste Policy Act and 10 CFR Part 60. Additional means have been developed to supplement the guidance provided in the SCA's. These include staff technical positions on both generic and site specific issues. Generic Technical Positions (GTP's) establish the staff's position on broad technical issues that would be applicable to any site. Site Technical Positions (STP's) establish the staff's position on a site specific technical issue. A number of GTP's will be developed by the staff to establish lists of generic issues or information requirements for sites being investigated by DOE.

At an appropriate stage in the development of each GTP, notice of availability will be published in the **Federal Register** and copies will be placed in the Public Document Rooms (PDR's) and distributed to DOE, host states and potentially affected tribes for comment. Interested members of the general public will be able to obtain copies upon request and will be encouraged to comment. At the close of the comment period (normally 60 days), the staff will consider the comments received and issue a final position.

This announcement solicits comment on a draft GTP, "Design Information Needs in the Site Characterization Plan". In this GTP, the NRC staff addresses the type and level of detail of design information that needs to be included in the Site Characterization Plan (SCP). This is intended to ensure that the SCP will include sufficient information for the NRC to assess the completeness and adequacy of the site characterization program for the proposed geologic repository. While the NRC recognizes the design information needs will vary from site to site, certain design information is generic and the GTP contains guidance which NRC has developed for all candidate sites in various media.

Dated at Silver Spring, Maryland, this 2nd day of April, 1985.

For the Nuclear Regulatory Commission.

Hubert J. Miller,

Chief, Repository Projects Branch, Division of Waste Management, Office of Nuclear Material Safety and Safeguards.

[FR Doc. 85-8852 Filed 4-11-85; 8:45 am]

BILLING CODE 7590-01-M

PACIFIC NORTHWEST ELECTRIC POWER AND CONSERVATION PLANNING COUNCIL

Coal Options Task Force; Regular Meeting

AGENCY: Coal Options Task Force of the Pacific Northwest Electric Power and Conservation Planning Council (Northwest Power Planning Council).

ACTION: Notice of meeting to be held pursuant to the Federal Advisory Committee Act, 5 U.S.C. Appendix I, 1-4. Activities will include:

- Approval of minutes from the meeting of March 8, 1985
- Review and comment concerning generic coal plant preliminary cost, schedule and performance assumptions
- Review and comment concerning issue paper—Cost and Availability of Resources
- Review and comment concerning issue paper—Research, Development and Demonstration For Promising Resources
- Other business
- Next meeting
- Public comment

Status: Open.

SUMMARY: The Northwest Power Planning Council hereby announces a forthcoming meeting of its Coal Options Task Force.

DATE: Thursday, April 18, 1985, 9:00 a.m.

ADDRESS: The meeting will be held at the Council Central Office at 850 S.W. Broadway; Suite 1100, Portland, Oregon.

FOR FURTHER INFORMATION, CONTACT: Jeff King at (503) 222-5161.

Edward Sheets,

Executive Director.

[FR Doc. 85-8874 Filed 4-11-85; 8:45 am]

BILLING CODE 0000-00-M

SECURITIES AND EXCHANGE COMMISSION

[Release No. 34-21925; SR-BSE-84-8]

Self-Regulatory Organizations; Boston Stock Exchange, Inc.; Order Approving Proposed Rule Change

The Boston Stock Exchange, Inc. ("BSE") submitted on November 27, 1984, copies of a proposed rule change pursuant to Section 19(b)(1) of the Securities Exchange Act of 1934 ("Act") and Rule 19b-4 thereunder, to amend Chapter II, Section 33 of the BSE rules to permit the execution of agency orders received from members of a foreign exchange approved by the BSE Board of Governors. The proposed rule change is designed to ensure that agency orders transmitted directly to the floor of the BSE by members of the Montreal Exchange ("Montreal") are subject to the existing provisions of the BSE's execution guarantee rule which requires specialists to accept and guarantee all agency orders from 100 to 1299 shares.

The Commission approved the initial phase ("Phase I") of an electronic linkage with Montreal on November 1, 1984.[1]

The BSE is now planning to implement a second phase ("Phase II") of the BSE-Montreal linkage to expand the list of securities to trade through the linkage to include United States-listed securities available for trading through ITS. the BSE, in consultation with Montreal, plans to designate certain stocks as eligible for transmission via the Montreal Exchange's Registered

[1] The initial phase of the linkage permitted Montreal members to direct "marketable limit" orders in approximately 40 United States-listed Canadian national stocks (or stocks trading in the United States pursuant to unlisted trading privileges), currently available for trading through the Intermarket Trading System ("ITS"), to the BSE floor through electronic terminals located on the Montreal floor. Securities Exchange Act Release No. 21449, November 1, 1984; 49 FR 44575, November 7, 1984 (File No. SR-BSE-84-5). Orders received from Montreal are priced by the Montreal member and executed by a BSE specialist at that price or a more favorable price. When an execution is not possible under those terms, (*e.g.*, the order is mispriced or the market has moved between the time it is priced in Montreal and received in Boston) the order is automatically cancelled and a message is sent back to Montreal that the order has not been filled. Limit orders not eligible for immediate execution are not accepted in the initial phase of the linkage.

Representative Order Routing and Execution System ("MORRE").[2] When Phase II is fully operational, orders in these BSE eligible stocks will be transmitted from the Montreal Exchange to the BSE through MORRE. It is expected there will be approximately 200 BSE eligible securities that will be selected for inclusion in the MORRE library of eligible securities. Orders received on the terminal printer shall designate the Montreal member, the stock, quantity and execution price in United States dollars.[3] Upon receipt at the BSE, the order will be called out to the floor and executed by the registered specialist at the MORRE price or better. Executed trades will be cleared in the same manner as under Phase I.[4]

The BSE has stated that full implementation of Phase II, as described above, will be delayed until the summer of 1985 to provide additional time for systems enhancements by Montreal to accommodate the expansion of eligible securities and the addition of the BSE to the MORRE system.[5] The BSE has informed the Commission that, during the interim months, it plans to proceed with an expansion of the list of eligible securities, utilizing the current Phase I system. Under this stage of implementation of Phase II, order flow generated from Montreal members will be routed via BSE's Automated Data Processing system and would be called out on the floor, like any other order, to the appropriate BSE specialist. The BSE has noted that, with respect to the operational mechanics of the system, there will be no difference between orders received under Phase II and orders received under Phase I. Unlike orders in Phase I, however, all its agency orders (including the dual United States-Canadian listings included under Phase I and the United States listings traded through ITS), will be subject to the BSE's execution guarantee rule.[6]

The Montreal Exchange is a self-regulatory organization under the Quebec securities laws and is regulated by the Quebec Securities Commission,[7] which oversees the self-regulatory operations of the Exchange. Both the BSE and Montreal maintain surveillance and record retention policies to monitor the trading process. Montreal maintains a complete audit trail of all securities transactions that occur on its floor, permitting it to reconstruct the market for a particular stock and identify the time, price, size and participants of each trade in that stock. Montreal's trading regulations include provisions comparable to rules imposed by United States exchanges, including rules relating to manipulative trading practices (*e.g.*, rules regarding suitability, churning, short sales, net capital, and best execution).[8]

Under the initial phase of the linkage, the procedures for transmitting the Canadian generated trades, together with the Montreal Exchange's rules relating to record retention, have provided the record basis for conducting further inquiry if a given trade is questioned.[9] In addition, the exchanges have established a Joint Floor Committee for the purpose of overseeing implementation of the linkage and resolving any questions with respect to questioned trades.

With respect to the issue of BSE and Commission access to information from Montreal, under the terms of the written agreement establishing the linkage, both exchanges have agreed to "cooperate fully" in the investigation of any questioned trade.[10] The BSE had informed the Commission that, when necessary, it will submit information requests to Montreal regarding questioned trades, either on its own or the Commission's initiative. In addition, Rule III, Article 7003 of the Montreal Exchange allows for the furnishing of investigatory information to "any other stock exchange, securities commission or similar authority . . . relating to the business affairs, acts, conduct, practices or proceedings of any member of the Exchange." [11]

Notice of the proposed rule change together with the terms of substance of the proposed rule change was given by the issuance of a Commission release (Securities Exchange Act Release No. 21603, December 26, 1984) and by publication in the **Federal Register** (50 FR 908, January 7, 1985). No comments were received with respect to the proposed rule change.

The Commission finds that the proposed rule change is consistent with the requirements of the Act and the rules and regulation thereunder applicable to a national securities exchange and, in particular, the requirements of Section 6 and the rules and regulations thereunder.

It is therefore ordered pursuant to Section 19(b)(2) of the Act, that the above-mentioned proposed rule change be, and hereby is approved.

---

[2] MORRE is an automated small order routing and execution system possessing many of the characteristics of the PACE, MAX and SCOREX systems utilized by the Philadelphia, Midwest and Pacific Stock Exchanges, respectively. The MORRE system will accept orders entered by members of the Montreal Exchange and route these orders in BSE-eligible securities to the BSE for execution. Orders routed through the MORRE system will be automatically priced at the best United States market derived from the consolidated quotation system.

[3] Like Phase, I, Phase II will be limited to the transmission of "Marketable limit" orders from Montreal to the BSE.

[4] *See Securities Exchange Act Release No. 21449, November 1, 1984; 49 FR 44575, November 7, 1984.*

[5] *See* letter from Michael R. Lindberg, Vice President and General Counsel, BSE, to Michael Cavalier, Branch Chief, Branch of Exchange Regulation dated February 14, 1985.

[6] The BSE's execution guarantee rule requires BSE specialists to accept and guarantee execution of all agency orders in eligible securities from 100 up to 1299 shares at the best bid or offer.

[7] *See* Quebec Securities Act, R.S.Q. 1964, C. 274, as amended Title VI, Chapter 1, Section 169–185.

[8] Montreal surveillance is coordinated by two separate offices. Montreals' Department of Listing and Surveillance monitors trade activity and trade reports. Montreal also has an Exchange Examiner who is responsible for monitoring member compliance and acts as an independent overseer of floor trading activity.

[9] Montreal recordkeeping rules include the requirement that a market maker retain floor tickets and other records of executed trades for a period of five years and that records of orders received but unfilled be maintained for two years. In addition, Montreal itself maintains records of all trades generated on and through its floor for comparable periods. Montreal, like United States exchanges, imposes specific "know your customer" requirements on its members and requires a member to maintain records regarding the identity of customers.

[10] In this regard, Montreal has confirmed in writing its understanding that to "cooperate fully" requires Montreal to utilize all the resources available to it "including the full discretionary authority of the Governing Committee to require members to disclose information, in order to cooperate with the BSE in resolving questioned trades." *See* letter from Pierre Lortie, President, Montreal Exchange, to Michael Lindburg, Vice President and General Counsel, BSE, dated October 31, 1984 ("October 31 letter").

[11] Montreal has indicated that the transfer of information from Monteral to the BSE falls within the scope of Article 7003. Montreal has also indicated to the BSE that when a question regarding the integrity of a trade arises which cannot be resolved by the Montreal Floor Committee, a member's records may be taken and, if necessary, depositions formally recorded. *See* October 31 letter.

For the Commission, by the Division of Market Regulation, pursuant to delegated authority.

Dated: April 8, 1985.

John Wheeler,

Secretary.

[FR Doc. 85-8889 Filed 4-11-85; 8:45 am]

BILLING CODE 8010-01-M

[Release No. 34-21926; File No. SR-CBOE-85-10]

Self-Regulatory Organizations; Chicago Board Options Exchange Incorporated; Notice of Filing of Proposed Rule Change; Relating to Unusual Market Conditions

The Chicago Board Options Exchange, Incorporated ("CBOE"), LaSalle At Van Buren, Chicago, IL 60603, submitted on March 22, 1985, copies of a proposed rule change pursuant to Section 19(b)(1) of the Securities Exchange Act of 1934 ("Act"), 15 U.S.C. 78s(b)(1), to provide that stop and stop-limit orders in the S&P 100 Index become effective when either a transaction has occurred at the stop price or the market quotation on the same side of the market equals the price on the order.

I. Text of the Proposed Rule Change

Additions are italicized; there are no deletions.

Unusual Market Conditions

Rule 6.6. No Change.

. . . Interpretations and Policies:

.01 A stop order to buy an S&P 100 Index ("OEX") option contract becomes a market order when the option contract trades or is bid at or above the stop price. A stop order to sell an OEX option contract becomes a market order when the option contract trades or is offered at or below the stop price. A stop-limit order to buy an OEX option contract becomes a limit order when the option contract trades or is bid at or above the stop price. A stop-limit order to sell an OEX option contract becomes a limit order when the option contract trades or is offered at or below the stop price.

II. Self-Regulatory Organization's Statement of the Purpose of, and Statutory Basis for, the Proposed Rule Change

In its filing with the Commission, the self-regulatory organization included statements concerning the purpose of and basis for the proposed rule change and discussed any comments it received on the proposed rule change. The text of these statements may be examined at the places specified in Item IV below and is set forth in sections (A), (B), and (C) below.

(A) Self-Regulatory Organization's Statement of the Purpose of, and the Statutory Basis for, the Proposed Rule Change

Ordinarily, under Rule 6.53, stop orders and stop-limit orders become, respectively, market orders and limit orders when a transaction occurs at the specified stop price, or a transaction at a higher price in the case of a stop or stop-limit order to buy, or a transaction at a lower price in the case of a stop or stop-limit order to sell.

The trading pit in S&P 100 ("OEX") Index Options has become so massive that the foregoing standards for handling stop and stop-limit orders are unworkable. It is quite possible, due to the noise level and size of the OEX trading pit, for a floor broker not to be able to hear a trade causing a stop or stop-limit order to become effective.

Because current market quotations are displayed on screens, however, a floor broker is capable of seeing the relationship of the current market quotation with stop and stop-limit orders in his deck. Therefore, in order to permit the use of stop and stop-limit orders in OEX on a workable basis, the proposed rule change would cause stop and stop-limit orders to become effective based upon relationships with transactions or quotations. As proposed, a stop order or stop-limit order would become effective when either a transaction has occurred at the stop price or the market quotation on the same side of the market equals the price on the order.

Thus, for example, in the case of a stop order to buy, a market bid at the stop price would trigger the order, since the quotation would equal the stop price. A stop order to sell would become a market order once the market offer reaches the stop price.

The Exchange separates broker, dealer, and order book functions. Thus, stop orders are protected from being taken advantage of by market quotation movements effected by market-makers, who are not privy to the depth or size of stop or stop-limit orders held by floor brokers.

The proposed rule change is consistent with the Act, and in particular, Section 6(b)(5) of the Act in that the rule change is designed to protect public investors.

(B) Self-Regulatory Organization's Statement on Burden on Competition

The Exchange does not believe that this proposed rule change will impose any burden on competition.

(C) Self-Regulatory Organization's Statement on Comments on the Proposed Rule Change Received from Members, Participants or Others

Comments were neither solicited nor received.

III. Date of Effectiveness of the Proposed Rule Change and Timing for Commission Action

Within 35 days of the date of publication of this notice in the **Federal Register** or within such longer period (i) as the Commission may designate up to 90 days of such date if it finds such longer period to be appropriate and publishes its reasons for so finding or (ii) as to which the self-regulatory organization consents, the Commission will:

(A) by order approve such proposed rule change, or

(B) institute proceedings to determine whether the proposed rule change should be disapproved.

IV. Solicitation of Comments

Interested persons are invited to submit written data, views and arguments concerning the foregoing. Persons making written submission should file six copies thereof with the Secretary, Securities and Exchange Commission, 450 Fifth Street, Washington, D.C. 20549. Copies of the submission, all subsequent amendments, all written statements with respect to the proposed rule change that are filed with the Commission, and all written communications relating to the proposed rule change between the Commission and any person, other than those that may be withheld from the public in accordance with the provisions of 5 U.S.C. 552, will be available for inspection and copying at the Commission's Public Reference Room, 450 Fifth Street, NW., Washington, D.C. Copies of such filing will also be available for inspection and copying at the principal office of the above-mentioned self-regulatory organization. All submissions should refer to the file number in the caption above and should be submitted by May 3, 1985.

For the Commission by the Division of Market Regulation, pursuant to delegated authority.

April 8, 1985

John Wheeler,

Secretary.

[FR Doc. 85-8887 Filed 4-11-85; 8:45 am]

BILLING CODE 8010-01-M

[Release No. 35-23656; 70-7097]

Monongahela Power Company et al. Notice of Proposed Issuance and Sale of Short-Term Notes to Banks and Commercial Paper to Dealer and Exception from Competitive Bidding

April 8, 1985

Monogahela Power Company ("Monongahela"), 1310 Fairmont Avenue, Fairmont, West Virginia 26554, The Potomac Edison Company ("Potomac"), Downsville Pike, Hagerstown, Maryland 21740, and West Penn Power Company ("West Penn"), 800 Cabin Hill Drive, Greensburg, Pennsylvania 15601, (collectively, the "Companies"), wholly-owned electric utility subsidiaries of Allegheny Power System, Inc., a registered holding company, have filed an application with this Commission pursuant to Section 6(b) of the Public Utility Holding Company Act of 1935 ("Act") and Rule 50(a)(5) thereunder.

The companies propose to issue and sell short-term notes from time to time to banks and to a dealer in commercial paper through December 31, 1986, in aggregate principal amounts not to exceed $60 million, $70 million, and $80 million outstanding at any one time for Monongahela, Potomac, and West Penn, respectively. These amounts include any short-term debt still outstanding under this Commission's prior authorization (HCAR No. 23181 (December 27, 1983)).

Each note payable to a bank will be dated as of the date of the borrowing which it evidences, will mature not more than 270 days after the date of issuance or renewal thereof, and will bear interest at no greater than the then current prime or equivalent interest rate of the bank at which the borrowing is made. The notes may or may not have prepayment provisions.

The Companies have agreed to pay for lines of credit with a group of banks of maintaining compensating balances (no greater than 3% of all or a portion of the line of credit) and/or by paying an annual cash fee (no greater than ¼ of 1% of all or the balance of the line of credit). Such cash balances are maintained in many cases for the purpose of meeting regular operating requirements. If the balances were maintained solely to fulfill compensating balance requirements, the effective cost of bank borrowing under the lines of credit would be no more than 10.825% based on a prime commerical credit rate of 10.5%.

The commercial paper will not be prepayable and will have varying maturities, none more than 270 days. The notes will be sold directly to a dealer at a discount not in excess of the discount rate per annum prevailing at the time of issuance for commercial paper of comparable quality and of the particular maturity. The dealer may reoffer the commercial paper to not more than 200 of its customers at a discount rate of 1/8 of 1% per annum less than the discount rate to the Companies. An exception from the competitive bidding requirements of Rule 50 has been requested for the proposed issuance and sale of commercial paper notes.

The proceeds from the borrowings will be used for general corporate purposes, including the financing of construction and property acquisitions.

The application and any amendments thereto are available for public inspection through the Commission's Office of Public Reference. Interested persons wishing to comment or request a hearing should submit their views in writing by May 6, 1985, to the Secretary, Securities and Exchange Commission, Washington, D.C. 20549, and serve a copy on the applicants at the addresses specified above. Proof of service (by affidavit or, in case of an attorney at law, by certificate) should be filed with the request. Any request for a hearing shall identify specifically the issues of fact or law that are disputed. A person who so requests will be notified of any hearing, if ordered, and will receive a copy of any notice or order issued in this matter. After said date, the application, as filed or as it may be amended, may be granted.

For the Commission, by the Division of Investment Management, pursuant to delegated authority.

John Wheeler,

Secretary.

[FR Doc. 85-8888 Filed 4-11-85; 8:45 am]

BILLING CODE 8010-01-M

SMALL BUSINESS ADMINISTRATION

[Designation of Disaster Loan Area #6253; Amdt. #1]

Texas; Declaration of Disaster Loan Area

The above numbered Designation (50 FR 2640) is amended to include the County of Wibarger. All other information remains the same, i.e. the termination date for filing applications is the close of business on October 10, 1985.

(Catalog of Federal Domestic Assistance Program Nos. 59002 and 59008)

Dated: April 5, 1985.

James C. Sanders,

Administrator.

[FR Doc. 85-8795 Filed 4-11-85; 8:45 am]

BILLING CODE 8025-01-M

DEPARTMENT OF TRANSPORTATION

All-Cargo Authority in Domestic Charter Section 401 Certificates

AGENCY: Department of Transportation.

ACTION: Notice of order to Show Cause (Order 85-4-14), Docket 43026.

SUMMARY: The Department is directing all interested persons to show cause why it should not issue an order amending all outstanding charter certificates by removing a condition prohibiting all-cargo air transportation.

DATES: Persons wishing to file objections shall do so no later than May 1, 1985; answers to objections shall be filed no later than May 13, 1985.

ADDRESSES: Objections and answers to objections should be filed in Docket 43026 and addressed to the Documentary Services Division (C-55), U.S. Department of Transportation, 400 Seventh Street, SW., Room 4107, Washington, D.C. 20590, and should be served upon all certificated air carriers.

FOR FURTHER INFORMATION CONTACT: Steven B. Farbman, Aviation Enforcement and Proceedings (C-70), U.S. Department of Transportation, 400 Seventh Street, SW., Room 4116, Washington, D.C. 20590, (202) 426-7631.

Dated: April 4, 1985.

Matthew V. Scocozza,

Assistant Secretary for Policy and International Affairs.

[FR Doc. 85-8833 Filed 4-11-85; 8:45 am]

BILLING CODE 4910-62-M

Caribbean Air Cargo Co., Ltd; Order To Show Cause

AGENCY: Department of Transportation.

ACTION: Notice of order to show cause: Order 85-4-32.

SUMMARY: The Department proposes to approve the following application:

Applicant: Caribbean Air Cargo Company, Ltd. (Caricargo).

Application Dates: June 25, 1980, and September 15, 1983, Docket: 41703.

Authority Proposed: Initial foreign air carrier permit to engage in nonscheduled foreign air transportation of property and mail between the coterminal points Barbados and Trinidad and Tobago and the coterminal points San Juan, Puerto Rico; Miami,

Florida; Houston, Texas; and New York, New York via named Caribbean intermediate points.

Authority Tentatively Denied: Miami-Belize, Miami-Dominican Republic turnaround services.

Objections: All interested persons having objections to the Department's tentative findings and conclusions that this authority should be granted in part and denied in part, as described in order cited above, shall, NO LATER THAN May 10, 1985, file a statement of such objections with the Department of Transportation (20 copies) and mail copies to the applicant, the Department of State, and the Ambassadors of Barbados and Trinidad and Tobago in Washington, D.C. A statement of objections must cite the docket numbers and must include a summary of testimony, statistical data, or other such supporting evidence.

If no objections are filed, the Department will enter an order which will, subject to disapproval by the President, make final the Department's tentative findings and conclusions and issue the proposed permit.

ADDRESSES:

Docket 41702, Documentary Services Division, C-55, Department of Transportation, 400 7th Street, SW., Washington, D.C. 20590

Applicant: Caribbean Air Cargo Company, Ltd., c/o Harry A. Bowen, Esq., Suite 350, 2020 K Street, NW., Washington, D.C. 20006

To obtain a copy of the order, write to the Documentary Services Division (C-55), at the above address.

FOR FURTHER INFORMATION CONTACT: Chuck Hedges, Licensing Division, Office of Aviation Operations, Department of Transportation, (202) 755-3805.

Matthew V. Scocozza,

Assistant Secretary for Policy and International Affairs.

Summary of Application

[Dockets 41703]

Homeland Countries: Barbados and Trinidad and Tobago

Current Exemption Issued By: Order 83-4-11, dated April 15, 1983

Evidence Incorporated by Reference from: Docket 38379

Authority Covered By Bilateral Agreement: Exchange of Notes with Barbados

Reciprocity and Comity As Basis for Authority Sought: Yes—Adequate Comity and Reciprocity exist.

Holds Government License For Authority Sought: Exhibit #5

Operating History: Currently operates nonscheduled and charter cargo service to Miami, Houston, San Juan and New York from Trinidad and Tobago and Barbados

Aircraft Owned (0) And Leased (L): 2 Boeing 707-351C (0), 2 C-46 (0)

Aircraft Maintenance performed By: Caribbean Air Cargo Co., Ltd.

Financial indicators (as at)—	Dec. 31, 1982 (000)	Dec. 31, 1981 (000)
Total assets	$16.6	NA
Total liabilities	12.6	NA
Owners' equity	4.0	NA
Operating profit (Loss)-12 months ended	1.3	($.009)

Majority Ownership By Nationals Of: Barbados, Trinidad and Tobago—Government-owned

Effective Control By Nationals Of: Barbados, Trinidad and Tobago—Government-controlled

Insurance Coverage: Meets requirements of 14 CFR 205

Insurance Refused Or Involuntarily Cancelled During Last 3 years: No

Refused Debt Financing Last 3 years: No

Defaulted On Transportation Commitments Last 3 Years: No

Failed To meet Current Financial Obligations Last 3 Years: No

Safety Or Tariff Violations During Last 5 Years: No

Subscribers To Standard Permit Conditions Regarding Insurance And Annex 6 Of Chicago Convention And C.A.B. Agreement 18900: Yes

Near-term Annual Fuel Consumption Exceeds 10 million gallons: No

[FR Doc. 85-8832 Filed 4-11-85; 8:45 am]

BILLING CODE 4910-62-M

Applications for Certificates of Public Convenience and Necessity and Foreign Air Carrier Permits filed under Subpart Q of Department of Transportation's Procedural Regulations; Week Ended April 5, 1985.

Subpart Q Applications

The due date for answers, conforming application, or motions to modify scope are set forth below for each application. Following the answer period DOT may process the application by expedited procedures. Such procedures may consist of the adoption of a show-cause order, a tentative order, or in appropriate cases a final order without further proceedings. (See 14 CFR 302.1701 et seq.)

Date filed	Docket No.	Description
Apr. 1, 1985	43007	Trans World Airlines, Inc., 605 Third Avenue, New York, New York 10158. Application of Trans World Airlines, Inc., pursuant to section 401 of the Act and Subpart Q of the Regulations applies for an amendment of its certificate of public convenience and necessity authorizing it to serve between St. Louis, Missouri and Toronto, Canada. Conforming Applications, Motions to Modify Scope and Answers may be filed by April 29, 1985.
Do	43008	Trans-Artic Ltd. d/b/a Polar Alaska Enterprises, Inc. in Alaska, c/o Jane K. Matz, 2440 SW. 151st Street, Seattle, Washington 98166. Application of Trans-Artic Ltd. d/b/a/ Polar Alaska Enterprises, Inc. in Alaska pursuant to section 401 of the Act and Subpart Q of the Regulations applies for a certificate of public convenience and necessity to engage in interstate air transportation of persons, property and mail between the terminal point Fairbanks, Alaska, Nuiqsut, Alaska and the terminal point Prudhoe Bay, Alaska, Conforming Applications, Motions to Modify Scope and Answers may be filed by April 29, 1985.
Apr. 2, 1985	43009	Sierra Trans Air, Inc., c/o Stephen A. Alterman, Meyers & Alterman, 1710 Rhode Island Avenue NW., Second Floor, Washington, D.C. 20036. Application of Sierra Trans Air, Inc. pursuant to section 401(d)(3) of the Act and Subpart Q of the Regulations requests permanent authority to engage in interstate and overseas charter air transportation of persons, property and mail: Between any point in any state in the United States or the District of Columbia, or any territory or possession of the United States and any other point in any State of the United States or the District of Columbia, or any territory or possession of the United States. Conforming Applications, Motions to Modify Scope and Answers may be filed by April 30, 1985.
Do	43011	China Airlines, Limited, c/o George C. Pendleton, Anderson & Pendleton, 1000 Connecticut Avenue NW., Suite 707, Washington, D.C. 20036. Application of China Airlines, Limited, pursuant to section 402 of the Act and Subpart Q of the Regulations requests an amendment to its foreign air carrier permit to authorize it to engage in the foreign air transportation of persons, property and mail in scheduled and non-scheduled service to and from the coterminal Dallas, Texas. With this amendment, Applicant's permit would authorize it to engage in foreign air transportation of persons, property and mail, as follows: Between the coterminal points Taipei and Kaohsiung, Taiwan; intermediate points in the Pacific, and the coterminal points Guam; Honolulu, Hawaii; Seattle, Washington; Los Angeles and San Francisco, California; Dallas, Texas; New York, New York; and beyond to Amsterdam, The Netherlands. Answer may be filed by April 30, 1985.

Date filed	Docket No.	Description
Do	43013	People Express Airlines, Inc., c/o Robert E. Cohn, Shaw, Pittman, Potts & Trowbridge, 1800 M Street NW., Washington, D.C. 20036. Conforming Application of People Express Airlines, Inc., pursuant to section 401 of the Act and Subpart Q of the Regulations for an amendment of its certificate of public convenience and necessary authorizing it to operate nonstop service between Newark, New Jersey and Manchester, England Answers may be filed by April 16, 1985.
Apr. 3, 1985	43016	Trinidad and Tabago (BWIA International) Airways Corporation, c/o John L. Richardson, Verner, Liipfert, Bernhard, McPherson and Hand, Suite 1000, 1660 L Street NW., Washington, D.C. 20036. Application of Trinidad and Tobago Airways Corporation pursuant to section 402 of the Act and Subpart Q of the Regulations requests an amendment to its permit, so as to authorize BWIA to engage in the foreign air transportation of persons, property and mail in scheduled service as follows: Between the terminal point New York, New York, the intermediate point Grenada, and the terminal point Port of Spain, Trinidad. Answers may be filed by May 1, 1985.
Apr. 4, 1985	43022	Air Transport International, Inc., c/o James M. Burger, Burger & Kendall, 1726 M Street NW., Wasington, D.C. 20036. Application of Air Transport International, Inc. Pursuant to section 401 of the Act and Subpart Q of the Regulations requests a certificate of public convenience and necessity authorizing it to engage in scheduled air transportation of persons, property and mail between and among all points, territories and possessions of the United States. Conforming Applications, Motions to Modify Scope and Answers may be filed by May 2, 1985.
Do	43023	Air Ontario Limited, c/o Elisabeth M. Pendleton, Shaw, Pittman, Potts & Trowbridge, 1800 M Street NW., Washington, D.C. 20036. Application of Air Ontario Limited pursuant to section 402 of the Act and Subpart Q of the Regulations to authorize it to engage in foreign scheduled air transportation of persons, property and mail between cleveland, Ohio and Toronto, Ontario. Answers may be filed by May 2, 1985.
Apr. 2, 1985	42570	Bahamasair Holdings Ltd., c/o George U. Carneal, Hogan & Hartson, 815 Connecticut Avenue NW., Washington, D.C. 20006. Second Amendment to the Application of Bahamasair Holdings Ltd. for renewal and amendment of its foreign air carrier. Bahamasair requests that its pending application should be amended by adding Orlando, Florida to the new coterminal points being sought. Answer may be filed by April 30, 1985.
Apr. 2, 1985	42952	Delta Air Lines, Inc., Hartfield Atlanta Int'l. Airport, Atlanta, Georgia 30320. Amendment No. 1 to the Application of Delta Air Lines, Inc. to add Dallas/Ft. Worth, Texas-Tokyo, Japan to the route segments set forth in the original application. Answers may be filed by May 2, 1985.

Phyllis T. Kayor,
Chief, Documentary Services Division.
[FR Doc. 85-8831 Filed 4-11-85; 8:45 am]
BILLING CODE 4910-13-M

Federal Aviation Administration

General Aviation Flight Data Recorder; Availability of Technical Standard Order and Request for Comment

AGENCY: Federal Aviation Administration (FAA), DOT.

ACTION: Notice of availability of technical standard order (TSO) and request for comment.

SUMMARY: The proposed TSO-C111 prescribes the minimum performance standard that General Aviation Flight Data Recorder must meet in order to be identified with the marking "TSO-C111."

DATE: Comments must identify the TSO file number and be received on or before July 26, 1985.

ADDRESSES: Send all comments on the proposed Technical Standard Order to:
Federal Aviation Administration, Policy and Procedures Branch, AWS-110, Aircraft Engineering Division, Office of Airworthiness—File No. TSO-C111, 800 Independence Avenue SW., Washington, D.C. 20591
Or Deliver Comments To: Room 335, 800 Independence Avenue SW., Washington, D.C. 20591.

FOR FURTHER INFORMATION CONTACT: Ms. Bobbie J. Smith, Policy and Procedures Branch, AWS-110, Aircraft Engineering Division, Office of Airworthiness Federal Aviation Administration, 800 Independence Avenue SW., Washington, D.C. 20591, Telephone (202) 426-8395.

Comments received on the proposed Technical Standard Order may be inspected, before and after the comment closing date in Room 335, FAA Headquarters Building (FOB-10A), 800 Independence Avenue SW., Washington, D.C. 20591, weekdays except Federal holidays, between 8:30 a.m. and 4:30 p.m.

SUPPLEMENTARY INFORMATION:

Comments Invited

Interested persons are invited to comment on the proposed TSO listed in this notice by submitting such written data, views, or arguments as they submitted to the address specified above. All communications received on or before the closing date for comments specified above will be considered by the Director of Airworthiness before issuing the final TSO.

How To Obtain Copies

A copy of the proposed TSO-C111 may be obtained by contacting the person under "For Further Information Contact." TSO-C111 references Society of Automotive Engineers, Inc. (SAE), Aerospace Standard (AS) Document No. 8039 dated January 1985 for the minimum performance standard and Radio Technical Commission for Aeronautics (RTCA) Document Nos. DO-160B dated January 1980 and DO-178 dated November 18, 1981, for the environmental standard and software requirement. SAE AS Document No. 8039 may be purchased from the Society of Automotive Engineers, Inc., 400 Commonwealth Drive, Warrendale, PA 15096, and RTCA Document Nos. DO-160B and DO-178 may be purchased from the Radio Technical Commission for Aeronautics Secretariat, One McPherson Square, 1425 K Street NW., Suite 500, Washington, D.C. 20005.

Issued in Washington, D.C., on April 5, 1985.

Thomas E. McSweeny,
Manager, Aircraft Engineering.
[FR Doc. 85-8331 Filed 4-11-85; 8:45 am]
BILLING CODE 4910-13-M

Sunshine Act Meetings

Federal Register
Vol. 50, No. 71
Friday, April 12, 1985

This section of the FEDERAL REGISTER contains notices of meetings published under the "Government in the Sunshine Act" (Pub. L. 94-409) 5 U.S.C. 552b(e)(3).

CONTENTS

1

CONSUMER PRODUCT SAFETY COMMISSION

TIME AND DATE: Thursday, April 18, 1985, see times below.

LOCATION: Room 456, Westwood Towers, 5401 Westbard Avenue, Bethesda, Maryland.

STATUS: Open to the Public—8:30 a.m.

1. Commission Staff Briefing

The staff will brief the Commission on various matters.

MATTERS TO BE CONSIDERED: Closed to the Public—9:30 a.m.

2. Compliance Status Report

The staff will brief the Commission on various Compliance matters.

FOR A RECORDED MESSAGE CONTAINING THE LATEST AGENDA INFORMATION, CALL: 301-492-5709.

CONTACT PERSON FOR ADDITIONAL INFORMATION: Sheldon D. Butts, Office of the Secretary, 5401 Westbard Ave., Bethesda, Md. 20207 301-492-6800.

Dated: April 10, 1985.

Sheldon D. Butts,

Deputy Secretary.

[FR Doc. 85-8930 Filed 85; 11:09 am]

BILLING CODE 6355-01-M

2

EQUAL EMPLOYMENT OPPORTUNITY COMMISSION

DATE AND TIME: Monday, April 22, 1985, 2:00 p.m. (eastern time).

PLACE: Clarence M. Mitchell, Jr., Conference Room No. 200-C on the 2nd Floor of the Columbia Plaza Office Building, 2401 "E" Street, NW., Washington, D.C. 20507.

STATUS: Closed to the public.

MATTER TO BE CONSIDERED:

Closed

1. Litigation Authorization; GC Recommendations
2. Proposed Commission Decision
3. Options Paper on Enforcement of an ORA Decision

Note.—Any matter not discussed or concluded may be carried over to a later meeting. (In addition to publishing notices on EEOC Commission Meetings in the **Federal Register**, the Commission also provides a recorded announcement a full week in advance on future Commission sessions. Please telephone (202) 634-6748 at all times for information on these meetings).

CONTACT PERSON FOR MORE INFORMATION: Cynthia C. Matthews, Executive Officer, Executive Secretariat at (202) 634-6748.

Dated: April 10, 1985.

Johnnie Johnson,

Attorney-Advisor.

[FR Doc. 85-8986 Filed 4-10-85; 3:34 pm]

BILLING CODE 6750-06-M

3

FEDERAL DEPOSIT INSURANCE CORPORATION

Agency Meeting

Pursuant to the provisions of the "Government in the Sunshine Act" (5 U.S.C. 552b), notice is hereby given that at 3:43 p.m. on Friday, April 5, 1985, the Board of Directors of the Federal Deposit Insurance Corporation met in closed session, by telephone conference call, to: (1) Receive bids for the purchase of certain assets of and the assumption of the liability to pay deposits made in Capistrano National Bank, San Juan Capistrano, California, which was closed by the Senior Deputy Comptroller for Bank Supervision, Office of the Comptroller of the Currency, on Friday, April 5, 1985; (2) accept the bid for the transaction submitted by Farmers and Merchants Bank of Long Beach, Long Beach, California, an insured State member bank; and (3) provide such financial assistance, pursuant to section 13(c)(2) of the Federal Deposit Insurance Act (12 U.S.C. 1823(c)(2)), as was necessary to effect the purchase and assumption transaction.

In calling the meeting, the Board determined, on motion of Chairman William M. Isaac, seconded by Director Irvine H. Sprague (Appointive), concurred in by Mr. H. Joe Selby, acting in the place and stead of Director C.T. Conover (Comptroller of the Currency), that Corporation business required its consideration of the matters on less than seven days' notice to the public; that no earlier notice of the meeting was practicable; that the public interest did not require consideration of the matters in a meeting open to public observation; and that the matters could be considered in a closed meeting pursuant to subsections (c)(8), (c)(9)(A)(ii), and (c)(9)(B) of the "Government in the Sunshine Act" (5 U.S.C. 552b(c)(8), (c)(9)(A)(ii), and (c)(9)(B)).

Dated: April 10, 1985.

Federal Deposit Insurance Corporation.

Hoyle L. Robinson,

Executive Secretary.

[FR Doc. 85-8959 Filed 4-10-85; 1:46 pm]

BILLING CODE 6714-01-M

4

FEDERAL ENERGY REGULATORY COMMISSION

"FEDERAL REGISTER" CITATION OF PREVIOUS ANNOUNCEMENT: 49 FR 13912, April 9, 1985.

PREVIOUSLY ANNOUNCED TIME AND DATE OF MEETING: April 10, 1985, 10:00 a.m.

CHANGE IN THE MEETING: The following Docket Number and Company have been added:

Item No., Docket No. and Company

M-2

PL85-1-000, Statement of Policy on the Regulatory Treatment of Payments made In Lieu of Take-or-Pay

Kenneth F. Plumb,

Secretary.

[FR Doc. 85-8942 Filed 4-10-85; 1:46 pm]

BILLING CODE 6717-02-M

5

FEDERAL HOME LOAN BANK BOARD

DATES AND TIMES: Wednesday, April 17, 1985, at 9:00 a.m. Thursday, April 18, 1985, at 1:00 p.m.

PLACE: In the Board Room, 6th Floor, 1700 G St., NW., Washington, D.C.

STATUS: Open meetings.

CONTACT PERSON FOR MORE INFORMATION: Ms. Gravlee (202-377-6677).

MATTERS TO BE CONSIDERED:

Meeting of Wednesday, April 17, 1985

Settlements of insurance
Mortgage disclosures
Combinations involving Federal stock associations
Acquisition of control of insured institutions; delegations

Meeting of Thursday, April 18, 1985

Loan-loss deferrals
Acquisition, development and construction loans
Subordinated debt
Over-the-counter options

No. 3, April 10, 1985.

John M. Buckley, Jr.,

Acting Secretary.

[FR Doc. 85-8966 Filed 4-10-85; 2:02 pm]

BILLING CODE 6720-01-M

6

FEDERAL RESERVE SYSTEM

TIME AND DATE: 10:00 a.m., Wednesday, April 17, 1985.

PLACE: Marriner S. Eccles Federal Reserve Board Building, C Street entrance between 20th and 21st Streets, NW., Washington, D.C. 20551.

STATUS: Open.

MATTERS TO BE CONSIDERED:

Summary Agenda: Because of its routine nature, no substantive discussion of the following item is anticipated. This matter will be voted on without discussion unless a member of the Board requests that the item be moved to the discussion agenda.

1. Proposal to extend, with revision, the Commercial Bank Report of Consumer Installment Credit (FR 2571).

Discussion Agenda:

2. Proposed revisions to the Board's Equal Employment Opportunity Regulation. (Proposed earlier for public comment; Docket No. R-0527)

3. Any items carried forward from a previously announced meeting.

Note.—This meeting will be recorded for the benefit of those unable to attend. Cassettes will be available for listening in the Board's Freedom of information Office, and copies may be ordered for $5 per cassette by calling (202) 452-3684 or by writing to: Freedom of information Office, Board of Governors of the Federal Reserve System, Washington, D.C. 20551.

CONTACT PERSON FOR MORE INFORMATION: Mr. Joseph R. Coyne, Assistant to the Board (202) 452-3204.

Dated: April 9, 1985.

William W. Wiles,

Secretary of the Board.

[FR Doc. 85-8907 Filed 4-9-85; 4:53 pm]

BILLING CODE 6210-01-M

7

FEDERAL RESERVE SYSTEM

TIME AND DATE: Approximately 10:30 a.m., Wednesday, April 17, 1985, following a recess at the conclusion of the open meeting.

PLACE: Marriner S. Eccles Federal Reserve Board Building, C Street entrance between 20th and 21th Street, NW., Washington, D.C. 20551.

STATUS: Closed.

MATTERS TO BE CONSIDERED:

1. Personnel actions (appointments, promotions, assignments, reassignments, and salary actions) involving individual Federal Reserve System employees.

2. Any items carried forward from a previously announced meeting.

CONTACT PERSON FOR MORE INFORMATION: Mr. Joseph R. Coyne, Assistant to the Board, (202) 452-3204. You may call (202) 452-3207, beginning at approximately 5 p.m. two business days before this meeting, for a recorded announcement of bank and bank holding company applications scheduled for the meeting.

Dated: April 9, 1985.

William W. Wiles,

Secretary of the Board.

[FR Doc. 85-8908 Filed 4-9-85; 4:53 pm]

BILLING CODE 6210-01-M

8

NATIONAL LABOR RELATIONS BOARD

TIME AND DATE: 9:30 a.m., Wednesday, April 17, 1985.

PLACE: Board Conference Room, Sixth Floor, 1717 Pennsylvania Avenue, NW.

STATUS: Closed to public observation pursuant to 5 U.S.C. Section 552b (c)(2) (internal personnel rules and practices) and (c)(6) (personal information where disclosure would constitute a clearly unwarranted invasion of personal privacy).

MATTERS TO BE CONSIDERED: Selection of Regional Director for Region 30, Milwaukee, Wisconsin.

CONTACT PERSON FOR MORE INFORMATION: John C. Truesdale, Executive Secretary, Washington, D.C. 20570, Telephone: (202) 254-9430.

Dated: Washington, D.C., April 9, 1985.

By direction of the Board.

John C. Truesdale,

Executive Secretary, National Labor Relations Board.

[FR Doc. 85-8965 Filed 4-10-85; 2:02 pm]

BILLING CODE 7545-01-M

9

POSTAL RATE COMMISSION

TIME AND DATE: 10:00 a.m., Thursday, April 18, 1985.

PLACE: Conference Room, Room 300, 1333 H Street, NW., Washington, DC.

STATUS: Closed.

MATTERS TO BE CONSIDERED: Docket No. C85-1, Compliant of Advo-Systems, Inc.

CONTACT PERSON FOR MORE INFORMATION: Charles L. Clapp, Secretary, Postal Rate Commission, Room 300, 1333 H Street, NW., Washington, D.C. 20268, Telephone (202) 789-6840.

Chales L. Clapp,

Secretary.

[FR Doc. 85-8958 Filed 4-10-85; 1:46 pm]

BILLING CODE 7715-01-M

federal register

Friday
April 12, 1985

Part II

Department of the Interior

Bureau of Land Management

43 CFR Parts 3500, 3510, 3520, 3530, 3540, 3550, 3560, 3570 and 3580

Revision of Regulations Covering Leasing of Solid Minerals Other Than Coal and Oil Shale; Proposed Rule

DEPARTMENT OF THE INTERIOR

Bureau of Land Management

43 CFR Parts 3500, 3510, 3520, 3530, 3540, 3550, 3560, 3570, and 3580

Leasing of Solid Minerals Other Than Coal and Oil Shale; Revision of Regulations Covering Leasing of Solid Minerals Other Than Coal and Oil Shale

AGENCY: Bureau of Land Management, Interior.

ACTION: Proposed rulemaking.

SUMMARY: This proposed rulemaking would totally revise the provisions of 43 CFR Group 3500 concerning leasing of solid minerals other than coal and oil shale, to reduce the regulatory burden imposed on the public, to streamline and clarify the existing provisions, to change the format to address specific minerals individually and to achieve a number of miscellaneous purposes under the authority granted the Secretary of the Interior by various statutes.

DATE: Comments should be submitted by June 11, 1985.

Comments received or postmarked after the above date may not be considered as part of the decisionmaking process on issuance of a final rulemaking.

ADDRESS: Comments should be sent to: Director (140), Bureau of Land Management, 1800 C Street NW., Washington, D.C. 20240.

Comments will be available for public review in Room 5555 of the above address during regular business hours (7:45 a.m. to 4:15 p.m.), Monday through Friday.

FOR FURTHER INFORMATION CONTACT:

Marcia Rohn, (202) 343-2893

or

Zareh Mozian, (202) 343-2456.

SUPPLEMENTARY INFORMATION: This proposed rulemaking would totally revise the regulations in 43 CFR Group 3500—Leasing of Solid Minerals Other than Coal and Oil Shale. This proposed rulemaking is a result of the review of the Group 3500 regulations discussed in the final rulemaking that appeared in the **Federal Register** of April 25, 1984 (49 FR 17892). This proposed rulemaking will complete the streamlining and clarifying of Group 3500 that began with the amendments made by the final rulemaking of April 25, 1984. The format has been changed to address specific minerals individually. The proposed rulemaking would retain in Part 3500 those provisions that are applicable to all minerals covered by Group 3500 and would break the mineral-specific sections into separate parts as follows: Part 3510—Phosphate; Part 3520—Sodium; Part 3530—Potassium; Part 3540—Sulphur; Part 3550—Asphalt in Oklahoma and Gilsonite; Part 3560—Hardrock Minerals; and Part 3570—Special Leasing Areas. This breakdown by mineral should prove helpful to the users of these regulations. The Bureau of Land Management has prepared a redesignation table comparing the sections of the proposed rulemaking with the corresponding sections of the existing regulations. The public may obtain a copy of this table by requesting it from the above address. The proposed rulemaking is a part of a continuing effort by the Bureau to update, streamline and clarify its regulations to better serve the public, while at the same time lessening the regulatory burden imposed on the public. The public is requested to include in their comments suggestions that they believe would improve the proposed rulemaking.

One of the changes made by the proposed rulemaking is the inclusion of a section within each part covering a specific mineral which sets forth pertinent regulations that affect that mineral. Those sections are designed to serve as an aid to the user only and would not exclude the applicability of any regulations not cited. The public is asked to comment on whether these references are helpful and should they or others be in the final rulemaking.

As part of the mineral-specific provisions of the proposed rulemaking, the non-competitive leasing provisions for gilsonite would be replaced with an all competitive system. As of the date of publication of this proposed rulemaking, the Bureau of Land Management will no longer issue prospecting permits for gilsonite. If this proposed rulemaking is adopted as a final rulemaking, all pending permit applications will be rejected. All existing prospecting permits will be handled under existing regulations, with the right to obtain a preference right lease if all requirements have been met.

The Department of the Interior has been petitioned to change the allowable acreage holdings for potassium. The question of whether to change the allowable acreage for potassium and hardrock leases, where the limits is not set by statute, is being studied by the Department. The public is asked to submit comments on this question to assist the Department in its deliberations. The final rulemaking will reflect the decision made on this subject.

The proposed rulemaking follows the language of the existing regulations on the royalty rate for asphalt in Oklahoma, which is not less than $.25 per two thousand pounds of marketable production. This royalty rate has been the same for many years and the Department of the Interior is considering the need to increase the royalty rate. The public is requested to comment on this issue, with specific reasons why the rate should or should not be changed.

The proposed rulemaking would add a new Subpart 3575 which implements sections 403, 404 and 1312 of the Alaska National Interest Lands Conservation Act (16 U.S.C. 460mm-2-460mm-4). The Act authorizes the leasing of leasable and hardrock minerals within the White Mountains National Recreation Area and grants holders of certain unperfected mining claims a preference right to lease those minerals.

The proposed rulemaking would eliminate the provisions of § 3563.1 pertaining to leasing of silica sands and other nonmetallic minerals in certain lands in Nevada. This deletion is required because Executive Order No. 5015, which withdrew these lands and provided for such leasing, has been rescinded. The proposed rulemaking also would eliminate the provisions of § 3563.2 that authorize the leasing of sand and gravel in certain lands patented to the State of Nevada. The authorizing statute does not specify the method of disposal of these deposits and the Department of the Interior has determined that, for uniformity, they should be disposed of under the Materials Act of 1947 (30 U.S.C. 601 et seq.). As a result of the change that would be made by this proposed rulemaking, future disposals of such sand and gravel would be made only under the regulations in Group 3600 which implement the Materials Act and no further leases would be issued under § 3563.2 after the date of publication of this proposed rulemaking. Any outstanding leases would be managed in accordance with the existing provisions of § 3563.2. However, such leases would be renewed only for the lessee of record on the effective date of the final rulemaking resulting from this proposed rulemaking.

The proposed rulemaking would cross-reference the provisions of 43 CFR 2920 to allow individuals to obtain mineral exploration licenses for gathering in an environmentally sound way needed resource and geological data. In addition, the proposed rulemaking would add specific requirements unique only to mineral exploration licenses. Another change that would be made by the proposed rulemaking, to facilitate prompt environmental review, is a requirement

that an applicant file an exploration plan with an application for a prospecting permit. The existing regulations require the filing of an exploration plan prior to entry on the lands for prospecting purposes.

The public is also requested to review this revision carefully to be certain that no procedures that are necessary to the efficient operation of the programs covered by the regulations have been omitted.

The principal author of this proposed rulemaking is Marcia Rohn, Division of Solid Mineral Leasing, assisted by the staff of the Office of Legislation and Regulatory Management, all of the Bureau of Land Management, and the staff of the Office of the Solicitor, Department of the Interior.

It is hereby determined that this rulemaking does not constitute a major Federal action significantly affecting the quality of the human environment and that no detailed statement pursuant to section 102(2)(C) of the National Environmental Policy Act of 1969 (42 U.S.C. 4332(2)(C)) is required.

The Department of the Interior has determined that this document is not a major rule under Executive Order 12291 and that it will not have a significant economic effect on a substantial number of small entities under the Regulatory Flexibility Act (5 U.S.C. 601 et seq.).

The proposed rulemaking is a revision of existing regulations and would not change in any substantive manner the procedures imposed by the existing regulations. The principal purpose of the proposed rulemaking is to streamline and simplify the procedures contained in the existing regulations. This will benefit all users equally.

The information collection requirements in this proposed rulemaking have already been approved by the Office of Management and Budget under 44 U.S.C. 3507 and assigned clearance numbers 1004-0030, 1004-0121 and 1004-0142.

List of Subjects

43 CFR Part 3500

Mineral royalties, Public lands—classification, Public lands—mineral resources, Surety bonds.

43 CFR Part 3510

Administrative practice and procedure, Mines, Public lands—mineral resources, Surety bonds.

43 CFR Part 3520

Administrative practice and procedure, Mines, Public lands—mineral resources, Surety bonds.

43 CFR Part 3530

Administrative practice and procedure, Mines, Public lands—mineral resources, Surety bonds.

43 CFR Part 3540

Administrative practice and procedure, Mines, Public lands—mineral resources, Surety bonds.

43 CFR Part 3550

Administrative practice and procedure, Mines, Public lands—mineral resources, Surety bonds.

43 CFR Part 3560

Administrative practice and procedure, Mines, Public lands—mineral resources, Surety bonds.

43 CFR Part 3570

Administrative practice and procedure, Mines, Public lands—mineral resources, Surety bonds.

43 CFR Part 3580

Mineral royalties, Public lands—mineral resources.

Under the authority of the Mineral Leasing Act of 1920, as amended and supplemented (30 U.S.C. 181 et seq.), the Mineral Leasing Act for Acquired Lands of 1947, as amended (30 U.S.C. 351-359), the Federal Land Policy and Management Act of 1976 (43 U.S.C. 1701 et seq.), Independent Offices Appropriation Act of 1952 (31 U.S.C. 483a), Reorganization Plan No. 3 of 1946 (16 U.S.C. 520), and the Alaska National Interest Lands Conservation Act (16 U.S.C. 460mm—2—460mm—4) it is proposed to revise Parts 3500, 3510, 3520, 3530, 3540, 3550, 3560, and 3570, Group 3500, Subchapter C, Chapter II of Title 43 of the Code of Federal Regulations as set forth below:

Group 3500—[Revised]

1. Group 3500 is revised:

A. By redesignating part 3570 as part 3580:

B. By Revising Parts 3500, 3510, 3520, 3530, 3540, 3550, and 3560, and adding a new part 3570 to read as follows:

Group 3500—Leasing of Solid Minerals Other than Coal and Oil Shale

Note.—The information collection requirements contained in Parts 3500, 3510, 3520, 3530, 3540, 3550, 3560, and 3570 have been approved by the Office of Management and Budget under 44 U.S.C. 3507 and assigned clearance numbers 1004-0030, 1004-0121 and 1004-0142. The information is being collected to permit the authorized officer to determine whether an applicant is qualified to hold a lease for exploration, development and utilization of leasable minerals other than coal and oil shale on the public lands. The information will be used to make this determination. A response is required to obtain a benefit.

PART 3500—LEASING OF SOLID MINERALS OTHER THAN COAL AND OIL SHALE

Subpart 3500—Leasing of Solid Minerals Other Than Coal and Oil Shale—General

Subpart 3501—Discriptions and Acreage

Subpart 3502—Qualification Requirements

Subpart 3503—Fees, Rentals and Royalties

Subpart 3504—Bonds

Subpart 3500—Leasing of Solid Minerals Other Than Coal and Oil Shale—General

§ 3500.0–3 Authorities.

The statutory authorities for the regulations in this group are as follows:

(a) *Leasable minerals.*—(1) *Public domain.* The Mineral Leasing Act of 1920, as amended and supplemented (30 U.S.C. 181–287), including the Act of February 7, 1927 (30 U.S.C. 281–287), the Act of April 17, 1926 (30 U.S.C. 271–276), and the Act of June 28, 1944 (58 Stat. 483–485), and the Federal Land Policy and Management Act of 1976 (43 U.S.C. 1701 et seq.).

(2) *Acquired lands.* The Mineral Leasing Act for Acquired Lands of 1947, as amended (30 U.S.C. 351–359) and the Federal Land Policy and Management Act of 1976 (43 U.S.C. 1701 et seq.).

(b) *Hardrock minerals.* (1) Section 402, Reorganization Plan No. 3 of 1946 (5 U.S.C. Appendix) transferred the functions of the Secretary of Agriculture relative to the leasing or other disposal of minerals to the Secretary of the Interior for lands acquired under the following statutes: (i) the Act of March 4, 1917 (16 U.S.C. 520); (ii) Title II of the National Industrial Recovery Act of June 16, 1933 (40 U.S.C. 401, 403(a) and 408); (iii) the 1935 Emergency Relief Appropriation Act of April 8, 1935 (49 Stat. 115, 118); (iv) section 55 of Title I of the Act of August 24, 1935 (49 Stat. 750, 781); (v) the Act of July 22, 1937 (50 Stat. 522, 525, 530), as amended July 28, 1942 (7 U.S.C. 1011(c) and 1018); and (vi) section 3 of the Act of June 28, 1952 (66 Stat. 285).

(2) Section 3 of the Act of September 1, 1949 (30 U.S.C. 192c) authorized the issuance of mineral leases or permits for the exploration, development and utilization of minerals, other than those covered by the Mineral Leasing Act for Acquired Lands, in certain lands added to the Shasta National Forest by the Act of March 19, 1948 (62 Stat. 83).

(3) The Act of June 30, 1950 (16 U.S.C. 508(b)) authorizes leasing of the hardrock minerals on National Forest lands in Minnesota.

(c) *Special acts.* (1) Gold and silver in confirmed private land grants are covered by the Act of June 8, 1926 (30 U.S.C. 291–293).

(2) Reserved minerals in lands patented to the State of California for parks or other purposes are covered by the Act of March 3, 1933 (47 Stat. 1487), as amended by the Act of June 5, 1936 (49 Stat. 1482) and the Act of June 29, 1936 (49 Stat. 2026).

(3) *National Park Service Areas.* Congress authorized mineral leasing, including the leasing of nonleaseable minerals in the manner prescribed by section 10 of the Act of August 4, 1939 (43 U.S.C. 387), in the following national recreation areas: (i) Lake Mead National Recreation Area—The Act of October 8, 1964 (16 U.S.C. 460n–3(b)); (ii) Whiskeytown Unit of the Whiskeytown-Shasta-Trinity National Recreation Area—The Act of November 8, 1965 (16 U.S.C. 460q–5); (iii) Ross Lake and Lake Chelan National Recreation Areas—The Act of October 2, 1968 (16 U.S.C. 90c–1(b)); (iv) Glen Canyon National Recreation Area—The Act of October 27, 1972 (16 U.S.C. 460dd et seq.).

(4) *Shasta-Trinity Units of the Whiskeytown-Shasta-Trinity National Recreation Area.* Section 6 of the Act of November 8, 1965, (16 U.S.C. 460q–5) authorizes mineral leasing, including the leasing of nonleasable minerals in the manner prescribed by section 3 of the Act of September 1, 1949, (30 U.S.C. 192c), on lands within the Shasta-Trinity Units of the Whiskeytown-Shasta-Trinity National Recreation Area.

(5) *White Mountains National Recreation Area.* Sections 403, 404, and 1312 of the Alaska National Interest Lands Conservation Act (16 U.S.C. 460mm–2 through 460mm–4) authorizes the Secretary of the Interior to permit the removal of the nonleasable minerals from lands or interests in lands within the recreation area in the manner described by section 10 of the Act of August 4, 1939, as amended (43 U.S.C. 387), and the removal of leasable minerals from lands or interest in lands within the recreation area in accordance with the mineral leasing laws.

(6) The Federal Land Policy and Management Act of 1976 (43 U.S.C. 1701 et seq.) authorizes the management and use of the public lands.

(7) The Independent Offices Appropriation Act (31 U.S.C. 9701) authorizes agencies to charge fees to recover the costs of providing services or things of value.

§ 3500.0–5 Definitions.

As used in Group 3500, the term:

(a) "Secretary" means the Secretary of the Interior.

(b) "Director" means the Director, Bureau of Land Management.

(c) "State Director" means an employee of the Bureau of Land Management who has been designated as the chief administrative officer of one of the Bureau's 12 administrative areas designated as "States".

(d) "Authorized officer" means any employee of the Bureau of Land Management who has been delegated the authority to perform the duties described in group 3500 of this title.

(e) "Proper BLM office" means the Bureau of Land Management office having jurisdiction over the lands subject to the regulations in group 3500 of this title (see 43 CFR subpart 1821).

(f) "Public domain lands" means lands, including mineral estates, which never left the ownership of the United States, lands which were obtained by the United States in exchange for public domain lands, lands which have reverted to the ownership of United States through the operation of the public land laws, and others specifically identified by Congress as part of the public domain.

(g) "Acquired lands" means lands, including mineral estates, which are not public domain lands and which the United States obtained through purchase, gift, or condemnation, and includes lands previously disposed of

under the public land laws including the mining laws.

(h) "Leasable minerals" means the chlorides, sulphates, carbonates, borates, silicates or nitrates of potassium or sodium and related products; sulphur in the States of Louisiana and New Mexico and on all acquired lands; phosphate, including associated and related minerals; asphalt in certain lands in Oklahoma; and gilsonite (including all vein-type solid hydrocarbons).

(i) "Valuable deposit" means a mineral occurrence where minerals have been found and the evidence is of such a character that a person of ordinary prudence would be justified in the further expenditure of his/her labor and means, with a reasonable prospect of success, in developing a valuable mine.

(j) "Chiefly valuable" means a valuable deposit where there is no significant conflict between the extraction of sodium, sulphur or potassium and any non-mineral disposition of lands. Where such extraction conflicts with other disposition, the lands shall be deemed chiefly valuable for sodium, sulphur or potassium extraction if the economic value of the lands for extraction of such minerals exceeds its economic value for any non-mineral disposition.

(k) "Act" means the Mineral Leasing Act of 1920, as amended and supplemented (30 U.S.C. 181 et seq.).

(l) "Service" means the Minerals Management Service.

(m) "Bureau" means the Bureau of Land Management.

(n) "Hardrock minerals" means those locatable minerals for which a mineral patent may be obtained under the Mining Law of 1872 and which are not leasable minerals or mineral materials salable under Group 3600 of this title. Hardrock minerals include, but are not limited to, copper, lead, zinc, magnesium, nickel, tungsten, gold, silver, bentonite, uranium, barite, feldspar and flourspar.

§ 3500.1 Nondiscrimination.

Any person acquiring a lease under Group 3500 shall comply fully with the equal opportunity provisions of Executive Order 11246 of September 24, 1965, as amended, and the regulations and relevant orders of the Secretary of Labor (41 CFR Chapter 60) and 43 CFR Part 17.

§ 3500.2 False statements.

Under the provisions of 18 U.S.C. 1001, it is a crime punishable by 5 years willfully to submit or cause to be submitted to any agency of the United States any false or fraudulent statement(s) as to any matter within the agency's jurisdiction.

§ 3500.3 Unlawful interests.

No member of, or delegate to, Congress, or Resident Commissioner, and no employee of the Department of the Interior, except as provided in part 20 of this title, shall be entitled to acquire or hold any Federal lease, or interest therein. (Officer, agent or employee of the Department—See 43 CFR Part 20; Member of Congress—See R.S. 3741; 41 U.S.C. 22; 18 U.S.C. 431–433)

§ 3500.4 Appeals.

Any party adversely affected by a decision of the authorized officer made pursuant to the provisions of Group 3500 of this title shall have a right of appeal pursuant to part 4 of this title.

§ 3500.5 Filing of documents.

(a) All necessary documents shall be filed in the proper BLM office. A document shall be considered filed when it is received in the proper BLM office.

(b) Documents and supporting information filed under this group shall be closed to inspection in accordance with the provisions of the Freedom of Information Act (5 U.S.C. 552).

§ 3500.6 Multiple development.

The granting of a permit or lease for the prospecting, development or production of deposits of any particular mineral shall not preclude the issuance of other permits or leases for the same lands for deposits of other minerals with suitable stipulations for simultaneous operation, or the allowance of applicable entries, locations or selections of leased lands with a reservation of the mineral deposits to the United States. Each permit or lease shall reserve the right to allow any other uses, or to allow disposal, of the leased lands that will not unreasonably interfere with the exploration and mining operations of the permittee or lessee and the permittee/lessee shall make all reasonable efforts to avoid interference with such authorized uses.

§ 3500.7 Environmental considerations.

Before a lease or permit is issued, the authorized officer or the appropriate surface management agency shall prepare the appropriate documentation required by the National Environmental Policy Act of 1969 (42 U.S.C. 4321, et seq.).

§ 3500.8 Lands not subject to leasing.

The following lands are not subject to leasing under the provisions of group 3500:

(a) Lands within national parks and monuments;

(b) Lands within Indian Reservations, except the Uintah and Ouray Indian Reservation, Mill Creek Extension, State of Utah;

(c) Lands within incorporated cities, towns and villages;

(d) Lands within naval petroleum and oil shale reserves and within the national petroleum reserves;

(e) Lands acquired by the United States for development of helium, fissionable material deposits or other minerals essential to the defense of the country, except that the lands may be leased for leasable minerals subject to leasing under the Act;

(f) Lands acquired by foreclosure or otherwise for resale;

(g) Acquired lands reported as surplus under the Federal Property and Administrative Services Act of 1949 (40 U.S.C. 471 et seq.); and

(h) Any tidelands or submerged coastal lands within the continental shelf or littoral to any part of lands within the jurisdiction of the United States.

§ 3500.9 Consent and consultation.

§ 3500.9–1 Federal lands adminstered by agencies outside of the Department of the Interior.

(a) Unless consent is required by law, public domain lands administered by an agency outside of the Department of the Interior shall only be leased after the Bureau of Land Management has consulted with the surface managing agency.

(b) Acquired lands shall only be leased with the written consent of the head or other appropriate official of the surface managing agency.

(c) An applicant may pursue the administrative remedies provided by a particular surface managing agency where such agency has required special stipulations in the lease or permit, or has refused consent to issuance of the lease or permit. If the applicant notifies the authorized officer within 30 days of receipt of the Bureau's decision that he/she has requested the surface managing agency to reconsider its decision, the time for filing an appeal under part 4 of this title is suspended until a decision is reached by such agency.

§ 3500.9–2 Ownership of surface overlying federally owned minerals by a State or charitable organization.

Where the United States has conveyed title to, or otherwise transferred the control of the surface of lands to any State or political subdivision, agency or instrumentality

thereof, or a college or any other educational corporation or association, or a charitable or religious corporation or association, such party shall be given written notification by certified mail of the application for permit or lease and shall be given a reasonable time, not to exceed 90 days, within which to suggest any lease stipulations deemed necessary for the protection of existing surface improvements or uses, to set forth the facts supporting the necessity of the stipulations or file any objections it may have to the issuance of the lease or permit. Where a party controlling the surface opposes the issuance of a lease or permit or wishes to place such restrictive stipulations, but the facts submitted in opposition to issuance or concerning the necessity for restrictive stipulations expressed by the party controlling the surface do not provide adequate basis for such action, the final decision as to whether to issue the lease or permit shall be based on a determination by the authorized officer as to whether or not the interests of the United States would best be served.

Subpart 3501—Descriptions and Acreage

§ 3501.1 Land descriptions.

§ 3501.1-1 Public domain.

Each application shall contain a complete and accurate description of the lands for which the lease or permit is desired. The lands applied for shall be in reasonably compact form.

(a) If the lands have been surveyed under the public land rectangular system, each application shall describe the lands by legal subdivision, section, township and range. Generally, a quarter-quarter section or a lot is the smallest legal subdivision for which an application may be made.

(b) When protracted surveys have been approved and the effective date thereof published in the **Federal Register**, all applications for lands shown on such approved protracted surveys shall describe the lands in the same manner as provided in paragraph (a) of this section for officially surveyed lands.

(c) If the lands have neither been surveyed on the ground nor shown on the records as protracted surveys, each application shall describe the lands by metes and bounds, giving courses and distances between the successive angle points on the boundary of the tract, in cardinal directions except where the boundaries of the lands are in irregular form, and connected by courses and distances to an official corner of the public land surveys.

(d) (1) On a noncompetitive lease, the survey for unsurveyed lands shall be at the expense of the applicant.

(2) On a competitive lease, the survey of unsurveyed lands shall be at the expense of the United States.

§ 3501.1-2 Acquired lands.

(a) (1) If the lands have been surveyed under the rectangular system of public land surveys, the description shall conform to that system and the lands shall be described by legal subdivision, section, township, and range. Generally, a quarter-quarter section or a lot is the smallest legal subdivision for which an application may be made.

(2) Where the description cannot conform to the public land surveys, any boundaries which do not so conform shall be described by metes and bounds, giving courses and distances between the successive angle points with appropriate ties to the nearest existing official survey corner. If not surveyed but within the area of the public land surveys, the lands shall be described by metes and bounds, giving courses and distances between the successive angle points on the boundary of the tract, and connected to a reasonably nearby official survey corner by courses and distances. Each application shall be accompanied by a map upon which the desired lands are clearly marked showing their location with respect to the administrative unit or project of which they are a part.

(b) If the lands have not been surveyed under the rectangular system of public land surveys, and the tract is not within the area of the public land surveys, it shall be described as in the deed or other document by which the United States acquired title to the lands or minerals. If the desired lands constitute less than the entire tract acquired by the United States, they shall be described by courses and distances between successive angle points on the boundary of the tract, tying by course and distance into the description in the deed or other document by which the United States acquired title to the lands. In addition, if the description in the deed or other document by which the United States acquired title to the lands does not include the courses and distances between the successive angle points on the boundary of the desired tract, the description in the application shall be expanded to include such courses and distances. Each application shall be accompanied by a map upon which the desired lands are clearly marked showing their location with respect to the administrative unit or project of which they are a part.

(c) If an acquisition tract number has been assigned by the acquiring agency to the identical tract desired, a description by such tract number shall be accepted in lieu of the description required in paragraphs (a)(2) and (b) of this section. However, such application shall be accompanied by the map required by paragraphs (a)(2) and (b) of this section.

§ 3501.1-3 Accreted lands.

Where an application includes any accreted lands that are not described in the deed to the United States, such accreted lands shall be described by metes and bounds, giving courses and distances between the successive angle points on the boundary of the tract, and connected by courses and distances to an angle point on the perimeter of the acquired tract to which the accretions belong.

§ 3501.2 Computing acreage holdings.

(a) In computing acreage holdings or control, the accountable acreage of a party owning any interest, either directly or indirectly, shall be such party's proportionate part of the total lease and permit acreage. Likewise, the accountable acreage of a party owning an interest in a corporation or association shall be such party's proportionate part of the corporation's or association's accountable acreage, except that no party shall be charged with its pro rata share of any acreage holdings of any association or corporation, unless it is the beneficial owner of more than 10 percent of the stock or other instruments of ownership or control of such association or corporation.

(b) The amount of acquired lands acreage for leasable minerals that may be held under lease or permit may not be in excess of the amount of public domain acreage for the same minerals permitted to be held under the Act. Public domain lease holdings shall not be charged against acquired lands lease holdings and vice versa; such respective holdings shall not be interchangeable.

(c) Where the United States owns only a fractional interest in the mineral resources of the lands involved, only that part of the total acreage involved in the lease which is proportionate to the ownership by the United States of the mineral resources therein shall be charged as acreage holdings. The acreage embraced in a future interest lease is not to be charged as acreage holdings until the lease for the future interest takes effect.

Subpart 3502—Qualification Requirements

§ 3502.1 Who may hold leases.

(a) Leases may be held only by citizens of the United States, associations (including partnerships and trusts) of such citizens, corporations organized under the laws of the United States or of any State or territory thereof and by municipalities. Citizens of a foreign country may only hold interest in leases or permits through stock ownership, stock holding or stock control.

(b) Citizens of a foreign country may only hold interests in leases and permits for leasable minerals if the laws, customs or regulations of their country do not deny similar or like privileges to citizens or corporations of the United States. A list of those countries denying similar or like privileges is available from any Bureau office.

(c) A mineral lease or permit shall not be issued to a minor. Leases or permits may be issued to a legal guardian or trustee of a minor.

§ 3502.2 Qualifications and holdings statements.

§ 3502.2-1 Filing of evidence.

Evidence of qualifications rquired by this section may be filed separately in the proper BLM Office. Thereafter, a reference by serial number to the record in which such evidence is filed, together with a statement as to any amendments, shall be acceptable in lieu of resubmitting the evidence with each application. It is the responsibility of applicants and lessees to assure that such evidence is current and accurate. An application referring to the serial number may be submitted only to the Bureau office where the evidence of qualifications is on file.

§ 3502.2-2 Individuals.

To qualify to hold a Federal prospecting permit, lease or license, an individual shall submit a signed statement showing:

(a) He/she is a U.S. citizen; and

(b) That his/her acreage holdings for the particular mineral concerned do not exceed the acreage holdings allowed for that mineral.

§ 3502.2-3 Associations, including partnerships and trusts.

(a) For an association, such as a partnership, to qualify to hold a prospecting permit, lease or exploration license, or any interest therein, a member or authorized attorney-in-fact shall submit the following:

(1) A signed statement setting forth: (i) The names, addresses, and citizenship of all members owning or controlling 10 percent or more of the association or partnership; (ii) the names of the members authorized to act on behalf of the association or partnership; (iii) that the association or partnership's acreage holdings for the particular mineral concerned do not exceed the acreage holdings for that mineral; and (iv) that the acreage holdings of any member owning more than 10 percent of the association or partnership do not exceed that allowed.

(2) A copy of the articles of the association or partnership.

(b) In order for a trust to hold prospecting permits or leases or any interest therein on behalf of a beneficiary, the guardian or trustee shall submit the following:

(1) A signed statement setting forth: (i) the citizenship of the beneficiary; (ii) the guardian or trustee's own citizenship; (iii) the grantor's citizenship, if the trust is revocable; and (iv) that the acreage holdings of the beneficiary, the guardian or trustee, or the grantor, if the trust is revocable, do not exceed that allowed.

(2) A copy of the court order or other document authorizing or creating the trust or guardianship.

§ 3502.2-4 Corporations.

For a corporation to qualify to hold a prospecting permit, lease, or exploration license, or any interest therein, an officer or authorized attorney-in-fact shall submit a signed statement setting forth:

(a) The State in which the corporation is incorporated;

(b) The names and citizenship of any stockholder owning or controlling more than 10 percent of the stock of the corporation;

(c) The names of the officers authorized to act on behalf of the corporation;

(d) That the corporation's acreage holdings, and those of any stockholding identified under paragraph (b) of this section, do not exceed that allowed; and

(e) The percentage of stock owned, held or controlled by citizens of a foreign country or persons with addresses outside the United States.

§ 3502.2-5 Heirs and devisees.

(a) If an applicant for a permit, an applicant for a preference right lease or a successful bidder to a competitive lease dies before the permit or lease is issued, the permit or lease shall be issued to the executor or administrator of the estate if probate of the estate has not been completed; if probate has been completed, or is not required, to the heirs or devisees; and if there are minor heirs or devisees, to their legal guardian or trustee in his/her name, provided there is filed in all cases the following information:

(1) Where probate of the estate has not been completed:

(i) Evidence that the person, who as executor or administrator submits forms of lease and bond, has authority to act in that capacity and to sign such forms;

(ii) Evidence that the heirs or devisees are the heirs or devisees of the decreased and are his/her only heirs or devisees; and

(iii) A statement over the signature of each heir or devisee concerning citizenship and holdings similar to that required by § 3502.2-1 of this title.

(2) Where the executor or administrator has been discharged or no probate proceedings are required:

(i) A certified copy of the will or decree of distribution, if any, and if not, a statement signed by the heirs that they are the only heirs and citing the provisions of the law of the deceased's last domicile showing that no probate is required; and

(ii) A statement over the signature of each of the heirs or devisees with reference to citizenship and holdings similar to that required by § 3502.2-1 of this title, except that if the heir or devisee is a minor, the statement shall be over the signature of the guardian or trustee.

(b) If a permittee or lessee dies, the executor or administrator of the estate shall be recognized as the record title holder of the permit or lease if probate has not been completed; and if probate has been completed, or is not required, the heirs or devisees shall be so recognized, provided that in all cases, the evidence required in paragraph (a) of this section has been filed.

§ 3502.2-6 Attorneys-in-fact.

An attorney-in-fact shall submit evidence of his/her authority to act on behalf of the applicant. The applicant shall submit a separate statement as to qualifications and acreage holdings unless the power of attorney specifically authorizes and empowers the attorney-in-fact to make or to execute such statements.

§ 3502.3 Other parties in interest.

If the applicant is not the sole party in interest to a permit or lease, he/she shall submit with his/her application the names of all other parties who hold or will hold any interest in the application or in the permit or lease, when issued. All interested parties shall furnish appropriate evidence of their qualifications to hold such permit or lease interest.

Subpart 3503—Fees, Rentals and Royalties

§ 3503.1 Payments.

§ 3503.1-1 Form of remittance.

All remittances shall be by U.S. currency, postal money order or negotiable instrument payable in U.S. currency and shall be made payable to the Department of the Interior—Bureau of Land Management or the Department of the Interior—Minerals Management Service, as appropriate. In the case of payments made to the Service, such payments may also be made by electronic funds transfer.

§ 3503.1-2 Where remitted.

(a)(1) All filing fees and all first-year rentals and bonuses for leases issued under Group 3500 of this title shall be paid to the proper BLM office.

(2) All second-year and subsequent rentals and all payments for leases shall be paid to the Service.

(b) All royalties on producing leases and all payments under leases in their minimum production period shall be paid to the Service.

§ 3503.2 Production royalties, minimum royalties and overriding royalties.

§ 3503.2-1 Production royalty rates.

Production royalty rates shall be set out in a separate schedule attached to and made a part of all leases and shall be determined on an individual case basis by the authorized officer prior to lease offering. For leases offered competitively, the rates shall be set out in the notice of lease sale. For leases issued noncompetitively, the schedule shall be sent to the prospective lessee for concurrence and signature prior to lease issuance.

§ 3503.2-2 Minimum production and royalty.

(a) Each lease shall be conditioned upon a minimum annual production beginning with the sixth lease year, except the authorized officer may allow in writing the payment of minimum royalty described in paragraph (b) of this section in lieu of production for any particular lease year. Minimum royalty payments shall be credited to production royalties for that year.

(b) Leases issued, renewed or readjusted on or after the effective date of these regulations shall establish a minimum royalty of $3 per acre or fraction thereof per year payable in advance.

(c) Leases renewed or readjusted after the effective date of these regulations shall require a minimum annual production as described in paragraph (a) of this section beginning with the first full year after the date of the renewal or readjustment. Hardrock mineral leases or development or operating agreements which are subject to escalating rentals are exempt from these minimum production and royalty requirements.

§ 3503.2-3 Limitation of overriding royalties.

(a) An overriding royalty interest may be created by assignment or otherwise; provided, however, that if the total of the overriding royalty interest at any time exceeds 1 percent of the gross value of the output at the point at which royalty is assessed, it shall be subject to reduction or suspension by the authorized officer to a total of not less than 1 percent of such gross value, whenever, in the interest of conservation, it appears necessary to do so in order to: (1) prevent premature abandonment; or (2) make possible the economic mining of marginal or low grade deposits. Where there is more than 1 overriding royalty interest, any such suspension or reduction shall be applied to the respective interests in the manner agreed upon by the holders thereof or, in the absence of such agreement, in the inverse order of the dates of creation of such interests.

(b) Any assignment, sublease, or other transfer or agreement which creates an overriding royalty interest shall not be approved unless the owner of that interest files his/her agreement in writing that such interest is subject to suspension or reduction as provided in paragraph (a) of this section. No overriding royalties shall be paid at a rate in excess of the rate to which they have been so reduced until otherwise authorized by the authorized officer.

(c) Where an interest in a phosphate lease, permit, or operating agreement is assigned, the assignor may retain an overriding royalty interest in excess of the above limitation if he/she shows to the satisfaction of the authorized officer that he/she has made substantial investments for improvements on the lands covered by the assignment.

§ 3503.2-4 Waiver, suspension, or reduction of rental, minimum royalty or royalties.

(a) In order to encourage the greatest ultimate recovery of the leased minerals, and in the interest of conservation, whenever the authorized officer determines it is necessary to promote development or finds that leases cannot be successfully operated under the terms provided therein, the rental or minimum royalty payments may be waived, suspended or reduced, or the rate of royalty reduced.

(b) An application for any of the above benefits shall be filed in duplicate in the proper BLM office. The application shall contain the serial number of the lease, the name of the record title holder, the operator or sublessee and a description of the lands by legal subdivision in addition to the following information:

(1) Each application shall show the number and location of each mine, a map showing the extent of the mining operations, a tabulated statement of the minerals mined and subject to royalty for each month covering a period of not less than 12 months immediately preceding the date of filing of the application, and the average production per day mined for each month and complete information as to why the minimum production was not attained.

(2) Each application shall contain a detailed statement of expenses and costs of operating the entire lease, the income from the sale of any leased products and all facts showing whether the mines can be successfully operated under the royalty or rental fixed in the lease. Where the application is for a reduction in royalty, full information shall be furnished as to whether royalties or payments out of production are paid to anyone other than the United States, the amounts so paid and efforts made to reduce them.

(3) The applicant shall also file agreements of the holders of the lease and of the royalty holders to a permanent reduction of all other royalties from the leasehold to aggregate not in excess of one-half the royalties paid to the United States.

§ 3503.3 Suspensions.

§ 3503.3-1 Suspension of operations and production.

(a) The authorized officer may, in the interest of conservation, order or agree to a suspension of operations and production.

(b) Applications by lessees for suspensions of operations and production shall be filed in duplicate in the proper BLM office and shall set forth why it is in the interest of conservation to suspend operations and production.

(c) The term of any lease shall be extended by adding thereto any period of suspension of operations and production during such term.

(d) A suspension shall take effect as of the date specified by the authorized officer. Rental and minimum annual production shall be suspended during any period of suspension of operations and production beginning with the first day of the lease month on which the

suspension of operations and production becomes effective, or, if the suspension of operations and production becomes effective on any date other than the first day of a lease month, beginning with the first day of the lease month following such effective date. The suspension of rental and minimum annual production shall end on the first day of the lease month in which operations or production is resumed, or upon expiration of the suspension, whichever occurs first. Where rentals are creditable against royalties and have been paid in advance, proper credit shall be allowed on the next rental or royalty due under the lease.

(e) The minimum annual production requirements of a lease shall be proportionately reduced for that portion of a lease year for which a suspension of operations and production is directed or granted by the authorized officer.

§ 3503.3-2 Suspension of operations.

(a) The authorized officer may suspend operations on a lease issued under the regulations in group 3500 of this title when marketing conditions are such that leases cannot be operated except at a loss.

(b) Application for suspension shall be submitted in duplicate to the proper BLM office and shall contain sufficient information to establish that the lease cannot be operated except at a loss.

(c) A suspension of operations does not affect the term of the lease or the annual rental payment.

(d) A suspension shall take effect as of the date specified by the authorized officer. Minimum annual production shall be suspended during any period of suspension of operations beginning with the first day of the lease month on which the suspension becomes effective, or, if the suspension becomes effective on any date other than the first day of a lease month, beginning with the first day of the lease month following such effective date. The suspension of minimum annual production shall end on the first day of the lease month in which operations are resumed, or upon expiration of the suspension, whichever occurs first.

(e) The minimum annual production requirements of a lease shall be proportionately reduced for that portion of a lease year for which a suspension of operations is granted by the authorized officer.

Subpart 3504—Bonds

§ 3504.1 Bonding requirements.

§ 3504.1-1 When filed.

Prior to the issuance of a permit or lease, the applicant shall be required to submit a surety or personal bond as described in this subpart.

§ 3504.1-2 Where filed.

All bonds shall be filed in the proper BLM office on an approved form. A single copy executed by the principal or, in the case of surety bonds, by both the principal and an acceptable surety is sufficient. Nationwide bonds may be filed in any Bureau office.

§ 3504.1-3 Surety bonds and personal bonds.

(a) Only those surety bonds issued by qualified surety companies approved by the Department of the Treasury shall be accepted. (See Department of the Treasury Circular No. 570, any supplemental circulars or any replacements).

(b) Personal bonds shall be accompanied by: (1) cash; (2) cashier's check; (3) certified check; or (4) negotiable U.S. Treasury bonds of a value equal to the amount specified in the bond. Negotiable Treasury bonds shall be accompanied by a proper conveyance to the Secretary of full authority to sell such securities in case of default in the performance of the terms and conditions of the lease or permit.

§ 3504.1-4 Amount of bond.

(a) The bond amounts shall be established on a case by case basis by the authorized officer. Minimum bonding requirements are set forth in the pertinent regulations for specific minerals.

(b) The authorized officer may elect to increase the amount of any bond to be issued or any outstanding bond when additional coverage is determined appropriate.

§ 3504.1-5 Statewide and nationwide bonds.

(a) In lieu of separate bonds for each lease or permit, a lessee or permittee may furnish a bond in an amount of not less than $25,000, as determined by the authorized officer, to cover all leases and permits for a specific mineral in any 1 State.

(b) In lieu of separate bonds for each lease or permit, a lessee or permittee may furnish a bond in the amount of not less than $150,000, as determined by the authorized officer, to cover all leases and permits for a specific mineral nationwide.

§ 3504.2 Default.

(a) Where, upon a default, the surety makes a payment to the United States of an obligation incurred under a lease, the face amount of the surety bond or personal bond and the surety's liability thereunder shall be reduced by the amount of such payment.

(b) After default, upon penalty of cancellation of all of the leases or permits covered by such bond, the principal shall within 6 months after notice, or within such shorter period as may be fixed by the authorized officer, either post a new bond or increase the existing bond to the amount previously held. In lieu thereof, the principal may within that time file separate or substitute bonds for each lease or permit.

§ 3504.3 Termination of period of liability.

The authorized officer shall not give consent to termination of the period of liability of any bond unless an acceptable alternative bond has been filed or until all the terms and conditions of the lease or permit have been met.

Subpart 3506—Assignments and Subleases

§ 3506.1 Permits and leases subject to assignment or sublease.

Any propsecting permit or lease may be assigned in whole or in part to any person, association, or corporation qualified to hold such lease or permit.

§ 3506.2 Filing fees.

To be accepted for filing, each instrument of assignment of record title, operating rights and overriding royalty assignments shall be accompanied by a nonrefundable filing fee of $25. Any instrument not accompanied by the filing fee shall not be accepted.

§ 3506.3 Filing requirements.

§ 3506.3-1 Record title assignments.

(a) A separate instrument of assignment shall be filed in triplicate for each permit or lease. The instrument shall be filed within 90 days of final execution and shall contain:

(1) Name and current address of assignee;

(2) Interest held assignor and interest to be assigned;

(3) Description of the lands to be assigned as described in the permit or lease;

(4) Percentage of overriding royalties retained; and

(5) Date and signature of assignor.

(b) The assignee shall provide a single copy of the request for approval of assignment which shall contain:

(1) Statement of qualifications and holdings as required by subpart 3502 of this title;

(2) Date and signature of assignee; and

(3) Filing fee as required by § 3506.2 of this title;

(c) The approval of an assignment of all interests in a specific portion of the lands in a lease shall create a separate lease which shall be given a current serial number.

§ 3506.3-2 Operating rights.

One copy of an operating rights assignment shall be filed within 90 days from the date of final execution and shall contain the operating agreement between the lessee and operator. The assignee shall file a request for approval as described in § 3506.3-1(b) of this title. The agreement shall be approved by formal decision.

§ 3506.3-3 Overriding royalty interests.

In order to verify the holdings of the assignee, all overriding royalty interest assignments shall be filed for record purposes within 90 days from the date of execution, but no formal approval shall be given. Any such assignment shall be deemed to be valid provided it is accompanied by the assignee's statement of qualifications as provided for in subpart 3502 of this title.

§ 3506.4 Permit or lease account status.

The authorized officer shall not approve an assignment of a permit or lease unless the account under the permit or lease is in good standing.

§ 3506.5 Bonds.

§ 3506.5-1 Coverage.

If the permittee or lessee has been required to maintain a bond, then prior to approval of the assignment, the assignee shall be required to furnish a new bond in the same amount, or, in lieu thereof, consent of the surety on the present bond to the substitution of the assignee as principal. (See Subpart 3504)

§ 3506.5-2 Continuing responsibility.

The assignor and his/her surety shall continue to be responsible for the performance of any obligation under the permit or lease until the effective date of the approval of the assignment. If the assignment is not approved, the assignor's obligation to the United States shall continue as though no such assignment had been filed for approval. After the effective date of approval the assignee, including sublessee, and his/her surety shall be responsible for the performance of all permit or lease obligations notwithstanding any terms in the assignment to the contrary.

§ 3506.6 Effective date.

An assignment shall take effect the first day of the month following its final approval by the Bureau, or if the assignee requests, the first day of the month of the approval.

§ 3506.7 Extensions.

The approval of an assignment shall not extend the life of the permit or the readjustment or renewal periods of the lease.

Subpart 3507—Fractional and Future Interest Permits and Leases

§ 3507.1 Issuance of prospecting permits and leases.

§ 3507.1-1 Prospecting permits.

A prospecting permit for a present fractional interest in mineral deposits acquired by the United States may be issued by the authorized officer.

§ 3507.1-2 Leases.

Subject to the provisions of section 3 of the Mineral Leasing Act for Acquired Lands (30 U.S.C. 353), noncompetitive leases for future or fractional interests in lands believed, but not known, to contain mineral deposits, may be issued by the authorized officer whenever he/she finds it to be in the public interest.

§ 3507.2 Forms and applications.

No specific application form is required, but the application shall contain the same information required of an applicant for the specific mineral concerned.

§ 3507.3 Terms and conditions.

Permit and lease terms and conditions shall be established on an individual case basis.

§ 3507.4 Consent of agency or bureau.

A prospecting permit for a present fractional interest in mineral deposits, or a lease for a fractional or future interest in mineral deposits acquired by the United States, may be issued by the authorized officer only with the consent of the surface management agency.

§ 3507.5 Where filed and filing fee.

The application shall be filed in triplicate in the proper BLM office and shall be accompanied by a nonrefundable filing fee of $25.

§ 3507.6 Qualifications.

Compliance with Subpart 3502 of this title is required.

§ 3507.7 Evidence of ownership.

§ 3507.7-1 Present fractional interest.

An applicant for a present fractional interest permit or lease shall have a present interest in the minerals. If the applicant does not own all of the mineral interests not owned by the United States or all of the operating rights therein, the application shall show the extent of the applicant's rights and the names of the other owners of such rights.

§ 3507.7-2 Future interest.

An application for a whole or fractional future interest prospecting permit or lease shall include evidence of title to the present interest in the mineral deposit, which may be in the form of a certified abstract of title or certificate of title. If the applicant is the owner of the operating rights to the non-federal minerals and acquired such rights under a lease or contract with the owner of such minerals, the application shall be accompanied by 3 copies of such lease or contract. A whole or fractional future interest lease shall be issued only to an applicant who owns all or substantially all of the present operating rights to the non-federal minerals as fee owner, lessee or operator holding such rights.

§ 3507.8 Effective date of future interest leases.

Furture interest leases shall become effective on the date of vesting of title to the minerals in the United States as stated in the lease.

§ 3507.9 Rejection of application.

(a) An application for a future interest lease filed less than 1 year prior to the date of the vesting in the United States of the present interest in the minerals shall be rejected. Upon the vesting in the United States of the present possessory interest in the minerals, all applications for future interest leases outstanding at the time shall automatically lapse and thereafter only applications for a present interest lease shall be considered.

(b) Unless the authorized officer determines it to be in the public interest to do otherwise, a lease or prospecting permit shall not issue to one who, with the Federal interest applied for, would control less than 50 percent of the operating rights, and the application for such a lease or permit shall be rejected.

Subpart 3508—Mineral Lease Exchange

§ 3508.0-1 Purpose.

This subpart permits a mineral prospecting permittee, or mineral lessee, to relinquish the lease to be acquired under preference right, or an existing mineral lease, in exchange for a mineral lease of other lands of comparable value for any leasable or hardrock mineral when the Secretary concludes that operations on the preference right or outstanding lease would not be in the public interest, and that operations on

the lands leased in exchange would be in the public interest.

§ 3508.0-7 Scope.

(a) The regulations in this subpart and Subpart 3435 of this title, which cover provisions related to exchanges involving the issuance of coal leases, coal lease bidding rights or coal lease modifications, may be used in exchanges of one mineral for another.

(b) In the case of a conflict between this subpart and the provisions of Subpart 3435 of this title, the provisions governing the lease or lease interest to be issued shall control.

§ 3508.1 When exchange provisions apply.

(a) The provisions of this subpart shall be invoked by the authorized officer notifying the preference right lease applicant or lessee that he/she is prepared to consider exchange of a mineral lease for relinquishment of leasing rights on the lands described in the notice.

(b) The authorized officer may seek the exchange of any part or all of the lands under preference right lease application or lease. More than 1 preference right lease application or lease may be considered. The effect of a partial or multiple exchange shall be taken into account by the authorized officer in determining whether such an exchange is in the public interest.

(c) An exchange mineral lease shall not be issued unless the authorized officer finds, after completing the procedures in this subpart, that the exchange is in the public interest.

(d) For the purposes of this subpart, an exchange shall be considered in the public interest if the authorized officer finds that the benefits of production from the lease or preference right lease would not outweigh the adverse effects, or threat of damage or destruction to agricultural production potential, or scenic, biological, geologic, historic or other public interest values from lease operations. In exercising his/her discretion to exchange mineral leasing values in the public interest, the authorized officer shall consider, but is not limited to consideration of, these elements of the public interest: recreational use; archeological or historic values; threatened or endangered species; proximity of residential or urban areas; study for potential inclusion in the wilderness or wild and scenic rivers systems; and value for public uses, including public highways, airports and rights-of-way.

§ 3508.2 Exchange procedures.

(a) The authorized officer shall notify the preference right lease applicant or lessee when he/she is prepared to consider an exchange or other mineral leasing values for a tract under lease application or lease. The exchange notice shall:

(1) State why the authorized officer believes an exchange would be in the public interest;

(2) Provide that the lease applicant or lessee shall respond by indicating whether he/she is willing to negotiate for an exchange under this subpart; and

(3) Contain a description of the lands for which the authorized officer would offer exchange terms. The preference right lease applicant's or lessee's reply may describe the lands on which the lease applicant or lessee would accept an exchange lease.

(b) A preference right lease applicant shall show the timely submittal of a mineral preference right lease application.

(c) If the preference right lease applicant demonstrates to the Secretary that the applicant has a preference right to a lease, the authorized officer may, in lieu of issuing a lease on the preference right, negotiate for the selection of appropriate exchange lands and establish lease terms on the lands to be leased in exchange.

(d)(1) The lands leased in exchange shall, to the satisfaction of the preference right lease applicant or lessee and the authorized officer, be a lease tract containing a deposit of leasable or hardrock minerals of comparable value. A lease tract shall be determined "of comparable value" for exchange purposes when the authorized officer concludes that the value of the more valuable tract is less than 10 percent greater than the value of the less valuable tract.

(2) The lands covered by an exchange lease shall be subject to leasing under the authorities contained in § 3500.0-3 of this title.

(e) The exchange right shall be equal to the fair market value of the preference right or lease to be relinquished. A reply to the authorized officer's notice by the preference right lease applicant or lessee which indicates a willingness to consider an exchange also shall indicate a willingness to provide geologic and economic data to enable the authorized officer to determine the fair market value of the relinquished preference right or lease.

(f) After the prospective exchange lessee and the authorized officer agree on the lands to be leased in exchange, a notice of the proposed exchange shall be published in the **Federal Register** and in a newspaper(s) in the county(s) where both the preference right or lease lands and the proposed exchange lease lands are located. The notice shall include:

(1) The time and place of a public hearing(s);

(2) The authorized officer's preliminary findings that the exchange is in the public interest; and

(3) A request for public comments on the merits of the proposed exchange.

§ 3508.3 Issuance of lease.

(a) If, after public hearing, the authorized officer determines by written decision that issuance of the exchange lease is in the public interest, he/she shall establish stipulations for operations on the exchange lease.

(b) The exchange lease shall be subject to the relevant provisions of group 3500 and standard lease terms thereunder and shall contain:

(1) A recital that the lessee quitclaims and relinquishes any right or interest in the preference right lease application or lease exchanged; and

(2) A recital of the authorized officer's finding that the lease issuance is in the public interest.

Subpart 3509—Relinquishment, Termination, Expiration, and Cancellation

§ 3509.1 Relinquishment.

§ 3509.1-1 Prospecting permits.

The permittee may relinquish the entire prospecting permit or any legal subdivision thereof. A partial relinquishment shall clearly describe the lands surrendered and give the exact acreage relinquished. A relinquishment shall be filed in the proper BLM office. Upon its acceptance by the authorized officer, the relinquishment shall be effective as of the date it is filed. Such lands, if otherwise available, shall become available for the filing of new applications immediately upon notation on the official status records.

§ 3509.1-2 Leases.

Upon a satisfactory showing that the public interest will not be impaired, the lessee may relinquish the entire lease or any legal subdivision thereof. A partial relinquishment shall clearly describe the lands surrendered and the exact area thereof. A relinquishment shall be filed in the proper BLM office. Upon its acceptance by the authorized officer, the relinquishment shall be effective as of the date it is filed, subject to the continued obligation of the lessee and his/her surety to make payment of all accrued rentals and royalties and to provide for the preservation of any mines or productive works or permanent improvements on the leased lands in

accordance with the regulations and terms of the lease.

§ 3509.2 Termination of prospecting permits.

A prospecting permit shall automatically terminate for failure to pay rental on or before the anniversary date of the permit. The termination of the permit for failure to pay rental shall be noted on the official records of the proper BLM office. Until such notation is made, the lands covered by the permit shall not be available for filing of any other permit applications. Applications for such permits filed prior to such notation shall be rejected.

§ 3509.3 Expiration.

§ 3509.3-1 Prospecting permits.

The permit shall expire at the end of its initial or extended term, as applicable, without notice to the permittee. Upon expiration, the lands, if otherwise available and if no preference right lease application has been filed by the prior permit holder, shall be subject to filing of new applications for prospecting permits 60 days thereafter.

§ 3509.3-2 Leases.

(a) Hardrock, sodium, sulphur and asphalt leases shall expire either at the end of the lease term, if a timely application for lease renewal is not timely filed in accordance with applicable regulations, or at the time a timely application for renewal is rejected.

(b) Potassium, phosphate and gilsonite leases continue for so long as the lessee complies with the lease terms and conditions which are subject to periodic readjustment in accordance with applicable regulations.

§ 3509.4 Cancellation.

§ 3509.4-1 Prospecting permits.

Except as provided for in § 3509.2 of this title, if a permittee fails to comply with the provisions of the law or the regulations issued thereunder, or defaults with respect to any of the terms or stipulations of the permit and such failure or default continues for 30 days after service of written notice thereof by the authorized officer, the permit may be cancelled. A waiver of any particular cause for cancellation shall not prevent the cancellation of the permit for any other cause, or for the same cause occurring at any other time.

§ 3509.4-2 Leases.

(a) If the lessee fails to comply with the provisions of the Act, or of the general regulations promulgated and in force on the date of the lease, or at the effective date of any readjustment of the terms and conditions thereof, or defaults in the performance or observance of any of the terms, covenants, and stipulations of the lease and such failure or default continues for 30 days after service of written notice thereof by the lessor, then the lessor may institute appropriate proceedings in a court of competent jurisdiction for the forfeiture and cancellation of the lease as provided in section 31 of the Act. A waiver of any particular cause of forfeiture shall not prevent the cancellation and forfeiture of the lease for any other cause of forfeiture, or for the same cause occurring at any other time.

(b) If any interest in any lease is owned or controlled directly or indirectly in violation of any of the provisions of the Act, the authorized officer shall give the lessee 30 days to remedy the violation or to show cause why the Attorney General should not be requested to institute proceedings in a court of competent jurisdiction to:

(1) Cancel the lease;

(2) Forfeit the interest so owned; or

(3) Compel disposal of the interest so owned or controlled.

§ 3509.4-3 Bona fide purchasers.

(a) A lease or interest therein shall not be cancelled to the extent that such action adversely affects the title or interest of a bona fide purchaser even though such lease or interest, when held by a predecessor in title, may have been subject to cancellation. All purchasers shall be charged with constructive notice as to all pertinent regulations and all Bureau records pertaining to the lease and the lands covered by the lease. No party shall be eligible for status as a bona fide purchaser if the Bureau has not approved the assignment under which the party acquired an interest in the lease.

(b) Prompt action shall be taken to dismiss, as a party to any proceedings with respect to a violation by a predecessor of any provisions of the Act, any person who shows the holding of an interest as a bona fide purchaser without having violated any provisions of the Act. No hearing shall be necessary upon such showing unless prima facie evidence is presented that the purchaser is not a bona fide purchaser. If, during any such proceeding, a party thereto files a waiver of his/her rights under the lease to drill or to assign his/her lease interests, or if such rights are suspended by order of the Secretary pending a decision, payments or rentals and the running of time against the term of the lease involved shall be suspended as of the first day of the month following the filing of the waiver or of the Secretary's suspension until the first day of the month following the final decision in the proceeding or the revocation of the waiver for suspension.

PART 3510—PHOSPHATE

Subpart 3510—Phosphate Leasing—General

Subpart 3511—Lease Terms and Conditions

Subpart 3512—Phosphate Prospecting Permits

Subpart 3513—Preference Right Lease

Subpart 3514—Exploration License

Subpart 3510—Phosphate Leasing—General

§ 3510.0-3 Authorities.

Authorities for leasing phosphate are shown under § 3500.0-3 of this title.

§ 3510.1 Leasing procedures.

The regulations in this part provide the procedures for qualified entities to obtain rights to develop deposits of phosphate, including associated and related minerals, found on lands available for leasing. The regulations provide for this in the following manner:

(a) "Prospecting permits" allow the permittee to explore for deposits of phosphate.

(b) "Preference right leases" are issued to holders of prospecting permits who demonstrate the discovery of a valuable deposit of phosphate under the permit.

(c) "Exploration licenses" allow the licensee to explore known deposits of phosphate to obtain data but do not grant the licensee any preference or other right to a lease.

(d) "Competitive leases" are issued for known deposits of phosphate and allow the lessee to mine the deposit.

(e) "Fringe acreage leases" are issued noncompetitively for known deposits of phosphate adjacent to existing mines on non-Federal lands which can only be mined as part of the existing mining operation.

(f) "Lease modifications" are used to add known deposits of phosphate to an adjacent Federal lease which contains an existing mine provided the deposits can only be mined as part of the existing mining operation.

§ 3510.2 Other applicable regulations.

§ 3510.2-1 General leasing regulations.

Part 3500 of this title contains the general regulations governing the leasing of solid minerals other than coal and oil shale and supplements, as applicable, the regulations in this part. The Part 3500 regulations include, but are not limited to, such matters as multiple mineral development, environmental review, other agency consent and consultation, and lands not available for leasing. Cross-reference to specific regulations in part 3500 is provided in this part as an aid to the reader and is not intended to limit the applicability of Part 3500 only to the cross-referenced regulations.

§ 3510.2-2 Special areas.

Part 3570 of this title contains regulations specific to certain national recreation areas and to certain lands patented to the State of California, and as applicable, supplements this part. Except where specific regulations in Part 3570 are applicable, the regulations in this part and Part 3500 shall govern the leasing of phosphate in those national recreation areas and those patented lands.

§ 3510.3 Allowable acreage holdings.

No person, company, association or corporation may hold at any particular time, directly or indirectly, more than 20,480 acres under prospecting permit and lease in the United States.

Subpart 3511—Lease Terms and Conditions

§ 3511.1 Applicability of lease terms and conditions.

The lease terms and conditions set out under this section apply to all leases issued or readjusted under Part 3510 of this title. Each lease shall be issued on a form approved by the Director and shall be dated as of the first day of the month after its approval by the authorized officer unless the applicant requests in writing that it be dated the first day of the month in which it is approved. Each lease shall authorize in accordance with its terms and conditions the mining of phosphate, phosphate rock and associated or related minerals.

§ 3511.2 Rental and royalty.

§ 3511.2-1 Rental.

(a) Each lease shall provide for the payment of rental annually and in advance for each acre or fraction thereof during the continuance of the lease at the rate of not less than 25 cents for the first lease year, 50 cents for the second and third lease years, and $1 for each and every year thereafter. The annual rental payment shall not be less than $20. The rental paid for any year shall be credited against the first royalties as they accrue under the lease during the year for which rental was paid.

(b) If the annual rental is not timely remitted, the lessee shall be notified by the authorized officer that, unless payment is made within 30 days from receipt of such notification, action shall be taken to cancel the lease. (See § 3509.4-2)

(c) Remittances of rental shall be made in accordance with § 3503.1 of this title.

§ 3511.2-2 Production royalty.

All leases shall be conditioned upon the payment to the United States of such royalties as may be specified in the lease, which shall be fixed by the authorized officer in advance as provided under § 3503.2-1 of this title but not less than 5 per centum of the gross value of the output of phosphates or phosphate rock and associated or related minerals.

§ 3511.3 Duration of lease.

The lease shall be issued for an indeterminate period subject to the Secretary's right of reasonable readjustment of lease terms and conditions at the end of each 20-year period.

§ 3511.4 Readjustment.

The terms and conditions of a lease are subject to reasonable readjustment at the end of each 20-year period following the effective date of the lease unless otherwise provided by law at the time of expiration of such periods. Prior to the expiration of each 20-year period, the lessee shall be notified by the authorized officer at least 2 years prior to the expiration date of the lease as to whether the lease terms and conditions are to be readjusted. If the authorized officer fails to so notify the lessee, or if the proposed readjusted terms and conditions are not transmitted to the lessee before the end of the 2-year period prior to the 20-year anniversary date, the right to readjust the lease shall have been waived until the expiration of the next 20-year term. The lessee is

deemed to have agreed to the readjusted terms and conditions unless, within 60 days after receiving them, the lessee files an objection thereto, or relinquishes the lease. If objections are filed timely, but a mutual agreement between the lessee and the authorized officer cannot be reached, the authorized officer shall issue a formal decision of readjustment which the lessee may appeal in accordance with part 4 of this title.

§ 3511.5 Use of other minerals.

Any phosphate lease issued pursuant to this subpart shall provide that the lessee may use deposits of silica, limestone or other rock on the leased lands in the processing or refining of the phosphates, phosphate rock and associated or related minerals mined from the leased lands upon payment of royalty as set forth in the royalty schedule attached to the lease.

§ 3511.6 Bonds.

Prior to issuance of a lease, the applicant shall furnish a bond in an amount to be determined by the authorized officer, but not less than $5,000. (See Subpart 3504)

§ 3511.7 Special stipulations.

To insure adequate utilization and protection of the lands and their resources, leases shall contain such stipulations as may be prescribed by the authorized officer or the responsible official of the surface management agency if the surface is not under Bureau jurisdiction as described in § 3500.9 of this title. (See also Part 3570)

§ 3511.8 Other applicable regulations.

Leases issued under this part shall also be subject to the conditions set forth in other regulations, including, but not limited to, the following:

(a) Minimum annual production and minimum royalty are covered by § 3503.2–2 of this title.

(b) Suspension of operations and production and suspension of operations are covered by § 3503.3 of this title.

(c) Assignments and subleases are covered by subpart 3506 of this title.

(d) Cancellation and relinquishment are covered by subpart 3509 of this title.

(e) Exploration and mining are covered by Part 3580 of this title.

(f) Royalty management is covered by 30 CFR Chapter II, Subchapter A.

Subpart 3512—Phosphate Prospecting Permits

§ 3512.1 Areas subject to prospecting.

A prospecting permit may be issued for any unclaimed, undeveloped area of open and available Federal lands subject to leasing where prospecting or exploratory work is necessary to determine the existence or workability of phosphate. Discovery of a valuable deposit of phosphate within the terms of the permit entitles the permittee to a preference right lease.

§ 3512.2 Rights conferred by issuance of prospecting permits.

A permit shall grant the permittee the exclusive right to prospect on and explore the lands to determine the existence of a valuable deposit of phosphate in accordance with the terms and conditions of the permit. The permittee may remove only such material as is necessary to demonstrate the existence of a valuable mineral deposit.

§ 3512.3 Application for prospecting permit.

§ 3512.3–1 Filing requirements.

(a) An application shall be filed on a form approved by the Director or an exact reproduction of such form.

(b) An application shall be filed in triplicate with the proper BLM office.

(c) The application shall be accompanied by a nonrefundable filing fee of $25, and rental for the first year at the rate of 50 cents per acre, or fraction thereof made payable to the Department of the Interior—Bureau of Land Management. The rental payment shall be for the total acreage if known, and if not known, for the total acreage computed on the basis of 40 acres for each smallest subdivision. The rental payment shall not be less than $20.

§ 3512.3–2 Contents of applications.

Each application shall be typewritten, or printed plainly in ink; manually signed in ink and dated by the applicant or applicant's duly authorized attorney-in-fact, and shall contain the following:

(a) The name and address of the applicant;

(b) A statement of the applicant's qualifications and holdings. (See Subpart 3502); and

(c) A complete and accurate land description in compliance with subpart 3501 of this title. The application shall not include more than 2,560 acres in a reasonably compact form.

§ 3512.3–3 Exploration plans.

An exploration plan in triplicate, reasonably designed to determine the existence and workability of the deposit, shall accompany the application and shall include the following:

(a) The names, addresses and telephone numbers of persons responsible for operations under the plan and to whom notices and orders are to be delivered;

(b) A brief description, including maps, of geologic, water, vegetation and other physical factors, and the distribution, abundance and habitat of fish and wildlife, particularly threatened and endangered species, that may be affected by the proposed operation within the area where exploration is to be conducted, and the present land use within and adjacent to the area;

(c) A narrative description showing:

(1) The method of exploration and types of equipment to be used;

(2) The measures to be taken to prevent or control fire, soil erosion, pollution of surface and ground water, pollution of air, damage to fish and wildlife or their habitat and other natural resources and hazards to public health and safety, including specific actions necessary to meet all applicable laws and regulations;

(3) The method for plugging drill holes; and

(4) The measures to be taken for surface reclamation, which shall include as appropriate:

(i) A reclamation schedule;

(ii) The method of grading, backfilling, soil stabilization, compacting and contouring;

(iii) The method of soil preparation and fertilizer application;

(iv) The type and mixture of shrubs, trees, grasses, forbs or other vegetation to be planted; and

(v) The method of planting, including approximate quantity and spacing.

(d) The estimated timetable for each phase of the work and for final completion of the program;

(e) Suitable topographic maps or aerial photographs showing existing bodies of surface water, topographic, cultural and drainage features, and the proposed location of drill holes, trenches and roads; and

(f) Such other data as may be required by the authorized officer.

§ 3512.3–4 Rejection of application.

Any application for a prospecting permit which does not comply with the requirements of this subpart shall be rejected. If the applicant files a new application for the same lands within 30 days of receipt of the rejection, the nonrefundable filing fee and rental payment submitted with the original application shall be applied to the new application, provided the serial number of the original application is shown on the new application. If a new application is not filed within the 30-day period, the advance rental shall be refunded. Priority for the permit shall be

established as of the date the corrected application is filed.

§ 3512.4 Determination of priorities.

§ 3512.4-1 Regular filings.

Priority of application shall be determined in accordance with the time of filing.

§ 3512.4-2 Simultaneous filings.

Where more than 1 application is filed at the same time for the same lands, priority shall be determined in accordance with Subpart 1821 of this title.

§ 3512.5 Amendment to application.

An amendment to an application for a prospecting permit to include additional lands shall receive priority for such additional lands from the date of the filing of the amended application. The amended application shall be accompanied by the required advance rental. No additional filing fees are required.

§ 3512.6 Withdrawal of application.

An application for permit may be withdrawn in whole or in part before the permit is signed on behalf of the United States. Upon acceptance of the withdrawal, the advance rental submitted with the application shall be refunded.

§ 3512.7 Permit bonds.

Prior to issuance of the permit, the applicant shall furnish a bond in an amount determined by the authorized officer, but not less than $1,000. (See Subpart 3504)

§ 3512.8 Terms and conditions of permit.

§ 3512.8-1 Duration of permit.

Prospecting permits are issued for an initial term of 2 years, and may be extended for a period not to exceed 4 years as provided in § 3512.9 of this title. No exploration activities shall be conducted following expiration of the initial term unless and until the permit has been extended by the authorized officer.

§ 3512.8-2 Dating of permits.

The permit shall be dated as of the first day of the month after its approval by the authorized officer unless the applicant requests in writing that it be dated the first day of the month in which it is approved.

§ 3512.8-3 Annual rental.

Rental at the rate of 50 cents per acre or fraction thereof shall be paid annually on or before the anniversary date of the permit. The rental payment shall not be less than $20.

§ 3512.8-4 Special stipulations.

To insure adequate protection of the lands and their resources, permits shall contain such stipulations as may be prescribed by the authorized officer or the responsible official of the surface management agency if the surface is not under Bureau jurisdiction as described in § 3500.9 of this title. (See also Part 3570)

§ 3512.9 Prospecting permit extensions.

§ 3512.9-1 Conditions for, and duration of, extensions.

A permit may be extended for a maximum of 4 years at the discretion of the authorized officer provided that:

(a) The permittee has been unable, with reasonable diligence, to determine the existence or workability of valuable deposits covered by the permit and desires to continue the prospecting or exploration program. Reasonable diligence means that, in the opinion of the authorized officer, the permittee has drilled a sufficient number of core holes on the permit area or performed other comparable prospecting to explore the permit area within the time allowed; or

(b) The permittee's failure to perform diligent prospecting activities was due to conditions beyond his/her control.

§ 3512.9-2 Application for extension.

(a) Filing requirements.

(1) No specific application form is required.

(2) Application for extension shall be filed in the proper BLM office at least 90 days prior to expiration of the permit.

(3) Applications for extension shall be accompanied by a nonrefundable filing fee of $25, and advance rental of 50 cents per acre, or fraction there of made payable to the Department of the Interior—Bureau of Land Management. The rental payment shall not be less than $20.

(b) The application for extension shall:

(1) Demonstrate that the permittee has met the conditions for extension set out in § 3512.9-1 of this title;

(2) Demonstrate the permittee's diligent prospecting activities; and

(3) Show how much additional time is necessary to complete prospecting work.

§ 3512.9-3 Effective date.

The permit extension shall become effective as of the date of approval.

Subpart 3513—Preference Right Lease

§ 3513.1 Application for preference right lease.

§ 3513.1-1 Filing requirements.

(a) No specific application form is required.

(b) An application shall be filed in triplicate with the proper BLM office no later than 60 days after the prospecting permit expires.

(c) The application shall be accompanied by the first year's rental at the rate of 25 cents per acre or fraction thereof made payable to the Department of the Interior—Bureau of Land Management. The rental payment shall not be less than $20. (See subpart 3503)

§ 3513.1-2 Contents of application.

(a) The application shall contain a statement of qualification and holdings in compliance with Subpart 3502 of this title.

(b) The application shall contain a complete and accurate description of the lands in accordance with § 3501.1 of this title. The lands shall have been included in the prospecting permit and shall not exceed 2,560 acres.

(c) The application shall be accompanied by a map(s) which shows utility systems, the location of any proposed development or mining operations and facilities incidental thereto, including the approximate locations and the extent of the areas to be used for pits, overburden and tailings, and the location of water sources or other resources which may be used in the proposed operations or facilities incidental thereto.

(d) The application shall include a narrative statement setting forth:

(1) The anticipated scope, method and schedule of development operations, including the types of equipment to be used;

(2) The method of mining anticipated, including the best available estimate of the mining sequence and production rate to be followed; and

(3) The relationship, if any, between the mining operations anticipated on the lands applied for and existing or planned mining operations, or facilities incidental thereto, on adjacent Federal or non-Federal lands.

§ 3513.2 Review of application.

§ 3513.2-1 Preference right determination.

The authorized officer shall determine whether the permittee has discovered a valuable deposit of phosphate. The determination shall be based on the data furnished to the authorized officer by the permittee as required by Part 3580 of this title during the life of the permit and supplemental data submitted at the request of the authorized officer to determine the extent and character of the deposit, the anticipated mining and processing methods, the anticipated location, kind and extent of necessary

surface disturbance and measures to be taken to reclaim that disturbance.

§ 3513.2-2 Surface management agency.

The surface management agency, if other than the Bureau, shall review the application for preference right lease in accordance with § 3500.9 and Part 3570 of this title, as applicable. The appropriate surface management agency may request supplemental data regarding surface disturbance and reclamation if not otherwise submitted under § 3513.1-2 of this title.

§ 3513.3 Issuance of lease.

The authorized officer shall issue a lease to the holder of a prospecting permit who shows that, within the term of the permit, a valuable deposit of phosphate was discovered.

§ 3513.4 Rejection of application.

(a) The authorized officer shall reject an application for a preference right lease if the authorized officer determines:

(1) That the applicant did not discover a valuable deposit of phosphate;

(2) The applicant did not submit in a timely manner requested information; or

(3) The applicant did not otherwise comply with the requirements of this subpart.

(b) On alleging in an application facts sufficient to show entitlement to a lease, a permittee shall have a right to a hearing before an Administrative Law Judge in the Office of Hearings and Appeals.

(c) At the hearing, the permittee shall have both the burden of going forward and the burden of proof by a preponderance of the evidence that a valuable deposit of phosphate was discovered.

Subpart 3514—Exploration License

§ 3514.0-3 Authority.

Section 302(b) of the Federal Land Policy and Management Act of 1976 (43 U.S.C. 1732(b)).

§ 3514.1 Exploration license.

Private parties, jointly or severally, may apply for exploration licenses to explore known, unleased phosphate deposits to obtain geologic, environmental and other pertinent data concerning such deposits.

§ 3514.2 Regulations applicable.

Except as otherwise specifically provided in this subpart, the regulations pertaining to land use authorizations under Part 2920 of this title shall govern the issuance of exploration licenses.

§ 3514.3 Exploration plan.

All applications for exploration licenses shall include an exploration plan which is in full compliance with § 3512.3-3 of this title. The exploration plan, as approved, shall be attached to, and made a part of, the license.

§ 3514.4 Notice of exploration.

Applicants for exploration licenses shall be required to publish a Notice of Exploration inviting other parties to participate in exploration under the license on a pro rata cost sharing basis.

§ 3514.4-1 Contents of notice.

The Notice of Exploration prepared by the authorized officer and furnished to the applicant shall contain:

(a) The name and address of the applicant;

(b) A description of the lands;

(c) The address of the Bureau office where the exploration plan shall be available for inspection; and

(d) An invitation to the public to participate in the exploration under the license.

§ 3514.4-2 Publication and posting of notice.

(a) The applicant shall publish the Notice of Exploration once a week for 3 consecutive weeks in at least 1 newspaper of general circulation in the area where the lands are located.

(b) The authorized officer shall post the notice in the proper BLM office for 30 days.

§ 3514.4-3 Notice of participation.

Any person who seeks to participate in the exploration program shall notify the authorized officer and the applicant in writing within 30 days after posting.

§ 3514.4-4 Decision on plan and participation.

The authorized officer may issue the license naming participants and acreage covered, establishing core hole spacing and resolving any other issue necessary to minimize surface disturbance and inconsistencies between proposed exploration plans.

§ 3514.5 Submission of data.

The licensee shall furnish the authorized officer copies of all data obtained during exploration. All data shall be considered confidential and not made public until either the areas involved have been leased or until the authorized officer determines that public access to the data would not damage the competitive position of the licensee, whichever is first.

§ 3514.6 Modification of exploration plan.

Upon application therefor, a modification of the exploration plan may be approved by the authorized officer.

Subpart 3515—Competitive Leasing

§ 3515.1 Lands subject only to competitive leasing.

Lands available for leasing where prospecting or exploratory work is unnecessary to determine the existence or workability of a valuable phosphate deposit may be leased only through competitive sale to the qualified bidder who offers the highest acceptable bonus bid, except as provided in Subparts 3508 and 3516 of this title. A competitive lease sale may be initiated either through an expression of interest or on Bureau motion.

§ 3515.2 Surface management agency.

Prior to competitive lease offering, the surface management agency shall be consulted in accordance with § 3500.9 and Part 3570 of this title, as applicable.

3515.3 Sale procedures.

§ 3515.3-1 Publication and posting of notice.

Prior to a lease offering, the authorized officer shall publish a notice of lease sale for at least 3 consecutive weeks in a newspaper of general circulation in the area in which the lands are situated. The notice of lease sale shall be posted for 30 days in the public room of the proper BLM office.

§ 3515.3-2 Contents of notice.

The lease sale notice shall include:

(a) The time and place of sale;

(b) The bidding method;

(c) A description of the tract being offered;

(d) A description of the phosphate deposit being offered;

(e) The minimum bid to be considered; and

(f) Information on where a detailed statement of the terms and conditions of the lease sale and of the proposed lease may be obtained.

§ 3515.3-3 Detailed statement.

The authorized officer shall also prepare and make available a detailed statement of sale containing:

(a) The lease form approved by the Director with terms and conditions, including the rental, royalty rates, bond amount, and special stipulations;

(b) An explanation of the manner in which bids may be submitted;

(c) A notice that each bid shall be accompanied by the bidder's

qualifications (See Part 3502) and one-fifth of the amount bid;

(d) A notice that the successful bidder(s) shall be required, prior to lease issuance, to pay their proportionate share of the total cost of the publication of the sale notice;

(e) A warning to all bidders concerning 18 U.S.C. 1860 which prohibits unlawful combination or intimidation of bidders;

(f) A statement that the Secretary reserves the right to reject any and all bids, and the right to offer the lease to the next qualified bidder if the successful bidder fails to obtain the lease for any reason; and,

(g) Any other information deemed appropriate.

§ 3515.4 Bid opening.

All bids shall be opened and announced at the time and date specified in the notice of lease sale, but no bids shall be accepted or rejected at that time. Bids received after the time specified in the notice of sale shall not be considered. A bid may be withdrawn or modified prior to the time specified in the notice of sale.

§ 3515.5 Award of lease.

After the authorized officer has determined that the highest qualified bid meets or exceeds fair market value, copies of the lease on the form attached to the detailed statement shall be sent to the successful bidder who shall, within a specified time, sign and return the lease form, pay the balance of the bonus bid, pay the first year's rental, pay the publication costs and furnish the required lease bond.

§ 3515.6 Rejection of bid.

(a) If the high bid is rejected for failure of the successful bidder to sign the lease form and pay the balance of the bonus bid, or otherwise comply with the regulations of this subpart, the one-fifth bonus accompanying the bid shall be forfeited to the United States.

(b) If the lease cannot be awarded for reasons determined by the authorized officer to be beyond the control of the successful bidder, the authorized officer shall reject the bid and the deposit submitted with the bid shall be returned.

Subpart 3516—Noncompetitive Leasing—Fringe Acreage Leases and Lease Modifications

§ 3516.1 Lands subject to lease.

Lands available for leasing which are known to contain a phosphate deposit that extends from an adjoining Federal lease or from privately held lands may be leased noncompetitively either by a issuance of a new lease for these lands or by adding such lands to an existing Federal lease.

§ 3516.2 Special requirements.

Before a fringe acreage lease may be issued or a lease modified under this subpart, the authorized officer shall determine the following:

(a) The lands are contiguous to an existing Federal lease or to non-Federal lands owned or controlled by the applicant;

(b)(1) The new lease for the fringe acreage is not in excess of 2,560 acres; or

(2) The acreage of the existing lease and the additional lands is not in excess of 2,560 acres;

(c) The mineral deposit is not in an area of competitive interest to holders of other active mining units in the area;

(d) The lands applied for lack sufficient reserves of the mineral resource to warrant independent development; and

(e) Leasing the lands will result in conservation of natural resources and will provide for economical and efficient recovery as part of a mining unit.

§ 3516.3 Filing requirements.

(a) An application shall be filed in triplicate with the proper BLM office. No specific application form is required.

(b) The application shall be accompanied by a nonrefundable filing fee of $25, and an advance rental payment of 25 cents per acre or fraction thereof for a new lease or at the rental rate set forth in the base lease for a modification made payable to the Department of the Interior—Bureau of Land Management. The rental payment shall not be less than $20.

(c) The application shall:

(1) Make reference to the serial number of the lease if the lands adjoin an existing Federal lease;

(2) Contain a complete and accurate description of the lands desired;

(3) Include a showing that a phosphate deposit extends from the applicant's adjoining lease or from private lands owned or controlled by the applicant; and

(4) Include proof of ownership or control of the mineral deposit in the adjoining lands if not under a Federal lease.

§ 3516.4 Surface management agency.

The surface management agency, if other than the Bureau, shall be consulted in accordance with § 3500.9 and Part 3570 of this title, as applicable.

§ 3516.5 Payment of bonus.

Prior to the issuance of a new lease or a modification of an existing lease, the applicant shall be required to pay a bonus in an amount determined by the authorized officer based on an appraisal. In no event, shall such payment be less than $1 per acre or fraction thereof.

§ 3516.6 Terms and conditions of lease.

New leases shall be issued subject to the terms and conditions set out under Subpart 3511 of this title. The terms and conditions of modified leases shall be the same as the existing leases.

Subpart 3517—Use Permits

§ 3517.1 Use permits.

A lessee or permittee may be granted a right to use the surface of unappropriated and unentered public lands, not exceeding 80 acres, not included within the boundaries of a national forest if necessary for the proper extraction, treatment or removal of the leased deposits.

§ 3517.1-1 Applications.

Applications for permits to use additional lands shall be filed in triplicate in the proper BLM office. Each application shall be accompanied by a nonrefundable $25 filing fee and the first year's rental. The rental payment shall not be less than $20.

§ 3517.1-2 Rental.

(a) The annual rental charge for use of such lands shall not be less than $1 an acre or fraction thereof. Payment of the rental shall be made on or before the anniversary date of the permit and also shall be required on all use permits issued prior to the effective date of this section.

(b) Any use permit shall terminate automatically if the permittee or lessee fails to pay the rental.

§ 3517.1-3 Additional requirements.

Applications shall set forth the specific reasons why the permittee or lessee needs any additional lands for the use named, describe the lands desired in accordance with Subpart 3501 of this title and also set forth the reasons why the lands are desirable and adapted to the use named, either in point of location, topography or otherwise, and shall assure that they are unoccupied and unappropriated. The application shall also contain an agreement to pay the annual charge prescribed in the permit.

§ 3517.2 Approval.

A use permit shall be issued on a form approved by the Director and dated as of the first day of the month after its issuance unless the applicant requests

that it be dated the first day of the month of issuance.

PART 3520—SODIUM

Subpart 3520—Sodium Leasing—General

Subpart 3521—Lease Terms and Conditions

Subpart 3522—Sodium Prospecting Permits

Subpart 3523—Preference Right Lease

Subpart 3524—Exploration License

Subpart 3525—Competitive Leasing

Subpart 3526—Noncompetitive Leasing—Fringe Acreage Leases and Lease Modifications

Subpart 3527—Use Permits

Subpart 3528—Lease Renewals

Subpart 3520—Sodium Leasing—General

§ 3520.0-3 Authorities.

Authorities for leasing deposits of chlorides, sulphates, carbonates, borates, silicates or nitrates of sodium, hereinafter referred to as deposits of sodium or any sodium compound, are shown under § 3500.0-3 of this title.

§ 3520.1 Leasing procedures.

The regulations in this part provide the procedures for qualified entities to obtain rights to develop deposits or any sodium of sodium compound found on lands available for leasing. The regulations provide for this in the following manner:

(a) "Prospecting permits" allow the permittee to explore for deposits of sodium or any sodium compound.

(b) "Preference right leases" are issued to the holders of prospecting permits who demonstrate the discovery of a valuable deposit of sodium or any sodium compound under the permit and that the lands covered by the permit are chiefly valuable therefore.

(c) "Exploration licenses" allow the licensee to explore known deposits of sodium or any sodium compound to obtain data but do not grant the licensee any preference or other right to a lease.

(d) "Competitive leases" are issued for known deposits of sodium or any sodium compound and allow the lessee to mine the deposit.

(e) "Fringe acreage leases" are issued noncompetitively for known deposits of sodium or any sodium compound adjacent to existing mines on non-Federal lands which can only be mined as part of the existing mining operation.

(f) "Lease modifications" are used to add known deposits of sodium or any sodium compound to an adjacent Federal lease which contains an existing mine provided the deposits can only be mined as part of the existing mining operation.

§ 3520.2 Other applicable regulations.

§ 3520.2-1 General leasing regulations.

Part 3500 of this title contains the general regulations governing the leasing of solid minerals other than coal and oil shale and supplements, as applicable, the regulations in this part. The Part 3500 regulations include, but are not limited to, such matters as multiple mineral development, environmental review, other agency consent and consultation, and lands not available for leasing. Cross-reference to specific regulations in Part 3500 is provided in this part as an aid to the reader and is not intended to limit the applicability of Part 3500 only to the cross-referenced regulations.

§ 3520.2-2 Special areas.

Part 3570 of this title contains regulations specific to certain national recreation areas and to certain lands patented to the State of California, and as applicable, supplements this part. Except where specific regulations in Part 3570 are applicable, the regulations in this part and Part 3500 shall govern the leasing of deposits of sodium or any sodium compound in those national recreation areas and those patented lands.

§ 3520.3 Allowable acreage holdings.

No person, company, association or corporation may hold at any particular time, directly or indirectly, more than 5,120 acres under prospecting permit and lease in any 1 State, except that, where the Secretary determines pursuant to 30 U.S.C. 184(b)(2) that it is necessary to secure the economic mining of sodium compounds, holdings may equal 15,360 acres. (See subpart 3526)

Subpart 3521—Lease Terms and Conditions

§ 3521.1 Applicability of lease terms and conditions.

The lease terms and conditions set out under this section apply to all leases issued or renewed under Part 3520 of this title. Each lease shall be issued on a form approved by the Director and shall be dated as of the first day of the month after its approval by the authorized officer unless the applicant requests in writing that it be dated the first day of

the month in which it is approved. Each lease shall authorize, in accordance with its terms and conditions, the mining of sodium, sodium compounds and other related products, including, but not limited to, potassium and potassium compounds.

§ 3521.2 Rental and royalty.

§ 3521.2-1 Rental.

(a) Each lease shall provide for the payment of rental annually and in advance for each acre or fraction thereof during the continuance of the lease at the rate of 25 cents for the first calendar year or fraction thereof, 50 cents for the second, third, fourth and fifth calendar years and $1 for each and every year thereafter. The rental paid for any year shall be credited against the first royalties as they accrue under the lease during the year for which rental was paid.

(b) If the annual rental is not timely remitted, the lessee shall be notified by the authorized officer that, unless payment is made within 30 days from receipt of such notification, action shall be taken to cancel the lease. (See § 3509.4-2)

(c) Remittances of rental shall be made in accordance with § 3503.1 of this title.

§ 3521.2-2 Production royalty.

All leases shall be conditioned upon the payment to the United States of such royalties as may be specified in the lease, which shall be fixed by the authorized officer in advance as provided under § 3503.2-1 of this title, but at not less than 2 per centum of the quantity or gross value of the output of sodium compounds and related products at the point of shipment to market.

§ 3521.3 Duration of lease.

The lease shall be issued for an initial term of 20 years subject to a preferential right in the lessee to renew at the end of the initial term and at the end of each 10-year period thereafter. (See Subpart 3528)

§ 3521.4 Bonds.

Prior to issuance of a lease under this part, the applicant shall furnish a bond in an amount to be determined by the authorized officer but not less than $5,000. (See Subpart 3504)

§ 3521.5 Special stipulations.

To insure adequate utilization and protection of the lands and their resources, leases shall contain such stipulations as may be prescribed by the authorized officer or the responsible official of the surface management agency if the surface is not under Bureau jurisdiction as described in § 3500.9 of this title. (See also Part 3570)

§ 3521.6 Other applicable regulations.

Leases issued under this part shall also be subject to the conditions set forth in other regulations, including, but not limited to, the following:

(a) Minimum annual production and minimum royalty are covered by § 3503.2-2 of this title.

(b) Suspension of operations and production and suspension of operations are covered by § 3503.3 of this title.

(c) Assignments and subleases are covered by part 3506 of this title.

(d) Cancellation and relinquishment are covered by part 3509 of this title.

(e) Exploration and mining are covered by Part 3580 of this title.

(f) Royalty management is covered by 30 CFR Chapter II, Subchapter A.

Subpart 3522—Sodium Prospecting Permits

§ 3522.1 Areas subject to prospecting.

A prospecting permit may be issued for any area of open and available Federal lands subject to leasing where prospecting or exploratory work is necessary to determine the existence or workability of deposits of sodium or any sodium compound. If, within the term of the permit, the permittee makes a discovery of a valuable deposit of 1 of these sodium compounds, and the lands are determined to be chiefly valuable therefor, the permittee is entitled to a preference right lease.

§ 3522.2 Rights conferred by issuance of prospecting permits.

A permit shall grant the permittee the exclusive right to prospect on and explore the lands to determine the existence of a valuable deposit of sodium or any sodium compound in accordance with the terms and conditions of the permit. The permittee may remove only such material as is necessary to demonstrate the existence of a valuable mineral deposit.

§ 3522.3 Application for prospecting permit.

§ 3522.3-1 Filing requirements.

(a) An application shall be filed on a form approved by the Director or an exact reproduction of that form.

(b) An application shall be filed in triplicate with the proper BLM office.

(c) The application shall be accompanied by a nonrefundable filing fee of $25, and rental for the first year at the rate of 50 cents per acre, or fraction thereof, made payable to the Department of the Interior—Bureau of Land Management. The rental payment shall be for the total acreage if known, and if not known, for the total acreage computed on the basis of 40 acres for each smallest subdivision. The rental payment shall not be less than $20.

§ 3522.3-2 Contents of applications.

Each application shall be typewritten, or printed plainly in ink; manually signed in ink and dated by the applicant or applicant's duly authorized attorney-in-fact, and shall contain the following:

(a) The name and address of the applicant;

(b) A statement of the applicant's qualifications and holdings. (See Subpart 3502); and

(c) A complete and accurate land description in compliance with subpart 3501 of this title. The application shall not include more than 2,560 acres in a reasonably compact form.

§ 3522.3-3 Exploration plans.

An exploration plan in triplicate, reasonably designed to determine the existence and workability of the deposit, shall accompany the application and shall include the following:

(a) The names, addresses and telephone numbers of persons responsible for operations under the plan and to whom notices and orders are to be delivered;

(b) A brief description, including maps, of geologic, water, vegetation, and other physical factors, and the distribution, abundance, and habitat of fish and wildlife, particularly threatened and endangered species, that may be affected by the proposed operation within the area where exploration is to be conducted, and the present land use within and adjacent to the area;

(c) A narrative description showing:

(1) The method of exploration and types of equipment to be used;

(2) The measures to be taken to prevent or control fire, soil erosion, pollution of surface and ground water, pollution of air, damage to fish and wildlife or their habitat and other natural resources and hazards to public health and safety, including specific actions necessary to meet all applicable laws and regulations;

(3) The method for plugging drill holes; and,

(4) The measures to be taken for surface reclamation, which shall include as appropriate:

(i) A reclamation schedule;

(ii) The method of grading, backfilling, soil stabilization, compacting and contouring;

(iii) The method of soil preparation and fertilizer application;

(iv) The type and mixture of shrubs, trees, grasses, forbs or other vegetation to be planted; and,

(v) The method of planting, including approximate quantity and spacing.

(d) The estimated timetable for each phase of the work and for final completion of the program;

(e) Suitable topographic maps or aerial photographs showing existing bodies of surface water, topographic, cultural and drainage features and the proposed location of drill holes, trenches and roads; and,

(f) Such other data as may be required by the authorized officer.

§ 3522.3-4 Rejection of application.

Any application for a prospecting permit which does not comply with the requirements of this subpart shall be rejected. If the applicant files a new application for the same lands within 30 days of receipt of the rejection, the nonrefundable filing fee and rental payment submitted with the original application shall be applied to the new application, provided the serial number of the original application is shown on the new application. If a new application is not filed within the 30-day period, the advance rental shall be refunded. Priority for the permit shall be established as of the date the corrected application is filed.

§ 3522.4 Determination of priorities.

§ 3522.4-1 Regular filings.

Priority of application shall be determined in accordance with the time of filing.

§ 3522.4-2 Simultaneous filings.

Where more than 1 application is filed at the same time for the same lands, priority shall be determined in accordance with Subpart 1821 of this title.

§ 3522.5 Amendment to application.

An amendment to an application for a prospecting permit to include additional lands shall receive priority for such additional lands from the date of the filing of the amended application. The amended application shall be accompanied by the required advance rental. No additional filing fees are required.

§ 3522.6 Withdrawal of application.

An application for permit may be withdrawn in whole or in part before the permit is signed on behalf of the United States. Upon acceptance of the withdrawal by the authorized officer, the advance rental submitted with the application shall be refunded.

§ 3522.7 Permit bonds.

Prior to issuance of the permit, the applicant shall furnish a bond in an amount determined by the authorized officer, but not less than $1,000. (See Subpart 3504)

§ 3522.8 Terms and conditions of permit.

§ 3522.8-1 Duration of permit.

Prospecting permits are issued for a term of 2 years, and may not be extended.

§ 3522.8-2 Dating of permits.

The permit shall be dated as of the first day of the month after its approval by the authorized officer unless the applicant requests in writing that it be dated the first day of the month in which it is approved.

§ 3522.8-3 Annual rental.

Rental at the rate of 50 cents per acre or fraction thereof shall be paid annually on or before the anniversary date of the permit. The rental payment shall not be less than $20.

§ 3522.8-4 Special stipulations.

To insure adequate protection of the lands and their resources, permits shall contain such stipulations as may be prescribed by the authorized officer or the responsible official of the surface management agency if the surface is not under Bureau jurisdiction as described in § 3500.9 of this title. (See also Part 3570)

Subpart 3523—Preference Right Lease

§ 3523.1 Application for preference right lease.

§ 3523.1-1 Filing requirements.

(a) No specific application form is required.

(b) An application shall be filed in triplicate with the proper BLM office no later than 60 days after the prospecting permit expires.

(c) The application shall be accompanied by the first year's rental at the rate of 25 cents per acre or fraction thereof made payable to the Department of the Interior—Bureau of Land Management. (See Subpart 3503)

§ 3523.1-2 Contents of application.

(a) The application shall include a statement of qualifications and holdings in accordance with Subpart 3502 of this title;

(b) The application shall contain a complete and accurate description of the lands in accordance with § 3501.1 of this title. The lands shall have been included in the prospecting permit and shall not exceed 2,560 acres;

(c) The application shall be accompanied by a map(s) which shows utility systems; the location of any proposed development or mining operations and facilities incidental thereto, including the approximate locations and the extent of the areas to be used for pits, overburden and tailings; and the location of water sources or other resources which may be used in the proposed operations or facilities incidental thereto; and

(d) The application shall include a narrative statement setting forth:

(1) The anticipated scope, method and schedule of development operations, including the types of equipment to be used;

(2) The method of mining anticipated, including the best available estimate of the mining sequence and production rate to be followed; and

(3) The relationship, if any, between the mining operations anticipated on the lands applied for and existing or planned mining operations, or facilities incidental thereto, on adjacent Federal or non-Federal lands.

§ 3523.2 Review of application.

§ 3523.2-1 Preference right determination.

The authorized officer shall determine whether the permittee has discovered a valuable deposit of sodium or any sodium compound and whether the lands are chiefly valuable therefor. The determination shall be based on data furnished to the authorized officer by the permittee as required by Part 3580 of this title during the life of the permit and supplemental data submitted at the request of the authorized officer to determine the extent and character of the deposit, the anticipated mining and processing methods, the anticipated location, kind and extent of necessary surface disturbance and measures to be taken to reclaim that disturbance.

§ 3523.2-2 Surface management agency.

The surface management agency, if other than the Bureau, shall review the application for preference right lease in accordance with § 3500.9 and Part 3570 of this title, as applicable. The appropriate surface management agency may request supplemental data regarding surface disturbance and reclamation if not otherwise submitted under § 3523.1-2 of this title.

§ 3523.3 Issuance of lease.

The authorized officer shall issue a lease to the holder of a prospecting permit who shows that, within the term of the permit, a valuable deposit of sodium or any sodium compound was

discovered and that the lands are chiefly valuable therefor.

§ 3523.4 Rejection of application.

(a) The authorized officer shall reject the application for a preference right lease if the authorized officer determines:

(1) That the applicant did not discover a valuable deposit of sodium and/or the lands are not chiefly valuable therefor;

(2) The applicant did not submit requested information in a timely manner; or

(3) The applicant did not otherwise comply with the requirements of this subpart.

(b) On alleging in an application facts the applicant believes to be sufficient to show entitlement to lease, a permittee shall have the right to a hearing before an Administrative Law Judge in the Office of Hearings and Appeals.

(c) At the hearing, the permittee shall have both the burden of going forward and the burden of proof by a preponderance of the evidence that a valuable deposit of sodium or any sodium compound was discovered and that the lands are chiefly valuable therefor.

Subpart 3524—Exploration License

§3524.0-3 Authority.

Section 302(b) of the Federal Land Policy and Management Act of 1976 (43 U.S.C. 1732(b)).

§ 3524.1 Exploration license.

Private parties, jointly or severally, may apply for exploration licenses to explore known, unleased deposits of sodium or any sodium compound to obtain geologic, environmental and other pertinent data concerning such deposits.

§ 3524.2 Regulations applicable.

Except as otherwise specifically provided in this subpart, the regulations pertaining to land use authorizations under Part 2920 of this title shall govern the issuance of exploration licenses.

§3524.3 Exploration plan.

All applications for exploration licenses shall include an exploration plan which is in full compliance with § 3522.3-3 of this title. The exploration plan, as approved, shall be attached to, and made a part of, the license.

§ 3524.4 Notice of exploration.

Applicants for exploration licenses shall be required to publish a Notice of Exploration inviting other parties to participate in exploration under the license on a pro rata cost sharing basis.

§ 3524.4-1 Contents of notice.

The Notice of Exploration prepared by the authorized officer and furnished to the applicant shall contain:

(a) The name and address of the applicant;

(b) A description of the lands;

(c) The address of the Bureau office where the exploration plan shall be available for inspection; and

(d) An invitation to the public to participate in the exploration under the license.

§ 3524.4-2 Publication and posting of notice.

(a) The applicant shall publish the Notice of Exploration once a week for 3 consecutive weeks in at least 1 newspaper of general circulation in the area where the lands are located.

(b) The authorized officer shall post the notice in the proper BLM office for 30 days.

§ 3524.4-3 Notice of participation.

Any person who seeks to participate in the exploration program shall notify the authorized officer and the applicant in writing within 30 days after posting.

§ 3524.4-4 Decision on plan and participation.

The authorized officer may issue the license naming participants and acreage covered, establishing core hole spacing and resolving any other issue necessary to minimize surface disturbance and inconsistencies between proposed exploration plans.

§ 3524.5 Submission of data.

The licensee shall furnish the authorized officer copies of all data obtained during exploration. All data shall be considered confidential and not made public either until the areas involved have been leased or until the authorized officer determines that public access to the data would not damage the competitive position of the licensee, whichever is first.

§ 3524.6 Modification of exploration plan.

Upon application therefor, a modification of the exploration plan may be approved by the authorized officer.

Subpart 3525—Competitive Leasing

§ 3525.1 Lands subject only to competitive leasing.

Lands available for leasing where prospecting or exploratory work is unnecessary to determine the existence or workability of valuable deposits of sodium or any sodium compound may be leased only through competitive sale to the qualified bidder who offers the highest acceptable bonus bid, except as provided in Subparts 3508 and 3526 of this title. A competitive lease sale may be initiated either through an expression of interest or on Bureau motion.

§ 3525.2 Surface management agency.

Prior to competitive lease offering, the surface management agency shall be consulted in accordance with § 3500.9 and Part 3570 of this title, as applicable.

§ 3525.3 Sale procedures.

§ 3525.3-1 Publication and posting of notice.

Prior to a lease offering, the authorized officer shall publish a notice of lease sale for at least 3 consecutive weeks in a newspaper of general circulation in the area in which the lands are situated. The notice of lease sale also shall be posted for 30 days in the public room of the proper BLM office.

§ 3525.3-2 Contents of notice.

The lease sale notice shall include:

(a) The time and place of sale;

(b) The bidding method;

(c) A description of the tract being offered;

(d) A description of the sodium deposit or any sodium compound deposit being offered;

(e) The minimum bid to be considered; and

(f) Information on where a detailed statement of the terms and conditions of the lease sale and of the proposed lease may be obtained.

§ 3525.3-3 Detailed statement.

The authorized officer shall also prepare and make available a detailed statement of sale containing:

(a) The lease form approved by the Director with terms and conditions, including the rental, royalty rates, bond amount and special stipulations;

(b) An explanation of the manner in which bids may be submitted;

(c) A notice that each bid shall be accompanied by the bidder's qualifications (See Subpart 3502) and one-fifth of the amount bid;

(d) A notice that the successful bidder(s) shall be required, prior to lease issuance, to pay their proportionate share of the total cost of the publication of the sale notice;

(e) A warning to all bidders concerning 18 U.S.C. 1860 which prohibits unlawful combination or intimidation of bidders;

(f) A statement that the Secretary reserves the right to reject any and all bids, and the right to offer the lease to the next qualified bidder if the

successful bidder fails to obtain the lease for any reason; and

(g) Any other information deemed appropriate.

§ 3525.4 Bid opening.

All bids shall be opened and announced at the time and date specified in the notice of lease sale, but no bids shall be accepted or rejected at that time. Bids received after the time specified in the notice of sale shall not be considered. A bid may be withdrawn or modified prior to the time specified in the notice of sale.

§ 3525.5 Award of lease.

After the authorized officer has determined that the highest qualified bid meets or exceeds fair market value, copies of the lease on the form attached to the detailed statement shall be sent to the successful bidder who shall, within a specified time, sign and return the lease form, pay the balance of the bonus bid, pay the first year's rental, pay the publication costs and furnish the required lease bond.

§ 3525.6 Rejection of bid.

(a) If the high bid is rejected for failure of the successful bidder to sign the lease form and pay the balance of the bonus bid, or otherwise comply with the regulations of this subpart, the one-fifth bonus accompanying the bid shall be forfeited to the United States.

(b) If the lease cannot be awarded for reasons determined by the authorized officer to be beyond the control of the successful bidder, the authorized officer shall reject the bid and the deposit submitted with the bid shall be returned.

Subpart 3526—Noncompetitive Leasing—Fringe Acreage Leases and Lease Modifications

§ 3526.1 Lands subject to lease.

Lands available for leasing which are known to contain a deposit of sodium or any sodium compound that extends from an adjoining Federal lease or from privately held lands may be leased noncompetitively either by issuance of a new lease for these lands or by adding such lands to an existing Federal lease.

§ 3526.2 Special requirements.

Before a fringe acreage lease may be issued or a lease modified under this subpart, the authorized officer shall determine the following:

(a) The lands are contiguous to an existing Federal lease or to non-Federal lands owned or controlled by the applicant;

(b)(1) The new lease for the fringe acreage is not in excess of 2,560 acres; or

(2) The acreage of the existing lease and additional lands is not in excess of 2,560 acres;

(c) The mineral deposit is not in an area of competitive interest to holders of other active mining units in the area;

(d) The lands applied for lack sufficient reserves of the mineral resource to warrant independent development; and

(e) That leasing the lands will result in conservation of natural resources and will provide for economical and efficient recovery as part of a mining unit.

§ 3526.3 Filing requirements.

(a) An application shall be filed in triplicate with proper BLM office. No specific application form is required.

(b) The application shall be accompanied by a nonrefundable filing fee of $25, and an advance rental payment of 25 cents per acre or fraction thereof for a new lease or at the rental rate set forth in the base lease for a modification made payable to the Department of the Interior—Bureau of Land Management.

(c) The application shall:

(1) Make reference to the serial number of the lease if the lands adjoin an existing Federal lease;

(2) Contain a complete and accurate description of the lands desired;

(3) Include a showing that a sodium deposit or any sodium compound deposit extends from the applicant's adjoining lease or from private lands owned or controlled by the applicant; and

(4) Include proof of ownership or control of the mineral deposit in the adjoining lands if not under a Federal lease.

§ 3526.4 Surface management agency.

The surface management agency, if other than the Bureau, shall be consulted in accordance with § 3500.9 and Part 3570 of this title.

§ 3526.5 Payment of bonus.

Prior to the issuance of a new lease or a modification of an existing lease, the applicant shall be required to pay a bonus in an amount determined by the authorized officer based on an appraisal. In no event shall such payment be less than $1 per acre or fraction thereof.

§ 3526.6 Terms and conditions of lease.

New leases shall be issued subject to the terms and conditions set out under Subpart 3521 of this title. The terms and conditions of a modified lease shall be the same as the existing lease.

Subpart 3527—Use Permits

§ 3527.1 Use permits.

A permittee or lessee may be granted a right to use, during the life of the permit or lease, the surface of unoccupied non-mineral public lands, not to exceed 40 acres, that are not included within the boundaries of a national forest, for camp sites, refining works and other purposes connected with, if necessary to, the proper development and use of the deposits covered by the permit or lease.

§ 3527.1 Applications.

Applications for permits to use additional lands shall be filed in triplicate in the proper BLM office. No specific form is required. Each application shall be accompanied by a nonrefundable $25 filing fee and the first year's rental. The rental payment shall not be less than $20.

§ 3527.1-2 Rental.

The annual rental charge for use of such lands shall not be less than $1 an acre or fraction thereof. Payment of the rental shall be made on or before the anniversary date of the permit and also shall be required on all use permits issued prior to the effective date of this section. Any use permit shall terminate automatically if the permittee or lessee fails to pay the required rental.

§ 3527.1-3 Additional requirements.

Applications shall set forth the specific reasons why the permittee or lessee needs the additional lands for the use named, describe the lands desired in accordance with Subpart 3501 of this title and also set forth the reasons why the lands are desirable and adapted to the use named, either in point of location, topography or otherwise, and shall assure that they are unoccupied and unappropriated. The application shall also contain an agreement to pay the annual charge prescribed in the permit.

§ 3527.2 Approval.

A use permit shall be issued on a form approved by the Director and dated as of the first day of the month after its issuance unless the applicant requests in writing that it be dated the first day of the month of issuance.

Subpart 3528—Lease Renewals

§ 3528.1 Applications.

An application for lease renewal shall be filed at least 1 year prior to the expiration of the lease term. No specific form is required. All applications shall be filed in triplicate in the proper BLM

office together with a nonrefundable $25 filing fee and an advance rental payment of $1 per acre or fraction thereof.

§ 3528.2 Bonds.

Prior to the issuance of a renewal lease, the lessee may be required to furnish a new bond as prescribed by Subpart 3504 of this title.

§ 3528.3 Failure to apply for renewal.

If the holder of a lease fails to apply for renewal as provided in § 3528.1 of this title, the lease shall expire on the last day of the current lease term.

§ 3528.4 Lease terms and conditions.

Each lease, if renewed, shall be issued on a form approved by the Director and shall be effective the first day of the month following its approval by the authorized officer or the first day of the month following the expiration of the current lease, whichever is later, and shall otherwise be subject to the terms and conditions set forth under Subpart 3521 of this title.

PART 3530—POTASSIUM

Subpart 3530—Potassium Leasing—General

Subpart 3531—Lease Terms and Conditions

Subpart 3532—Potassium Prospecting Permits

Subpart 3533—Preference Right Lease

Subpart 3534—Exploration License

Subpart 3535—Competitive Leasing

Subpart 3536—Noncompetitive Leasing—Fringe Acreage Leases and Lease Modifications

Subpart 3530—Potassium Leasing—General

§ 3530.0-3 Authorities.

Authorities for leasing deposits of chlorides, sulphates, carbonates, borates, silicates or nitrates of potassium, hereinafter referred to as deposits of potassium or any potassium compound, are shown under § 3500.0-3 of this title.

§ 3530.1 Leasing procedures.

The regulations in this part provide the procedures for qualified entities to obtain rights to develop deposits of potassium or any potassium compoundfound on lands available for leasing. The regulations provide for this in the following manner:

(a) "Prospecting permits" allow the permittee to explore for deposits of potassium or any potassium compound.

(b) "Preference right leases" are issued to the holders of prospecting permits who demonstrate the discovery of a valuable deposit of potassium or any potassium compound under the permit and the lands covered by the permit are chiefly valuable for potassium or any potassium compound.

(c) "Exploration licenses" allow the licensee to explore known deposits of potassium or any potassium compound to obtain data but do not grant the licensee any preference or other right to a lease.

(d) "Competitive leases" are issued for known deposits of potassium or any potassium compound and allow the lessee to mine the deposit.

(e) "Fringe acreage leases" are issued noncompetitively for known deposits of potassium or any potassium compound adjacent to existing mines on non-Federal lands which can only be mined as part of the existing mining operation.

(f) "Lease modifications" are used to add known deposits of potassium or any potassium compound to an adjacent Federal lease with contains an existing mine, provided the deposits can only be mined as part of the existing mining operation.

§ 3530.2 Other applicable regulations.

§ 3530.2-1 General leasing regulations.

Part 3500 of this title contains the general regulations governing the leasing of solid minerals other than coal and oil shale and supplements, as applicable, the regulations in this part. The Part 3500 regulations include, but are not limited to, such matters as multiple mineral development, environmental review, other agency consent and consultation, and lands not available for leasing. Cross-reference to specific regulations in Part 3500 is provided in this part as an aid to the reader and is not intended to limit the applicability of Part 3500 only to the cross-referenced regulations.

§ 3530.2-2 Special areas.

Part 3570 of this title contains regulations specific to certain national recreation areas and to certain lands patented to the State of California, and as applicable, supplements this part. Except where specific regulations in Part 3570 are applicable, the regulations in this part and Part 3500 shall govern the leasing of deposits of potassium or any potassium compound in those national recreation areas and those patented lands.

§ 3530.3 Allowable acreage holdings.

No person, association or corporation shall hold at any particular time, either

directly or indirectly, more than 51,200 acres in permits or 25,600 acres in leases in any 1 State.

Subpart 3531—Lease Terms and Conditions

§ 3531.1 Applicability of lease terms and conditions.

The lease terms and conditions set out under this section apply to all leases issued or readjusted under Part 3530 of this title. Each lease shall be issued on a form approved by the Director and shall be dated as of the first day of the month after its approval by the authorized officer unless the applicant requests in writing that it be dated the first day of the month in which it is approved. Each lease shall authorize, in accordance with its terms and conditions, the mining of potassium, potassium compounds and other related products, including, but not limited to, sodium and sodium compounds.

§ 3531.2 Rental and royalty.

§ 3531.2-1 Rental.

(a) Each lease shall provide for the payment of rental at the rate of 25 cents per acre or fraction thereof for the first calendar year or fraction thereof, 50 cents for the second, third, fourth and fifth years and $1 for the sixth and each succeeding year during the continuance of the lease. Rental is payable annually on or before January 1. The rental paid for any year shall be credited against the first royalties that accrue under the lease during the year for which the rental was paid.

(b) If the annual rental is not timely remitted, the lease shall be notified by the authorized officer that, unless payment is made within 30 days from receipt of such notification, action shall be taken to cancel the lease. (See § 3509.4-2)

(c) Remittances of rental shall be made in accordance with § 3503.1 of this title.

§ 3531.2-2 Production royalty.

All leases shall be conditioned upon the payment of such royalties as may be specified in the lease as fixed by the authorized officer in advance as provided under § 3503.2-1 of this title, but shall not be less than 2 per centum of the quantity or gross value of the output of potassium compounds and other related products, except sodium, at the point of shipment to market.

§ 3531.3 Duration of lease.

The lease shall be issued for an indeterminate period subject to the Secretary's right of reasonable readjustment of lease terms and conditions at the end of each 20-year period.

§ 3531.4 Readjustment.

The terms and conditions of a lease are subject to reasonable readjustment at the end of each 20-year period following the effective date of the lease unless otherwise provided by law at the time of expiration of such periods. Prior to the expiration of each 20-year period, the lessee shall be notified by the authorized officer as to whether the lease terms and conditions are to be readjusted. If the authorized officer fails to so notify the lessee, or if the proposed readjusted terms and conditions are not transmitted to the lessee during the 2 years prior to the anniversary date, the right to readjust the lease shall have been waived until the expiration of the next 20-year term.

The lessee is deemed to have agreed to the readjusted terms and conditions unless, within 60 days after receiving them, the lessee files an objection thereto, or relinquishes the lease. If objections are filed timely, but a mutual agreement between the lessee and the authorized officer cannot be reached, the authorized officer shall issue a formal decision of readjustment which the lessee may appeal in accordance with part 4 of this title.

§ 3531.5 Bonds.

Prior to issuance of a lease under this part, the applicant shall furnish a bond in an amount to be determined by the authorized officer but not less than $5,000. (See Subpart 3504)

§ 3531.6 Special stipulations.

To insure adequate utilization and protection of the lands and their resources, leases shall contain such stipulations as may be prescribed by the authorized officer or the responsible official of the surface management agency if the surface is not under Bureau jurisdiction.

§ 3531.7 Other applicable regulations.

Leases issued under this part shall also be subject to the conditions set forth in other regulations, including, but not limited to, the following:

(a) Minimum annual production and minimum royalty are covered by § 3503.2-2 of this title.

(b) Suspension of operations and production and suspension of operations are covered by § 3503.3 of this title.

(c) Assignments and subleases are covered by Subpart 3506 of this title.

(d) Cancellation and relinquishment are covered by Subpart 3509 of this title.

(e) Exploration and mining are covered by Part 3580 of this title.

(f) Royalty management is covered by 30 CFR Chapter II, Subchapter A.

Subpart 3532—Potassium Prospecting Permits

§ 3532.1 Areas subject to prospecting.

A prospecting permit may be issued for any area of open and available Federal lands subject to leasing where prospecting or exploratory work is necessary to determine the existence or workability of deposits of potassium or any potassium compound, except prospecting permits may not be issued for lands in or adjacent to Searles Lake, California. If, within the term of the permit, the permittee makes a discovery of a valuable deposit of potassium or any potassium compound, and the lands are determined to be chiefly valuable therefor, the permittee is entitled to a preference right lease.

§ 3532.2 Rights conferred by issuance of prospecting permits.

A permit shall grant the permittee the exclusive right to prospect on and explore the lands to determine the existence of a valuable deposit of potassium or any potassium compound. The permittee may remove only such material as may be necessary to demonstrate the existence of a valuable mineral deposit.

§ 3532.3 Application for prospecting permit.

§ 3532.3-1 Filing requirements.

(a) An application shall be filed on a form approved by the Director or an exact reproduction of such form.

(b) An application shall be filed in triplicate with the proper BLM office.

(c) The application shall be accompanied by a nonrefundable filing fee of $25, and rental for the first year at the rate of 50 cents per acre, or fraction thereof made payable to the Department of the Interior—Bureau of Land Management. The rental payment shall be for the total acreage if known, and if not known, for the total acreage computed on the basis of 40 acres for each smallest subdivision, but shall not be less than $20.

§ 3532.3-2 Contents of applications.

Each application shall be typewritten or printed plainly in ink; manually signed in ink and dated by the applicant or applicant's duly authorized attorney-in-fact, and shall contain the following:

(a) The name and address of the applicant;

(b) A statement of the applicant's qualifications and holdings. (See Subpart 3502); and

(c) A complete and accurate land description in compliance with Subpart 3501 of this title. The application shall not include more than 2,560 acres in a reasonably compact form.

§ 3532.3-3 Exploration plans.

An exploration plan in triplicate, reasonably designed to determine the existence and workability of the deposit, shall accompany the application and shall include the following:

(a) The names, addresses and telephone numbers of persons responsible for operations under the plan and to whom notices and orders are to be delivered;

(b) A brief description, including maps, of geologic, water, vegetation, and other physical factors, and the distribution, abundance and habitat of fish and wildlife, particularly threatened and endangered species, that may be affected by the proposed operation within the area where exploration is to be conducted, and the present land use within and adjacent to the area;

(c) A narrative description showing:

(1) The method of exploration and types of equipment to be used;

(2) The measures to be taken to prevent or control fire, soil erosion, pollution of surface and ground water, pollution of air, damage to fish and wildlife or their habitat and other natural resources, and hazards to public health and safety, including specific actions necessary to meet all applicable laws and regulations;

(3) The method for plugging drill holes; and,

(4) The measures to be taken for surface reclamation, which shall include as appropriate:

(i) A reclamation schedule;

(ii) The method of grading, backfilling, soil stabilization, compacting and contouring;

(iii) The method of soil preparation and fertilizer application;

(iv) The type and mixture of shrubs, trees, grasses, forbs or other vegetation to be planted; and

(v) The method of planting, including approximate quantity and spacing;

(d) The estimated timetable for each phase of the work and for final completion of the program;

(e) Suitable topographic maps or aerial photographs showing existing bodies of surface water, topographic, cultural and drainage features, and the proposed location of drill holes, trenches and roads; and,

(f) Such other data as may be required by the authorized officer.

§ 3532.3-4 Rejection of application.

Any application for a prospecting permit that does not comply with the requirements of this subpart shall be rejected. If the applicant files a new application for the same lands within 30 days from receipt of the rejection, the nonrefundable filing fee and rental payment submitted with the original application shall be applied to the new application, provided the serial number of the original application is shown on the new application. If a new application is not filed within the 30-day period, the advance rental shall be refunded. Priority for the permit shall be established as of the date the corrected application is filed.

§ 3532.4 Determination of priorities.

§ 3532.4-1 Regular filings.

Priority of application shall be determined in accordance with the time of filing.

§ 3532.4-2 Simultaneous filings.

Where more than 1 application is filed at the same time for the same lands, priority shall be determined in accordance with Subpart 1821 of this title.

§ 3532.5 Amendment to application.

An amendment to an application for a prospecting permit to include additional lands shall receive priority for such additional lands from the date of the filing of the amended application. The amended application shall be accompanied by the required advance rental. No additional filing fees are required.

§ 3532.6 Withdrawal of application.

An application for permit may be withdrawn in whole or in part before the permit is signed on behalf of the United States. Upon acceptance of the withdrawal by the authorized officer, the advance rental submitted with the application shall be refunded.

§ 3532.7 Permit bonds.

Prior to issuance of the permit, the applicant shall furnish a bond in an amount determined by the authorized officer, but not less than $1,000. (See Subpart 3504)

§ 3532.8 Terms and conditions of permit.

§ 3532.8-1 Duration of permit.

Prospecting permits are issued for a term of 2 years, and may be extended for an additional 2 year period. No exploration activities shall be conducted following expiration of the initial term unless and until the permit has been extended by the authorized officer.

§ 3532.8-2 Dating of permits.

The permit shall be dated as of the first day of the month after its approval by the authorized officer unless the applicant requests in writing that it be dated the first day of the month in which it is approved.

§ 3532.8-3 Annual rental.

Rental at the rate of 50 cents per acre or fraction thereof shall be paid annually on or before the anniversary date of the permit. The rental payment shall not be less than $20.

§ 3532.8-4 Special stipulations.

To insure adequate protection of the lands and their resources, permits shall contain such stipulations as may be prescribed by the authorized officer or the responsible official of the surface management agency if the surface is not under Bureau jurisdiction as described in §3500.9 of this title. (See also Part 3570)

§ 3532.9 Prospecting permit extensions.

§ 3532.9-1 Conditions for, and duration of, extensions.

A permit may be extended for a maximum of 2 years by the authorized officer provided that:

(a) The permittee has been unable, with reasonable diligence, to determine the existence or workability of valuable deposits covered by the permit and desires to continue the prospecting or exploration program. Reasonable diligence means that, in the opinion of the authorized officer, the permittee has drilled a sufficient number of core holes on the permit area or performed other comparable prospecting to explore the permit area within the time allowed; or

(b) The permittee's failure to perform diligent prospecting activities was due to conditions beyond his/her control.

§ 3532.9-2 Application for extension.

(a) Filing requirements.

(1) No specific application form is required.

(2) Application for extension shall be filed in the proper BLM office at least 90 days prior to expiration of the permit.

(3) Applications for extension shall be accompanied by a nonrefundable filing fee of $25, and advance rental of 50 cents per acre or fraction thereof made payable to the Department of the Interior—Bureau of Land Management. The rental payment shall not be less than $20.

(b) The application for extension shall, if applicable:

(1) Demonstrate that the permittee has met the conditions for extension set forth in § 3532.9-1 of this title;

(2) Demonstrate the permittee's diligent prospecting activities; and

(3) Show how much additional time is necessary to complete prospecting work.

§ 3532.9-3. Effective date.

The permit extension shall become effective as of the date of approval.

Subpart 3533—Preference Right Lease

§ 3533.1 Application for preference right lease.

§ 3533.1-1 Filing requirements.

(a) No specific application form is required.

(b) An application shall be filed in triplicate with the proper BLM office no later than 60 days after the prospecting permit expires.

(c) The application shall be accompanied by the first year's rental at the rate of 25 cents per acre or fraction thereof made payable to the Department of the Interior—Bureau of Land Management. (See Subpart 3503)

§ 3533.1-2 Contents of application.

(a) The application shall include a statement of qualification and holdings in accordance with Subpart 3502 of this title.

(b) The application shall contain a complete and accurate description of the lands in accordance with § 3501.1 of this title. The lands shall have been included in the prospecting permit and shall not exceed 2,560 acres.

(c) The application shall be accompanied by a map(s) which shows utility systems; the location of any proposed development or mining operations and facilities incidental thereto, including the approximate locations and the extent of the areas to be used for pits, overburden and tailings; and the location of water sources or other resources which may be used in the proposed operations or facilities incidental thereto.

(d) The application shall include a narrative statement setting forth:

(1) The anticipated scope, method and schedule of development operations, including the types of equipment to be used;

(2) The method of mining anticipated, including the best available estimate of the mining sequence and production rate to be followed; and

(3) The relationship, if any, between the mining operations anticipated on the lands applied for and existing or planned mining operations, or facilities incidental thereto, on adjacent Federal or non-Federal lands.

§ 3533.2 Review of application.

§ 3533.2-1 Preference right determination.

The authorized officer shall determine whether the permittee has discovered a valuable deposit of potassium or any potassium compound and whether the lands are chiefly valuable therefor. The determination shall be based on data furnished to the authorized officer by the permittee as required by Part 3580 of this title during the life of the permit and supplemental data submitted at the request of the authorized officer to determine the extent and character of the deposit, the anticipated mining and processing methods, the anticipated location, kind and extent of necessary surface disturbance and measures to be taken to reclaim that disturbance.

§ 3533.2-2 Surface management agency.

The surface management agency, if other than the Bureau, shall review the application for preference right lease in accordance with § 3500.9 and Part 3570 of this title, as applicable. The appropriate surface management agency may request supplemental data regarding surface distrurbance and reclamation if not otherwise submitted under § 3533.1-2 of this title.

§ 3533.3 Issuance of lease.

The authorized officer shall issue a lease to the holder of a prospecting permit who shows that, within the term of the permit, a valuable deposit of potassium or any potassium compound was discovered and that the lands are chiefly valuable therefor.

§ 3533.4 Rejection of application.

(a) The authorized officer shall reject an application for a preference right lease if the authorized officer determines:

(1) That the applicant did not discover a valuable deposit of potassium and/or the lands are not chiefly valuable therefor;

(2) The applicant did not submit in a timely manner requested information; or

(3) The applicant did not otherwise comply with the requirements of this subpart.

(b) On alleging in an application facts the applicant believes to be sufficient to show entitlement to a lease, a permittee shall have the right to a hearing before an Administrative Law Judge in the Office of Hearings and Appeals.

(c) At the hearing, the permittee shall have both the burden of going forward and the burden of proof by a preponderance of the evidence that a valuable deposit of potassium or any potassium compound was discovered and that the lands are chiefly valuable therefor.

Subpart 3534—Exploration License

§ 3534.0-3 Authority.

Section 302(b) of the Federal Land Policy and Management Act of 1976 (43 U.S.C. 1732(b)).

§ 3534.1 Exploration license.

Private parties, jointly or severally, may apply for exploration licenses to explore known, unleased deposits of potassium or any potassium compound to obtain geologic, environmental and other pertinent data concerning such deposits.

§ 3534.2 Regulations applicable.

Except as otherwise specifically provided in this subpart, the regulations pertaining to land use authorizations under Part 2920 of this title shall govern the issuance of exploration licenses.

§ 3534.3 Exploration plan.

All applications for exploration licenses shall include an exploration plan which is in full compliance with § 3532.3-3 of this title. The exploration plan, as approved, shall be attached to, and made a part of, the license.

§ 3534.4 Notice of exploration.

Applicants for exploration licenses shall be required to publish a Notice of Exploration inviting other parties to participate in exploration under the license on a pro rata cost sharing basis.

§ 3534.4-1 Contents of notice.

The Notice of Exploration prepared by the authorized officer and furnished to the applicant shall contain:

(a) The name and address of the applicant;

(b) A description of the lands;

(c) The address of the Bureau office where the exploration plan shall be available for inspection; and

(d) An invitation to the public to participate in the exploration under the license.

§ 3534.4-2 Publication and posting of notice.

(a) The applicant shall publish the Notice of Exploration once a week for 3 consecutive weeks in at least 1 newspaper of general circulation in the area where the lands are located.

(b) The authorized officer shall post the notice in the proper BLM office for 30 days.

§ 3534.4-3 Notice of participation.

Any person who seeks to participate in the exploration program shall notify the authorized officer and the applicant in writing within 30 days after posting of the Notice of Exploration.

§ 3534.4-4 Decision on plan and participation.

The authorized officer may issue the license naming participants and acreage covered, establishing core hole spacing and resolving any other issue necessary to minimize surface disturbance and inconsistencies between proposed exploration plans.

§ 3534.5 Submission of data.

The licensee shall furnish the authorized officer copies of all data obtained during exploration. All data shall be considered confidential and not made public either until the areas involved have been leased or until the authorized officer determines that public access to the data would not damage the competitive position of the licensee, whichever is first.

§ 3534.6 Modification of exploration plan.

Upon application therefor, a modification of the exploration plan may be approved by the authorized officer.

Subpart 3535—Competitive Leasing

§ 3535.1 Lands subject only to competitive leasing.

Lands available for leasing where prospecting or exploratory work is unnecessary to determine the existence or workability of a valuable deposit of potassium or any potassium compound may be leased only through competitive sale to the qualified bidder who offers the highest acceptable bonus bid, except as provided in Parts 3508 and 3536 of this title. A competitive lease sale may be initiated either through an expression of interest or on Bureau motion.

§ 3535.2 Surface management agency.

Prior to competitive lease offering, the surface management agency shall be consulted in accordance with § 3500.9 and Part 3570 of this title, as applicable.

§ 3535.3 Sale procedures.

§ 3535.3-1 Publication and posting of notice.

Prior to a lease offering, the authorized officer shall publish a notice of lease sale for at least 3 consecutive weeks in a newspaper of general circulation in the area in which the lands are situated. The notice of lease sale also shall be posted for 30 days in the public room of the proper BLM office.

§ 3535.3-2 Contents of notice.

The lease sale notice shall include:

(a) The time and place of sale;

(b) The bidding method;

(c) A description of the tract being offered;

(d) A description of the deposit of potassium or any potassium compound being offered;

(e) The minimum bid to be considered; and

(f) Information on where a detailed statement of the terms and conditions of the lease sale and of the proposed lease may be obtained.

§ 3535.3-3 Detailed statement.

The authorized officer shall also prepare and make available a detailed statement of sale containing:

(a) The lease form approved by the Director with terms and conditions, including the rental, royalty rates, bond amount and special stipulations;

(b) An explanation of the manner in which bids may be submitted;

(c) A notice that each bid shall be accompanied by the bidder's qualifications (See Subpart 3502) and one-fifth of the amount bid;

(d) A notice that the successful bidder(s) shall be required, prior to lease issuance, to pay their proportionate share of the total cost of the publication of the sale notice;

(e) A warning to all bidders concerning 18 U.S.C. 1860 which prohibits unlawful combination or intimidation of bidders;

(f) A statement that the Secretary reserves the right to reject any and all bids, and the right to offer the lease to the next qualified bidder if the successful bidder fails to obtain the lease for any reason; and

(g) Any other information deemed appropriate.

§ 3535.4 Bid opening.

All bids shall be opened and announced at the time and date specified in the notice of lease sale, but no bids shall be accepted or rejected at that time. Bids received after the time specified in the notice of sale shall not be considered. A bid may be withdrawn or modified prior to the time specified in the notice of sale.

§ 3535.5 Award of lease.

After the authorized officer has determined that the highest qualified bid meets or exceeds fair market value, copies of the lease on the form attached to the detailed statement shall be sent to the successful bidder who shall, within a specified time, sign and return the lease form, pay the balance of the bonus bid, pay the first year's rental, pay the publication costs and furnish the required lease bond.

§ 3535.6 Rejection of bid.

(a) If the high bid is rejected for failure of the successful bidder to sign the lease form and pay the balance of the bonus bid, or otherwise comply with the regulations of this subpart, the one-fifth bonus accompanying the bid shall be forfeited to the United States.

(b) If the lease cannot be awarded for reasons determined by the authorized officer to be beyond the control of the successful bidder, the authorized officer shall reject the bid and the deposit submitted with the bid shall be returned.

Subpart 3536—Noncompetitive Leasing—Fringe Acreage Leases and Lease Modifications

§ 3536.1 Lands subject to lease.

Lands available for leasing which are known to contain a deposit of potassium or any potassium compound that extends from an adjoining Federal lease or from privately held lands may be leased noncompetitively either by issuance of a new lease for these lands or by adding such lands to an existing Federal lease.

§ 3536.2 Special requirements.

Before a fringe acreage lease may be issued or a lease modified under this subpart, the authorized officer shall determine the following:

(a) The lands are contiguous to an existing Federal lease or to non-Federal lands owned or controlled by the applicant;

(b)(1) The new lease for the fringe acreage is not in excess of 2,560 acres; or

(2) The acreage of the existing lease and additional lands is not in excess of 2,560 acres;

(c) The mineral deposit is not in an area of competitive interest to holders of other active mining units in the area;

(d) The lands applied for lack sufficient reserves of the mineral resource to warrant independent development; and

(e) That leasing the lands will result in conservation of natural resources and will provide for economical and efficient recovery as part of a mining unit.

§ 3536.3 Filing requirements.

(a) An application shall be filed in triplicate with the proper BLM office. No specific application form is required.

(b) The application shall be accompanied by a nonrefundable filing fee of $25, and an advance rental payment of 25 cents per acre or fraction thereof for a new lease or at the rental rate set forth in the base lease for a modification made payable to the Department of the Interior—Bureau of Land Management.

(c) The application shall:

(1) Make reference to the serial number of the lease if the lands adjoin an existing Federal lease;

(2) Contain a complete and accurate description of the lands desired;

(3) Include a showing that a deposit of potassium or any potassium compound extends from the applicant's adjoining lease or from private lands owned or controlled by the applicant; and

(4) Include proof of ownership or control of the mineral deposit in the adjoining lands if not under a Federal lease.

§ 3536.4 Surface management agency.

The surface management agency, if other than the Bureau, shall be consulted in accordance with § 3500.9 and Part 3570 of this title, as applicable.

§ 3536.5 Payment of bonus.

Prior to the issuance of a new lease or a modification of an existing lease, the applicant shall be required to pay a bonus in an amount determined by the authorized officer based on an appraisal. In no event shall such payment be less than $1 per acre or fraction thereof.

§ 3536.6 Terms and conditions of lease.

New leases shall be issued subject to the terms and conditions set out under Subpart 3531 of this title. The terms and conditions of a modified lease shall be the same as the existing lease.

PART 3540—SULPHUR

Subpart 3540—Sulphur Leasing—General

Subpart 3541—Lease Terms and Conditions

Subpart 3542—Sulphur Prospecting Permits

Subpart 3543—Preference Right Lease

Subpart 3544—Exploration License

Subpart 3545—Competitive Leasing

Subpart 3546—Noncompetitive Leasing—Fringe Acreage Leases and Lease Modifications

Subpart 3547—Lease Renewals

Subpart 3540—Sulphur Leasing—General

§ 3540.0-3 Authorities.

Authorities for leasing deposits of sulphur are shown under § 3500.0-3 of this title.

§ 3540.1 Leasing procedures.

The regulations in this part provide the procedures for qualified entities to obtain rights to develop deposits of sulphur found on Federal lands in New Mexico and Louisiana and on acquired Federal lands which are available for leasing. The regulations provide for this in the following manner:

(a) "Prospecting permits" allow the permittee to explore for deposits of sulphur.

(b) "Preference right leases" are issued to holders of prospecting permits who demonstrate the discovery of a valuable deposit of sulphur under the permit and demonstrate that the lands covered by the permit are chiefly valuable for sulphur.

(c) "Exploration licenses" allow the licensee to explore known deposits of sulphur to obtain data but do not grant the licensee any preference or other right to a lease.

(d) "Competitive leases" are issued for known deposits of sulphur and allow the lessee to mine the deposit.

(e) "Fringe acreage leases" are issued noncompetitively for known deposits of sulphur adjacent to existing mines on non-Federal lands which can only be mined as part of the existing mining operation.

(f) "Lease modifications" are used to add known deposits of sulphur to an adjacent Federal lease which contains an existing mine provided the deposits can only be mined as part of the existing mining operation.

§ 3540.2 Other applicable regulations.

§ 3540.2-1 General leasing regulations.

Part 3500 of this title contains the general regulations governing the leasing of solid minerals other than coal and oil shale and supplements, as applicable, the regulations in this part. The Part 3500 regulations include, but are not limited to, such matters as multiple mineral development, environmental review, other agency consent and consultation, and lands not available for leasing. Cross-reference to specific regulations in Part 3500 is provided in this part as an aid to the reader and is not intended to limit the applicability of Part 3500 only to the cross-referenced regulations.

§ 3540.2-2 Special areas.

Part 3570 of this title contains regulations specific to certain national recreation areas and to certain lands patented to the State of California, and as applicable, supplements this part. Except where specific regulations in Part 3570 of this title are applicable, the regulations in this part and Part 3500 of this title shall govern the leasing of sulphur in those national recreation areas and those patented lands.

§ 3540.3 Allowable acreage holdings.

No person, company, association or corporation may hold at any particular

time, more than 1,920 acres in the aggregate in 3 prospecting permits and leases in any 1 State.

Subpart 3541—Lease Terms and Conditions

§ 3541.1 Applicability of lease terms and conditions.

The lease terms and conditions set out under this section apply to all leases issued or renewed under Part 3540 of this title. Each lease shall be issued on a form approved by the Director and shall be dated as of the first day of the month after its approval by the authorized officer unless the applicant requests in writing that it be dated the first day of the month in which it is approved. Each lease shall authorize, in accordance with its terms and conditions, the mining of sulphur.

§ 3541.2 Rental and royalty.

§ 3541.2-1 Rental.

(a) Each lease shall provide for the payment of rental annually and in advance during the continuance of the lease at the rate of 50 cents per acre or fraction thereof. The rental for any year shall be credited against the first royalties as they accrue under the lease during the year for which rental was paid.

(b) If the annual rental is not timely remitted, the lessee shall be notified by the authorized officer that, unless payment is made within 30 days from receipt of such notification, action shall be taken to cancel the lease. (See § 3509.4-2)

(c) Rental remittances shall be made in accordance with § 3503.1 of this title.

§ 3541.2-2 Production royalty.

All leases shall be conditioned upon the payment to the United States of a royalty of 5 percent of the quantity or gross value of the output of sulphur at the point of shipment to market.

§ 3541.3 Duration of lease.

The lease shall be issued for an initial term of 20 years subject to a preferential right in the lessee to renew at the end of the initial term and at the end of each 10-year period thereafter. (See Subpart 3547)

§ 3541.4 Bonds.

Prior to issuance of a lease, the applicant shall be required to furnish a bond in an amount to be determined by the authorized officer but not less than $5,000. (See Subpart 3504)

§ 3541.5 Special stipulations.

To insure adequate utilization and protection of the lands and their resources, leases shall contain such stipulations as may be prescribed by the authorized officer or the responsible official of the surface management agency if the surface is not under Bureau jurisdiction as described in § 3500.9 of this title. (See also Part 3570)

§ 3541.6 Other applicable regulations.

Leases issued under this part shall also be subject to the conditions set forth in other regulations, including, but not limited to, the following:

(a) Minimum annual production and minimum royalty are covered by § 3503.2-2 of this title.

(b) Suspension of operations and production and suspension of operations are covered by § 3503.3 of this title.

(c) Assignments and subleases are covered by Subpart 3506 of this title.

(d) Cancellation and relinquishment are covered by Subpart 3509 of this title.

(e) Exploration and mining are covered by Part 3580 of this title.

(f) Royalty management is covered by 30 CFR Chapter II, Subchapter A.

Subpart 3542—Sulphur Prospecting Permits

§ 3542.1 Areas subject to prospecting.

A prospecting permit may be issued for any area of open and available Federal lands subject to leasing where prospecting or exploratory work is necessary to determine the existence or workability of sulphur deposits. If, within the terms of the permit, the permittee makes a discovery of a valuable deposit of sulphur and the lands are determined to be chiefly valuable therefor, the permittee is entitled to a preference right lease.

§ 3542.2 Rights conferred by issuance of prospecting permits.

A permit shall grant the permittee the exclusive right to prospect on and explore the lands to determine the existence of a valuable deposit of sulphur in accordance with the terms and conditions of the permit. The permittee may remove only such material as is necessary to demonstrate the existence of a valuable mineral deposit.

§ 3542.3 Application for prospecting permit.

§ 3542.3-1 Filing requirements.

(a) An application shall be filed on a form approved by the Director or an exact reproduction of such form.

(b) An application shall be filed in triplicate with the proper BLM office.

(c) The application shall be accompanied by a nonrefundable filing fee of $25, and rental for the first year at the rate of 50 cents per acre, or fraction thereof made payable to the Department of the Interior—Bureau of Land Management. The rental payment shall be for the total acreage if known, and if not known, for the total acreage computed on the basis of 40 acres for each smallest subdivision. The rental payment shall not be less than $20.

§ 3542.3-2 Contents of applications.

Each application shall be typewritten, or printed plainly in ink; manually signed in ink and dated by the applicant or applicant's duly authorized attorney-in-fact, and shall contain the following:

(a) The name and address of the applicant;

(b) A statement of the applicant's qualifications and holdings. (See Subpart 3502); and

(c) A complete and accurate land description in compliance with subpart 3501 of this title. The application shall not include more than 640 acres in a reasonably compact form.

§ 3542.3-3 Exploration plans.

An exploration plan in triplicate, reasonably designed to determine the existence and workability of the deposit, shall accompany the application and shall include the following:

(a) The names, addresses and telephone numbers of persons responsible for operations under the plan and to whom notices and orders are to be delivered;

(b) A brief description, including maps, of geologic, water, vegetation, and other physical factors, and the distribution, abundance and habitat of fish and wildlife, particularly threatened and endangered species, that may be affected by the proposed operation within the area where exploration is to be conducted, and the present land use within and adjacent to the area;

(c) A narrative description showing:

(1) The method of exploration and types of equipment to be used;

(2) The measures to be taken to prevent or control fire, soil erosion, pollution of surface and ground water, pollution of air, damage to fish and wildlife or their habitat and other natural resources, and hazards to public health and safety, including specific actions necessary to meet all applicable laws and regulations;

(3) The method for plugging drill holes; and,

(4) The measures to be taken for surface reclamation, which shall include as appropriate:

(i) A reclamation schedule;

(ii) The method of grading, backfilling, soil stabilization, compacting and contouring;

(iii) The method of soil preparation and fertilizer application;

(iv) The type and mixture of shrubs, trees, grasses, forbs or other vegetation to be planted; and

(v) The method of planting, including approximate quantity and spacing;

(d) The estimated timetable for each phase of the work and for final completion of the program;

(e) Suitable topographic maps or aerial photographs showing existing bodies of surface water, topographic, cultural and drainage features, and the proposed location of drill holes, trenches and roads; and

(f) Such other data as may be required by the authorized officer.

§ 3542.3-4 Rejection of application.

Any application for a prospecting permit that does not comply with the requirements of this subpart shall be rejected. If the applicant files a new application for the same lands within 30 days of receipt of the rejection, the nonrefundable filing fee and rental, payment submitted with the original application shall be applied to the new application, provided the serial number of the original application is shown on the new application. If a new application is not filed within the 30-day period, the advance rental shall be refunded. Priority for the permit shall be established as of the date the corrected application is filed.

§ 3542.4 Determination of priorities.

§ 3542.4-1 Regular filings.

Priority of application shall be determined in accordance with the time of filing.

§ 3542.4-2 Simultaneous filings.

Where more than 1 application is filed at the same time for the same lands priority shall be determined in accordance with Subpart 1821 of this title.

§ 3542.5 Amendment to application.

An amendment to an application for a prospecting permit to include additional lands, not to exceed 640 acres in total, will receive priority for such additional lands from the date of the filing of the amended application. The amended application shall be accompanied by the required advance rental. No additional filing fees are required.

§ 3542.6 Withdrawal of application.

An application for permit may be withdrawn in whole or in part before the permit is signed on behalf of the United States. Upon acceptance of the withdrawal, the advance rental submitted with the application shall be refunded.

§ 3542.7 Permit bonds.

Prior to issuance of the permit, the applicant shall furnish a bond in an amount determined by the authorized officer, but not less than $1,000. (See Subpart 3504)

§ 3542.8 Terms and conditions of permit.

§ 3542.8-1 Duration of permit.

Prospecting permits are issued for a term of 2 years, and may not be extended.

§ 3542.8-2 Dating of permits.

The permit shall be dated as of the first day of the month after its approval by the authorized officer unless the applicant requests in writing that it be dated the first day of the month in which it is approved.

§ 3542.8-3 Annual rental.

Rental at the rate of 50 cents per acre or fraction thereof shall be paid annually on or before the anniversary date of the permit. The rental payment shall not be less than $20.

§ 3542.8-4 Special stipulations.

To insure adequate protection of the lands and their resources, permits shall contain such stipulations as may be prescribed by the authorized officer of the responsible official of the surface management agency if the surface is not under Bureau jurisidiction as described in § 3500.9 of this title. (See Part 3570)

Subpart 3543—Preference Right Lease

§ 3543.1 Application for preference right lease.

§ 3543.1-1 Filing requirements.

(a) No specific application form is required.

(b) An application shall be filed in triplicate with the proper BLM office no later than 60 days after the prospecting permit expires.

(c) The application shall be accompanied by the first years' rental at the rate of 50 cents per acre or fraction thereof made payable to the Department of the Interior—Bureau of Land Management. (See Subpart 3503)

§ 3543.1-2 Contents of application.

(a) The application shall include a statement of qualifications and holdings in accordance with Subpart 3502 of this title.

(b) The application shall contain a complete and accurate description of the lands in accordance with § 3501.1 of this title. The lands shall have been included in the prospecting permit and shall not exceed 640 acres.

(c) The application shall be accompanied by a map(s) which shows utility systems; the location of any proposed development or mining operations and facilities incidental thereto, including the approximate locations and the extent of the areas to be used for pits, overburden and tailings; and the location of water sources or other resources which may be used in the proposed operations or facilities incidental thereto.

(d) The application shall include a narrative statement setting forth:

(1) The anticipated scope, method and schedule of development operations, including the types of equipment to be used;

(2) The method of mining anticipated, including the best available estimate of the mining sequence and production rate to be followed; and

(3) The relationship, if any, between the mining operations anticipated on the lands applied for and existing or planned mining operations, or facilities incidental thereto, on adjacent Federal or non-Federal lands.

§ 3543.2 Review of application.

§ 3543.2-1 Preference right determination.

The authorized officer shall determine whether the permittee has discovered a valuable deposit of sulphur and whether the lands are chiefly valuable therefor. The determination shall be based on data furnished to the authorized officer by the permittee as required by Part 3580 of this title during the life of the permit and supplemental data submitted at the request of the authorized officer to determine the extent and character of the deposit, the anticipated mining and processing methods, the anticipated location, kind and extent of necessary surface disturbance and measures to be taken to reclaim that disturbance.

§ 3543.2-2 Surface management agency.

The surface management agency, if other than the Bureau, shall review the application for preference right lease in accordance with § 3500.9 and Part 3570 of this title, as applicable. The appropriate surface management agency may request supplemental data regarding surface disturbance and reclamation if not otherwise submitted under § 3543.1-2 of this title.

§ 3543.3 Issuance of lease.

The authorized officer shall issue a lease to the holder of a prospecting permit who shows that, within the term of the permit, a valuable deposit of

sulphur was discovered and that the lands are chiefly valuable therefor.

§ 3543.4 Rejection of application.

(a) The authorized officer shall reject an application for a preference right lease if the authorized officer determines:

(1) That the applicant did not discover a valuable deposit of sulphur and/or the lands are not chiefly valuable therefor;

(2) The applicant did not submit in a timely manner requested information; or

(3) The applicant did not otherwise comply with the requirements of this subpart.

(b) On alleging in an application facts the applicant believes to be sufficient to show entitlement to a lease, a permittee shall have the right to a hearing before an Administrative Law Judge in the Office of Hearings and Appeals.

(c) At the hearing, the permittee shall have both the burden of going forward and the burden of proof by a preponderance of the evidence that a valuable deposit of sulphur was discovered and that the lands are chiefly valuable therefor.

Subpart 3544—Exploration License

§ 3544.0-3 Authority.

Section 302(b) of the Federal Land Policy and Management Act of 1976 (43 U.S.C. 1732(b))

§ 3544.1 Exploration license.

Private parties, jointly and severally, may apply for exploration licenses to explore known, unleased sulphur deposits to obtain geologic, environmental, and other pertinent data concerning such deposits.

§ 3544.2 Regulations applicable.

Except as otherwise specifically provided in this subpart, the regulations pertaining to land use authorizations under Part 2920 of this title shall govern the issuance of exploration licenses.

§ 3544.3 Exploration plan.

All applications for exploration licenses shall include an exploration plan which is in full compliance with § 3542.3-3 of this title. The exploration plan, as approved, shall be attached to, and made a part of, the license.

§ 3544.4 Notice of exploration.

Applicants for exploration licenses shall be required to publish a Notice of Exploration inviting other parties to participate in exploration under the license on a pro rata cost sharing basis.

§ 3544.4-1 Contents of notice.

The Notice of Exploration prepared by the authorized officer and furnished to the applicant shall contain:

(a) The name and address of the applicant;

(b) A description of the lands;

(c) The address of the Bureau office where the exploration plan shall be available for inspection; and

(d) An invitation to the public to participate in the exploration under the license.

§ 3544.4-2 Publication and posting of notice.

(a) The applicant shall publish the Notice of Exploration once a week for 3 consecutive weeks in at least 1 newspaper of general circulation in the area where the lands are located.

(b) The authorized officer shall post the notice in the proper BLM office for 30 days.

§ 3544.4-3 Notice of participation.

Any person who seeks to participate in the exploration program shall notify the authorized officer and the applicant in writing within 30 days after posting.

§ 3544.4-4 Decision on plan and participation.

The authorized officer may issue the license naming the participants and acreage covered, establishing core hole spacing and resolving any other issue necessary to minimize surface disturbance and inconsistencies between exploration plans.

§ 3544.5 Submission of data.

The licensee shall furnish the authorized officer copies of all data obtained during exploration. All data shall be considered confidential and not made public either until the areas involved have been leased or until the authorized officer determines that public access to the data would not damage the competitive position of the licensee, whichever is first.

§ 3544.6 Modification of exploration plan.

Upon application therefor, a modification of the exploration plan may be approved by the authorized officer.

Subpart 3545—Competitive Leasing

§ 3545.1 Lands subject only to competitive leasing.

Lands available for leasing where prospecting or exploratory work is unnecessary to determine the existence or workability of a valuable sulphur deposit may be leased only through competitive sale to the qualified bidder who offers the highest acceptable bonus bid, except as provided in Subparts 3508 and 3546 of this title. A competitive lease sale may be initiated either through an expression of interest or on Bureau motion.

§ 3545.2 Surface management agency.

Prior to competitive lease offering, the surface management agency shall be consulted in accordance with § 3500.9 and Part 3570 of this title, as applicable.

§ 3545.3 Sale procedures.

§ 3545.3-1 Publication and posting of notice.

Prior to a lease offering, the authorized officer shall publish a notice of lease sale for at least 3 consecutive weeks in a newspaper of general circulation in the area in which the lands are situated. The notice of lease sale shall be posted for 30 days in the public room of the proper BLM office.

§ 3545.3-2 Contents of notice.

The lease sale notice shall include:

(a) The time and place of sale;

(b) The bidding method;

(c) A description of the tract being offered;

(d) A description of the sulphur deposit being offered;

(e) The minimum bid to be considered; and

(f) Information on where a detailed statement of the terms and conditions of the lease sale and of the proposed lease may be obtained.

§ 3545.3-3 Detailed statement.

The authorized officer shall also prepare and make available a detailed statement of sale containing:

(a) The lease form approved by the Director with terms and conditions, including the rental, royalty rates, bond amount and special stipulations;

(b) An explanation of the manner in which bids may be submitted;

(c) A notice that each bid shall be accompanied by the bidder's qualifications (See Subpart 3502) and one-fifth of the amount bid;

(d) A notice that the successful bidder(s) shall be required, prior to lease issuance, to pay their proportionate share of the total cost of the publication of the sale notice.

(e) A warning to all bidders concerning 18 U.S.C. 1860 which prohibits unlawful combination or intimidation of bidders;

(f) A statement that the Secretary reserves the right to reject any and all bids, and the right to offer the lease to the next qualified bidder if the successful bidder fails to obtain the lease for any reason; and

(g) Any other information deemed appropriate.

§ 3545.4 Bid opening.

All bids shall be opened and announced at the time and date specified in the notice of lease sale, but no bids shall be accepted or rejected at that time. Bids received after the time specified in the notice of sale shall not be considered. A bid may be withdrawn or modified prior to the time specified in the notice of sale.

§ 3545.5 Award of lease.

After the authorized officer has determined that the highest qualified bid meets or exceeds fair market value, copies of the lease on the form attached to the detailed statement shall be sent to the successful bidder who shall, within a specified time, sign and return the lease form, pay the balance of the bonus bid, pay the first year's rental, pay the publication costs and furnish the required lease bond.

§ 3545.6 Rejection of bid.

(a) If the high bid is rejected for failure of the successful bidder to sign the lease form and pay the balance of the bonus bid, or otherwise comply with the regulations of this subpart, the one-fifth bonus accompanying the bid shall be forfeited to the United States.

(b) If the lease cannot be awarded for reasons determined by the authorized officer to be beyond the control of the successful bidder, the authorized officer shall reject the bid and the deposit submitted with the bid shall be returned.

Subpart 3546—Noncompetitive Leasing—Fringe Acreage Leases and Lease Modifications

§ 3546.1 Lands subject to lease.

Lands available for leasing which are known to contain a sulphur deposit that extends from an adjoining Federal lease or from privately held lands may be leased noncompetitively either by issuance of a new lease for these lands or by adding such lands to an existing Federal lease.

§ 3546.2 Special requirements.

Before a fringe acreage lease may be issued or a lease modified under this subpart, the authorized officer shall determine the following:

(a) The lands are contiguous to an existing Federal lease or to non-Federal lands owned or controlled by the applicant;

(b)(1) The new lease for the fringe acreage is not in excess of 640 acres; or

(2) The acreage of the existing lease and additional lands is not in excess of 640 acres;

(c) The mineral deposit is not in an area of competitive interest to holders of other active mining units in the area;

(d) The lands applied for lack sufficient reserves of the mineral resources to warrant independent development; and

(e) That leasing the lands will result in conservation of natural resources and will provide for economical and efficient recovery as part of a mining unit.

§ 3546.3 Filing requirements.

(a) An application shall be filed in triplicate with the proper BLM office. No specific application form is required.

(b) The application shall be accompanied by a nonrefundable filing fee of $25, and an advance rental payment of 50 cents per acre or fraction thereof for a new lease or at the rental rate set forth in the base lease for a modification made payable to the Department of the Interior—Bureau of Land Management.

(c) The application shall:

(1) Make reference to the serial number of the lease if the lands adjoin an existing Federal lease;

(2) Contain a complete and accurate description of the lands desired;

(3) Include a showing that a sulphur deposit extends from the applicant's adjoining lease or from private lands owned or controlled by the applicant; and

(4) Include proof of ownership or control of the mineral deposit in the adjoining lands if not under a Federal lease.

§ 3546.4 Surface management agency.

The surface management agency, if other than the Bureau, shall be consulted in accordance with § 3500.9 and Part 3570 of this title, as applicable.

§ 3546.5 Payment of bonus.

(a) Prior to the issuance of a new lease or a modification of an existing lease, the applicant shall be required to pay a bonus in an amount determined by the authorized officer based on an appraisal. In no event shall such payment be less than $1 per acre or fraction thereof.

§ 3546.6 Terms and conditions of lease.

New leases shall be issued subject to the terms and conditions set out under Subpart 3541 of this title. The terms and conditions of a modified lease shall be the same as in the existing lease.

Subpart 3547—Lease Renewals

§ 3547.1 Applications.

An application for lease renewal shall be filed at least 1 year prior to the expiration of the lease term. No specific form is required. All applications shall be filed in triplicate in the proper BLM office together with a nonrefundable $25 filing fee and an advance rental payment of 50 cents per acre or fraction thereof.

§ 3547.2 Bonds.

Prior to the issuance of a renewal lease, the lessee may be required to furnish a new bond as prescribed by Subpart 3504 of this title.

§ 3547.3 Failure to apply for renewal.

If the holder of a lease fails to apply for renewal as provided in § 3547.1 of this title, the lease shall expire on the last day of the current lease term.

§ 3547.4 Lease terms and conditions.

Each renewal lease shall be issued on a form approved by the Director and shall be dated effective the first day of the month following its approval by the authorized officer or the first day of the month following the expiration of the current lease, whichever is later, and shall otherwise be subject to the terms and conditions set forth under Subpart 3541 of this title.

PART 3550—ASPHALT IN OKLAHOMA AND GILSONITE (INCLUDING ALL VEIN-TYPE SOLID HYDROCARBONS)

Subpart 3550—Asphalt in Oklahoma and Gilsonite (Including All Vein-type Solid Hydrocarbons)—General

Subpart 3551—Lease Terms and Conditions

Subpart 3553—Exploration License

Subpart 3550—Asphalt in Oklahoma and Gilsonite (Including All Vein-type Solid Hydrocarbons)—General

§ 3550.0-3 Authorities.

Authorities for leasing asphalt in Oklahoma and gilsonite (including all vein-type solid hydrocarbons) are cited under § 3500.0-3 of this title.

§ 3550.1 Leasing procedures.

The regulations in this part provide the procedures for qualified entities to obtain rights to develop deposits of asphalt on certain lands in Oklahoma and gilsonite (including all vein-type solid hydrocarbons) found on lands available for leasing. The regulations provide for this in the following manner:

(a) "Preference right leases" are issued to holders of prospecting permits who demonstrate the discovery of a valuable deposit of gilsonite under the permit.

(b) "Exploration license" allow the licensee to explore known deposits of gilsonite to obtain data but do not grant licensee any preference or other right to a lease.

(c) "Competitive leases" are issued for known deposits of asphalt in Oklahoma and gilsonite (including all vein-type solid hydrocarbons) and allow the lessee to mine the deposit.

(d) "Fringe acreage leases" are issued noncompetitively for known deposits of asphalt in Oklahoma and gilsonite (including all vein-type solid hydrocarbons) adjacent to existing mines on non-Federal lands which can only be mined as part of the existing mining operation.

(e) "Lease modifications" are used to add known deposits of asphalt in Oklahoma or gilsonite (including all vein-type solid hydrocarbons) to an adjacent Federal lease which contains an existing mine, provided the deposits can only be mined as part of the existing mining operation.

§ 3550.2 Minerals subject to leasing.

(a) By the Act of June 28, 1944 (58 Stat. 463, 483–485), Congress authorized the Secretary to acquire certain lands and mineral deposits in Oklahoma and amended the Act to authorize leasing of the asphalt deposits on those lands. The lands and mineral deposits covered by the 1944 law are those reserved from allotment in accordance with the provisions of section 58 of the Supplemental Agreement of 1902 (32 Stat. 654) with the Choctaw-Chickasaw Nations of Indians. Congress ratified the purchase contract in the Act of June 24, 1948 (62 Stat. 596), and appropriated funds for the purchase in the Act of May 24, 1949 (63 Stat. 76).

(b) In 1981, Congress amended the Act by including tar sand within the meaning of oil and retaining separate leasing authority for vein-type solid hydrocarbons such as gilsonite. Fluid and gaseous hydrocarbons are leased as oil and gas, while bedded deposits are leased either as coal, oil shale or as oil (tar sand). The leasing authority for vein-type solid hydrocarbons is implemented by the regulations in this part.

§ 3550.3 Other applicable regulations.

Part 3500 of this title contains the general regulations governing the leasing of solid minerals other than coal and oil shale and supplements, as applicable, the regulations in this part. The regulations in Part 3500 of this title include, but are not limited to, such matters as multiple mineral development, environmental review, other agency consent and consultation, and lands not available for leasing. Cross-reference to specific regulations in Part 3500 is provided in this part as an aid to the reader and is not intended to limit the applicability of Part 3500 only to the cross-referenced regulations.

§ 3550.4 Allowable acreage holdings.

§ 3550.4-1 Asphalt in Oklahoma.

No person, company, association or corporation may hold, at any time, either directly or indirectly, leases exceeding in the aggregate 2,560 acres.

§ 3550.4-2 Gilsonite (including all vein-type solid hydrocarbons).

No person, company, association or corporation may hold at any one time, directly or indirectly, more than 7,680 acres under lease in any one State.

Subpart 3551—Lease Terms and Conditions

§ 3551.1 Applicability of lease terms and conditions.

Except as otherwise specifically stated, all lease terms and conditions set out under this section apply to all leases issued, readjusted or renewed under Part 3550 of this title. Each lease shall be issued on a form approved by the Director and shall be dated as of the first day of the month after its approval by the authorized officer unless the applicant requests in writing that it be dated the first day of the month in which it is approved. Each lease shall authorize in accordance with its terms and conditions the mining of asphalt or gilsonite, including all vein-type solid hydrocarbons, as appropriate.

§ 3551.2 Rental and royalty.

§ 3551.2-1 Rental.

(a)(1) Each asphalt lease shall provide for the payment of rental annually and in advance for each acre or fraction thereof during the continuance of the lease at the rate of 25 cents for the first calendar year or fraction thereof, 50 cents for the second, third, fourth and fifth calendar years, and $1 for each calendar year thereafter. The rental paid for any year shall be credited against royalties which may accrue under the lease during the year for which rental was paid.

(2) Each gilsonite (including all vein-type solid hydrocarbons) lease shall provide for the payment of rental annually and in advance at the rate of 50 cents per acre or fraction thereof. The rental for any year shall be credited against royalties which may accrue under the lease during the year for which rental was paid.

(b) If the annual rental is not timely remitted, the lessee shall be notified by the authorized officer that, unless payment is made within 30 days from receipt of such notification, action shall be taken to cancel the lease. (See § 3509.4-2)

(c) Remittances of rentals shall be in accordance with § 3503.1 of this title.

§ 3551.2-2 Production royalty.

All leases shall be conditioned upon the payment to the United States of such royalties as may be specified in the lease, which shall be fixed by the authorized officer in advance as provided under § 3503.2-1 of this title. The royalty rate for asphalt shall not be less than 25 cents per ton of 2,000 pounds of marketable production.

§ 3551.3 Duration of lease.

§ 3551.3-1 Asphalt in Oklahoma.

(a) The lease shall be issued for an initial term of 20 years subject to a preferential right in the lessee to renew at the end of the initial term and at the end of each 10-year period thereafter.

(b)(1) An application for lease renewal shall be filed at least 1 year prior to the expiration of the lease term. There is no specific form required. All applications shall be filed in triplicate in the proper BLM office together with a nonrefundable $25 filing fee and an advance rental payment of $1 per acre or fraction thereof. If the holder of a lease fails to apply for renewal timely, the lease shall expire on the last day of the lease term.

(2) Prior to the issuance of a renewal lease, the lessee may be required to furnish a new bond as prescribed by Subpart 3504 of this title.

(3) Each renewal lease shall be issued on a form approved by the Director and shall be effective the first day of the month following its approval by the authorized officer or the first day of the month following the expiration of the current lease, whichever is later, and shall otherwise be subject to the terms and conditions set forth under Subpart 3551 of this title.

§ 3551.3-2 Gilsonite (including all vein-type solid hydrocarbons).

(a) The lease shall be issued for 20 years and for so long thereafter as gilsonite (including all vein-type solid hydrocarbons) is produced in paying quantities subject to the Secretary's right of reasonable readjustment of lease terms and conditions at the end of each 20-year period.

(b) The terms and conditions of a gilsonite lease are subject to reasonable readjustment at the end of each 20-year period following the effective date of the lease unless otherwise provided by law at the time of expiration of such periods. Prior to the expiration of each 20-year period, the lessee shall be notified by the authorized officer at least 2 years prior to the expiration date of the lease as to whether the lease terms and conditions are to be readjusted. If the authorized officer fails to so notify the lessee, or if the proposed readjusted terms and conditions are not transmitted to the lessee before the end of the 2-year period prior to the 20-year anniversary date, the right to readjust the lease shall have been waived until the expiration of the next 20-year term. The lessee shall be deemed to have agreed to the readjusted terms and conditions unless, within 60 days after receiving them, the lessee files an objection thereto, or relinquishes the lease. If objections are filed timely, but a mutual agreement between the lessee and the authorized officer cannot be reached, the authorized officer shall issue a formal decision of readjustment which the lessee may appeal in accordance with part 4 of this title.

§ 3551.4 Bonds.

Prior to issuance of a lease under this part, the applicant shall be required to furnish a bond in an amount to be determined by the authorized officer, but not less than $5,000. (See Subpart 3504)

§ 3551.5 Special stipulations.

To insure adequate utilization and protection of the lands and their resources, leases shall contain such stipulations as may be prescribed by the authorized officer or the responsible official of the surface management agency if the surface is not under Bureau jurisdiction as described in § 3500.9 of this title. (See also Part 3570)

§ 3551.6 Other applicable regulations.

Leases issued under this part shall also be subject to the conditions set forth in other regulations including, but not limited to, the following:

(a) Minimum annual production and minimum royalty are covered in § 3503.2-2 of this title.

(b) Suspension of operations and production or suspension of operations are covered by § 3503.3 of this title.

(c) Assignments and subleases are covered by Subpart 3506 of this title.

(d) Cancellation and relinquishment are covered by Subpart 3509 of this title.

(e) Exploration and mining are covered by Part 3580 of this title.

(f) Royalty management is covered by 30 CFR Chapter II, Subchapter A.

Subpart 3553—Exploration License

§ 3553.0-3 Authority.

Section 302(b) of the Federal Land Policy and Management Act of 1976 (43 U.S.C. 1732(b)).

§ 3553.1 Exploration license.

Private parties, jointly or severally, may apply for exploration licenses to explore for unleased asphalt on available lands in Oklahoma and to explore known unleased gilsonite (including all vein-type solid hydrocarbons) deposits to obtain geologic, environmental and other pertinent data concerning such deposits.

§ 3553.2 Regulations applicable.

Except as otherwise specifically provided in this subpart, the regulations pertaining to land use authorizations under Part 2920 of this title shall govern the issuance of exploration licenses.

§ 3553.3 Exploration plan.

All applications for exploration licenses shall include an exploration plan which is in full compliance with § 3512.3-3 of this title. The exploration plan, as approved, shall be attached to, and made a part of, the license.

§ 3553.4 Notice of exploration.

Applicants for exploration licenses shall be required to publish a Notice of Exploration inviting other parties to participate in exploration under the license on a pro rata cost sharing basis.

§ 3553.4-1 Contents of notice.

The Notice of Exploration prepared by the authorized officer and furnished to the applicant shall contain:

(a) The name and address of the applicant;

(b) A description of the lands;

(c) The address of the Bureau office where the exploration plan shall be available for inspection; and

(d) An invitation to the public to participate in the exploration under the license.

§ 3553.4-2 Publication and posting of notice.

(a) The applicant shall publish the notice once a week for 3 consecutive weeks in at least 1 newspaper of general circulation in the area where the lands are located.

(b) The authorized officer shall post the notice in the proper BLM office for 30 days.

§ 3553.4-3 Notice of participation.

Any person who seeks to participate in the exploration program shall notify the authorized officer and the applicant in writing within 30 days after posting.

§ 3553.4-4 Decision on plan and participation.

The authorized officer may issue the license naming participants and acreage covered, establishing core hole spacing and resolving any other issue necessary to minimize surface disturbance and inconsistencies between proposed exploration plans.

§ 3553.5 Submission of data.

The licensee shall furnish the authorized officer copies of all data obtained during exploration. All data shall be considered confidential and not made public until either the areas involved have been leased or until the authorized officer determines that public access to the data would not damage the

competitive position of the licensee, whichever is first.

§ 3553.6 Modification of exploration plan.

Upon application, a modification of the exploration plan may be approved by the authorized officer.

Subpart 3554—Competitive Leasing

§ 3554.1 Lease by competitive bidding.

Leases may be offered competitively under this part without regard to the quantity or quality of the mineral deposit that may be present therein. A competitive lease sale may be initiated either through an expression of interest or on Bureau motion.

§ 3554.2 Surface management agency.

Prior to competitive lease offering, the surface management agency, if other than the Bureau, shall be consulted in accordance with § 3500.9 and Part 3570 of this title, as applicable.

§ 3554.3 Sale procedures.

§ 3554.3-1 Publication and posting of notice.

Prior to a lease offering, the authorized officer shall publish a notice of lease sale for at least 3 consecutive weeks in a newspaper of general circulation in the area in which the lands are situated. The notice of lease sale shall be posted for 30 days in the public room of the proper BLM office.

§ 3554.3-2 Contents of notice.

The lease sale notice shall include:

(a) The time and place of sale;

(b) The bidding method;

(c) A description of the tract being offered;

(d) A description of the deposit being offered, to the extent available;

(e) The minimum bid to be considered; and

(f) Information on where a detailed statement of the terms and conditions of the lease sale and of the proposed lease may be obtained.

§ 3554.3-3 Detailed statement.

The authorized officer shall also prepare and make available a detailed statement of sale containing:

(a) The lease form approved by the Director with terms and conditions, including the rental, royalty rates, bond amount and special stipulations;

(b) An explanation of the manner in which bids may be submitted;

(c) A notice that each bid shall be accompanied by the bidder's qualifications (See Subpart 3502) and one-fifth of the amount bid;

(d) A notice that the successful bidder(s) shall be required, prior to lease issuance, to pay their proportionate share of the total cost of the publication of the sale notice;

(e) A warning to all bidders concerning 18 U.S.C. 1860 which prohibits unlawful combination or intimidation of bidders;

(f) A statement that the Secretary reserves the right to reject any and all bids, and the right to offer the lease to the next qualified bidder if the successful bidder fails to obtain the lease for any reason; and

(g) Any other information deemed appropriate.

§ 3554.4 Bid opening.

All bids shall be opened and announced at the time and date specified in the notice of lease sale, but no bids shall be accepted or rejected at that time. Bids received after the time specified in the notice of sale shall not be considered. A bid may be withdrawn or modified prior to the time specified in the notice of sale.

§ 3554.5 Award of lease.

After the authorized officer has determined that the highest qualified bid meets or exceeds fair market value, copies of the lease on the form attached to the detailed statement shall be sent to the successful bidder who shall, within a specified time, sign and return the lease form, pay the balance of the bonus bid, pay the first year's rental, pay the publication costs and furnish the required lease bond.

§ 3554.6 Rejection of bid.

(a) If the high bid is rejected for failure of the successful bidder to sign the lease form and pay the balance of the bonus bid, or otherwise comply with the regulations of this subpart, the one-fifth bonus accompanying the bid shall be forfeited to the United States.

(b) If the lease cannot be awarded for reasons determined by the authorized officer to be beyond the control of the successful bidder, the authorized officer shall reject the bid and the deposit subitted with the bid shall be returned.

Subpart 3555—Noncompetitive Leasing—Fringe Acreage Leases and Lease Modifications

§ 3555.1 Lands subject to lease.

Lands available for leasing which are known to contain an asphalt or gilsonite deposit that extends from an adjoining Federal lease or from privately held lands may be leased noncompetitively either by issuance of a new lease for the lands or by adding such lands to an existing Federal lease.

§ 3555.2 Special requirements.

Before a fringe acreage lease may be issued or a lease modified under this subpart, the authorized officer shall determine the following:

(a) That the lands are contiguous to an existing Federal lease or to non-Federal lands owned or controlled by the applicant;

(b)(1) The new lease for the fringe acreage is not in excess of 5,120 acres for gilsonite or 2,560 acres for asphalt; or

(2) The acreage of the existing lease and the additional lands is not in excess of 5,210 acres for gilsonite or 2,560 acres for asphalt.

(c) That the mineral deposit is not in an area of competitive interest to holders of other active mining units in the area;

(d) That the lands applied for lack sufficient reserves of the mineral resource to warrant independent development; and,

(e) That leasing the lands will result in conservation of natural resources and will provide for economical and efficient recovery as part of a mining unit.

§ 3555.3 Filing requirements.

(a) An application shall be filed in triplicate with the proper BLM office. No specific form is required.

(b)(1) An asphalt lease application shall be accompanied by a nonrefundable filing fee of $25, and an advance rental payment of 25 cents per acre or fraction thereof for a new lease or at the rate set forth in the base lease for a modification made payable to the Department of the Interior—Bureau of Land Management.

(2) A gilsonite lease application shall be accompanied by a nonrefundable filing fee of $25 and an advance rental payment of 50 cent per acre of fraction thereof for a new lease or at the rate set forth in the base lease for a modification made payable to the Department of the Interior—Bureau of Land Management.

(c) The application shall:

(1) Make reference to the serial number of the lease if the lands adjoin an existing Federal lease;

(2) Contain a complete and accurate description of the lands desired;

(3) Include a showing that a gilsonite or asphalt deposit extends from the applicant's adjoining lease or from private lands owned or controlled by the applicant; and

(4) Include proof of ownership or control of the mineral deposit in the adjoining lands if not under a Federal lease.

§ 3555.4 Surface management agency.

The surface management agency, if other than the Bureau, shall be consulted in accordance with § 3500.9 and Part 3570 of this title, as applicable.

§ 3555.5 Payment of bonus.

Prior to the issuance of a new lease or a modification of an existing lease, the applicant shall be required to pay a bonus in an amount determined by the authorized officer based on an appraisal, but in no event shall such payment be less than $1 per acre or fraction thereof.

§ 3555.6 Terms and conditions of lease.

The terms and conditions of a modified lease shall be the same as the existing lease. A new lease shall be issued subject to the terms and conditions set forth under Subpart 3551 of this title.

PART 3560—HARDROCK MINERALS

Subpart 3560—Hardrock Minerals Leasing—General

Sec.

Subpart 3561—Lease Terms and Conditions

Subpart 3562—Hardrock Minerals Prospecting Permits

Subpart 3563—Preference Right Lease

Subpart 3564—Competitive Leasing

Subpart 3565—Noncompetitive Leasing—Fringe Acreage Leases and Lease Modifications

Subpart 3566—Lease Renewals

Subpart 3567—Development Contracts

Subpart 3560—Hardrock Minerals Leasing—General

§ 3560.0-3 Authorities.

Authorities for leasing hardrock minerals are shown under § 3500.0-3 of this title.

§ 3560.1 Leasing procedures.

The regulations in this part provide the procedures for qualified entities to obtain rights to develop deposits of hardrock minerals found on certain lands available for leasing. The regulations provide for this in the following manner:

(a) "Prospecting permits" allow the permittee to explore for deposits of hardrock minerals.

(b) "Preference right leases" are issued to holders of prospecting permits who demonstrate the discovery of a valuable deposit of a hardrock mineral(s) under the permit.

(c) "Competitive leases" are issued for known deposits of hardrock minerals and allow the lessee to mine the deposit.

(d) "Fringe acreage leases" are issued noncompetitively for known deposits of hardrock minerals adjacent to existing mines on non-Federal lands which can only be mined as part of the existing mining operation.

(e) "Lease modifications" are used to add known deposits of hardrock minerals to an adjacent Federal lease which contains an existing mine provided the deposits can only be mined as part of the existing mining operation.

§ 3560.2 Other applicable regulations.

§ 3560.2-1 General leasing regulations.

Part 3500 of this title contains the general regulations governing the leasing of solid minerals other than coal and oil shale and supplements, as applicable, the regulations in this part. The Part 3500 regulations include, but are not limited to, such matters as multiple mineral development, environmental review, other agency consent and consultation and lands not available for leasing. Cross-reference to specific regulations in Part 3500 is provided in this part as an aid to the reader and is not intended to limit the applicability of Part 3500 only to the cross-referenced regulations.

§ 3560.2-2 Special areas.

Part 3570 of this title contains regulations specific to certain national recreation areas and to certain lands patented to the State of California, and as applicable, supplements this part. Except where specific regulations in Part 3570 of this title are applicable, the regulations in this part and Part 3500 shall govern the leasing of hardrock minerals in those national recreation areas and those patented lands.

§ 3560.3 Lands subject to lease.

§ 3560.3-1 Department of Agriculture lands.

With the consent of the Secretary of Agriculture and subject to such conditions as he/she may prescribe, the hardrock minerals in the following lands administered by the Secretary of Agriculture are subject to lease:

(a) Lands acquired pursuant to: (1) The Act of March 4, 1917, granting authority to mine lands acquired under the Weeks Act (16 U.S.C. 520); (2) Title II of the National Industrial Recovery Act

of June 16, 1933 (40 U.S.C. 401, 403(a) and 408); (3) The 1935 Emergency Relief Appropriation Act of April 8, 1935 (49 Stat. 115, 118); (4) Section 55 of Title I of the Act of August 24, 1935 (49 Stat. 750, 781); and, (5) The Act of July 22, 1937 (50 Stat. 522, 525, 530), as amended by the Act of July 28, 1942 (7 U.S.C. 1011(c) and 1018).

(b) Lands added to the Shasta National Forest by the Act of March 19, 1948 (62 Stat. 83).

(c) Portions of Juan Jose Lobato Grant (North Lobato) and of the Anton Chica Grant (El Pueblo) in New Mexico (66 Stat. 285) described in section 1 of the Act of June 28, 1952.

(d) Public domain lands within National Forest lands in Minnesota.

(e) Lands in Shasta and Trinity Units of the Whiskeytown-Shasta-Trinity National Recreation Area, subject to the regulations in Subpart 3573 of this title.

§ 3560.3-2 National Park Service Recreation areas.

With the consent of the Regional Director, National Park Service, and subject to such conditions as may be prescribed by the Regional Director, the following national recreation areas administered by the National Park Service are available for leasing subject to the regulations in Subpart 3572 of this title:

(a) Lake Mead National Recreation Area;

(b) Whiskeytown Unit of the Whiskeytown-Shasta-Trinity National Recreation Area;

(c) Ross Lake and Lake Chelan National Recreation Areas; and

(d) Glen Canyon National Recreation Area.

§ 3560.3-3 White Mountains National Recreation Area.

The lands within White Mountains National Recreation Area are available for lease subject to the regulations in Subpart 3575 of this title.

§ 3560.3-4 Lands patented to the State of California for park purposes.

The reserved hardrock minerals in certain lands patented to the State of California are available for lease subject to the regulations in subpart 3574 of this title.

§ 3560.4 Allowable acreage holdings.

No person, company, association or corporation may hold at any particular time, directly or indirectly, more than 20,480 acres under prospecting permit and lease for a particular hardrock mineral or an associated group of hardrock minerals, of which not more than 10,240 acres may be held under lease. However, the authorized officer may authorize a lessee to hold an additional 10,240 acres under lease if he/she finds, upon a satisfactory showing submitted by the lessee, that such additional acreage is necessary to promote the orderly development of the mineral resource, and does not result in undue control of the mineral to be mined, removed and marketed. In any case, the aggregate chargeable acreage held under permit and lease shall not exceed 20,480 acres.

§ 3560.5 Identity of mineral or minerals required.

All applications under this section shall specify the mineral or minerals for which the lease or permit is sought. A permit, if granted, shall be for the mineral or minerals requested and any associated minerals. A preference right lease shall be issued for the mineral(s) specified in the permit for which a valuable deposit has been discovered and for any associated minerals. (See also Subpart 3563 and 3565)

§ 3560.6 Multiple development.

The granting of a hardrock permit or lease for the prospecting, development, or production of deposits for a specific mineral shall not preclude the issuance of other permits or leases for the same lands for deposits of other minerals with suitable stipulations for simultaneous operation. It is recognized, however, that multiple permits or leases for solid hardrock minerals on the same lands would not be compatible in most cases. For this reason, multiple permits or leases for such minerals generally shall not be issued for the same lands.

§ 3560.7 Hardrock mineral specimen collection.

Hardrock mineral specimens may be collected for non-commercial purposes (e.g., recreation, hobby collecting, scientific or research specimens, etc.), on Federal lands, the surface of which is not administered by the Bureau of Land Management. The appropriate surface management agency shall determine which areas and under what conditions such specimen collection may be conducted and whether an approved permit shall be necessary prior to the collector's entry on the lands. If such a permit is necessary, it shall be obtained from the responsible official of the surface management agency who shall have the discretionary authority to issue the permit, determine the permit fee, if any, and specify the terms and conditions of the permit.

Subpart 3561—Lease Terms and Conditions

§ 3561.1 Applicability of lease terms and conditions.

The lease terms and conditions set out under this section apply to all leases issued or renewed under Part 3560 of this title. Each lease shall be issued on a form approved by the Director and shall be dated as of the first day of the month after its approval by the authorized officer unless the applicant requests in writing that it be dated the first day of the month in which it is approved. Each lease shall authorize in accordance with its terms and conditions the mining of the hardrock mineral(s) for which the lease issued, including any associated minerals.

§ 3561.2 Rental and royalty.

§ 3561.2-1 Rental.

(a) Each lease shall provide for the payment of rental at the rate of $1 per acre or fraction thereof each year on or before the anniversary date of the lease. The rental payment shall not be less than $20. The rental paid for any year shall be credited against any royalties which may accrue under the lease during the year for which the rental was paid.

(b) If the annual rental is not timely remitted, the lessee shall be notified by the authorized officer that, unless payment is made within 30 days from receipt of such notification, action shall be taken to cancel the lease. (See § 3509.4-2)

(c) Remittances of rental shall be made in accordance with § 3503.1 of this title.

§ 3561.2-2 Production royalty.

The production royalty shall be determined by the authorized officer on a case-by-case basis as provided in § 3503.2-1 of this title. If hardrock minerals other than those specified in the issued lease should be discovered and mined by the lessee, an applicable royalty rate shall be established by the authorized officer for such mineral(s).

§ 3561.3 Duration of lease.

The lease shall be issued for a period not exceeding 20 years as determined by the authorized officer with a preference right in the lessee to renew at the end of the initial term and at the end of each 10-year period thereafter.

§ 3561.4 Bonds.

Prior to issuance of a lease under this part, the applicant shall furnish a bond in an amount to be determined by the

authorized officer but not less than $5,000. (See Subpart 3504)

§ 3561.5 Special stipulations.

To insure adequate utilization and protection of the lands and their resources, leases shall contain such stipulations as may be prescribed by the authorized officer of the responsible official of the surface management agency if the surface is not under Bureau jurisdiction as described in §3500.9 of this title. (See also Part 3570)

§ 3561.6 Other applicable regulations.

Leases issued under this part shall also be subject to the conditions set forth in other regulations, including, but not limited to, the following:

(a) Minimum annual production and minimum royalty are covered by §3503.2-2 of this title.

(b) Suspension of operations and production and suspension of operations are covered by § 3503.3 of this title.

(c) Assignments and subleases are covered by Subpart 3506 of this title.

(d) Cancellation and relinquishment are covered by Part 3509 of this title.

(e) Exploration and mining are covered by Part 3580 of this title.

(f) Royalty management is covered by 30 CFR Chapter II, Subchapter A.

Subpart 3562—Hardrock Minerals Prospecting Permits

§ 3562.1 Areas subject to prospecting.

A prospecting permit may be issued for any area of open and available Federal lands subject to hardrock mineral leasing where prospecting or exploratory work is necessary to determine the existence or workability of a particular hardrock mineral(s). Discovery of a valuable deposit of any such mineral(s) within the terms of the permit entitles the permittee to a preference right lease.

§ 3562.2 Rights conferred by issuance of prospecting permits.

A permit shall grant the permittee the exclusive right to prospect on and explore the lands to determine the existence of a valuable deposit of the mineral(s) for which the permit was issued. The permittee may remove only such material as is necessary to demonstrate the existence of a valuable mineral deposit.

§ 3562.3 Application for prospecting permit.

§ 3562.3-1 Filing requirements.

(a) An application shall be filed on a form approved by the Director or an exact reproduction of that form.

(b) An application shall be filed in triplicate with the proper BLM office.

(c) The application shall be accompanied by a nonrefundable filing fee of $25, and rental for the first year at the rate of 50 cents per acre or fraction thereof made payable to the Department of the Interior-Bureau of Land Management. The rental payment shall be for the total acreage if known, and if not known, for the total acreage computed on the basis of 40 acres for each smallest subdivision. The rental payment shall not be less than $20.

§ 3562.3-2 Contents of applications.

Each application shall be typewritten, or printed plainly in ink; manually signed in ink and dated by the applicant or applicant's duly authorized attorney-in-fact, and shall contain the following:

(a) The name and address of the applicant;

(b) A statement of the applicant's holdings in accordance with Subpart 3502 of this title;

(c) A complete and accurate land description in compliance with subpart 3501 of this title. The application shall not include more than 2,560 acres in a reasonably compact form; and

(d) The name of mineral(s) for which the permit is sought. (See § 3560.5)

§ 3562.3-3 Exploration plans.

An exploration plan in triplicate, reasonably designed to determine the existence and workability of the deposit, shall accompany the application and shall include the following:

(a) The names, addresses and telephone numbers of persons responsible for operations under the plan and to whom notices and orders are to be delivered;

(b) A brief description, including maps, of geologic, water, vegetation, and other physical factors, and the distribution, abundance and habitat of fish and wildlife, particularly threatened and endangered species, that may be affected by the proposed operation within the area where exploration is to be conducted, and the present land use within and adjacent to the area;

(c) A narrative description showing:

(1) The method of exploration and types of equipment to be used;

(2) The measures to be taken to prevent or control fire, soil erosion, pollution of surface and ground water, pollution of air, damage to fish and wildlife or their habitat and other natural resources, and hazards to public health and safety, including specific actions necessary to meet all applicable laws and regulations;

(3) The method for plugging drill holes; and

(4) The measures to be taken for surface reclamation, which shall include as appropriate:

(i) A reclamation schedule;

(ii) The method of grading, backfilling, soil stabilization, compacting and contouring;

(iii) The method of soil preparation and fertilizer application;

(iv) The type and mixture of shrubs, trees, grasses, forbs and other vegetation to be planted; and

(v) The method of planting, including approximate quantity and spacing;

(d) The estimated timetable for each phase of the work and for final completion of the program;

(e) Suitable topographic maps or aerial photographs showing existing bodies of surface water, topographic, cultural and drainage features, and the proposed locations of drill holes, trenches and roads; and

(f) Such other data as may be required by the authorized officer.

§ 3562.3-4 Rejection of application.

Any application for a prospecting permit that does not comply with the requirements of this subpart shall be rejected. If the applicant files a new application for the same lands within 30 days of receipt of the rejection, the nonrefundable filing fee and rental payment submitted with the original application shall be applied to the new application, provided the serial number of the original application is shown on the new application. If a new application is not filed within the 30-day period, the advance rental shall be refunded. Priority for the permit shall be established as of the date the corrected application is filed.

§ 3562.4 Determination of priorities.

§ 3562.4-1 Regular filings.

Priority of application shall be determined in accordance with the time of filing.

§ 3562.4-2 Simultaneous filings.

Where more than 1 application is filed at the same time for the same lands and for the same mineral, priority shall be determined in accordance with Subpart 1821 of this title.

§ 3562.5 Amendment of application.

An amendment to an application for a prospecting permit to include additional lands shall receive priority for such additional lands from the date of the filing of the amended application. The amended application shall be accompanied by the required advance rental. No additional filing fees are required.

§ 3562.6 Withdrawal of application.

An application for permit may be withdrawn in whole or in part before the permit is signed on behalf of the United States. Upon acceptance of the withdrawal by the authorized officer, the advance rental submitted with the application shall be refunded.

§ 3562.7 Permit bonds.

Prior to issuance of the permit, the applicant shall furnish a bond in an amount determined by the authorized officer, but not less than $1,000. (See Subpart 3504)

§ 3562.8 Terms and conditions of permit.

§ 3562.8-1 Duration of permit.

Prospecting permits are issued for an initial term of 2 years, and may be extended for a period not to exceed 4 years as provided in § 3562.9 of this title. No exploration activities shall be conducted following expiration of the initial term unless and until the permit has been extended by the authorized officer.

§ 3562.8-2 Dating of permits.

The permit shall be dated as of the first day of the month after its approval by the authorized officer unless the applicant requests in writing that it be dated the first day of the month in which it is approved.

§ 3562.8-3 Annual rental.

Rental at the rate of 50 cents per acre or fraction thereof shall be paid annually on or before the anniversary date of the permit. the rental payment shall not be less than $20.

§ 3562.8-4 Special stipulations.

To insure adequate protection of the lands and their resources, permits shall contain such stipulations as may be prescribed by the authorized officer or the surface management agency if the surface is not under Bureau jurisdiction as described in § 3500.9. (See also Part 3570)

§ 3562.9 Prospecting permit extensions.

§ 3562.9-1 Conditions for, and duration of, extensions.

A permit may be extended for a maximum of 4 years by the authorized officer provided that:

(a) The permittee has been unable with reasonable diligence to determine the existence or workability of valuable deposits of any mineral(s) coverd by the permit and desires to continue the prospecting or exploration program. Reasonable diligence means that in the opinion of the authorized officer the permittee has drilled a sufficient number of core holes on the permit area or performed other comparable prospecting to explore the permit area within the time allowed; or

(b) The permittee's failure to perform diligent prospecting activities was due to conditions beyond his/her control.

§ 3562.9-2 Application for extension.

(a)(1) An application for extension shall be filed in the proper BLM office at least 90 days prior to expiration of the permit. No specific application form is required.

(2) Applications for extension shall be accompanied by a nonrefundable filing fee of $25 and the first year's rental of 50 cents pre acre or fraction thereof made payable to the Department of the Interior—Bureau of Land Management. The rental payment shall not be less than $20.

(b) The application for extension shall:

(1) Demonstrate that the permittee has met the conditions for extension set forth in § 3562.9-1 of this title;

(2) Demonstrate the permittee's diligent prospecting activities; and

(3) Show how much additional time is necessary to complete prospecting work.

§ 3562.9-3 Effective date.

The permit extension shall become effective as of the date of approval.

Subpart 3563—Preference Right Lease

§ 3563.1 Application for preference right lease.

§ 3563.1-1 Filing requirements.

(a) An application shall be filed in triplicate with the proper BLM office no later than 60 days after the prospecting permit expires. No specific form is required.

(b) The application shall be accompanied by the first year's rental at the rate of $1 per acre or fraction thereof made payable to the Department of the Interior—Bureau of Land Management. The rental payment shall not be less than $20. (See Subpart 3503)

§ 3563.1-2 Contents of application.

(a) The application shall include a statement of the applicant's holdings in accordance with Subpart 3505 of this title.

(b) The application shall contain a complete and accurate description of the lands in accordance with § 3501.1 of this title. The lands shall have been included in the prospecting permit and shall not exceed 2,560 acres.

(c) The application shall identify the mineral(s) of which a valuable deposit(s) was discovered.

(d) The application shall be accompanied by a map(s) which shows utility systems; the location of any proposed development or mining operations and facilities incidental thereto, including the approximate locations and extent of the areas to be used for pits, overburden and tailings; and the location of water sources or other resources which may be used in the proposed operations or facilities incidental thereto.

(e) The application shall include a narrative statement setting forth:

(1) The anticipated scope, method and schedule of development operations, including the types of equipment to be used;

(2) The method of mining anticipated, including the best available estimate of the mining sequence and production rate to be followed; and

(3) The relationship, if any, between the mining operations anticipated on the lands applied for and existing or planned mining operations, or facilities incidental thereto, on adjacent Federal or non-Federal lands.

§ 3563.2 Review of application.

§ 3563.2-1 Preference right determination.

The authorized officer shall determine whether the permittee has discovered a valuable deposit of any mineral covered by the prospecting permit. The determination shall be based on data furnished the authorized officer by the permittee as required by Part 3580 of this title during the life of the permit and supplemental data submitted at the request of the authorized officer to determine the extent and character of the deposit, the anticipated mining and processing methods, the anticipated location, kind and extent of necessary surface disturbance and measures to be taken to reclaim that disturbance.

§ 3563.2 Surface management agency.

The surface management agency, if other than the Bureau, shall review the application for preference right lease in accordance with § 3500.9 and Part 3570 of this title, as applicable. The appropriate surface management agency may request supplemental data regarding surface disturbance and reclamation if not otherwise submitted under § 3563.1-1 of this title.

§ 3563.3 Issuance of lease.

The authorized officer shall issue a lease to the holder of a prospecting permit who shows that, within the terms of the permit, a valuable deposit of any mineral(s) covered by the prospecting permit was discovered.

§ 3563.4 Rejection of application.

(a) The authorized officer shall reject an application for a preference right lease if the authorized officer determines:

(1) That the applicant did not discover a valuable deposit of any mineral covered by the prospecting permit;

(2) The applicant did not submit in a timely manner requested information; or

(3) The applicant did not otherwise comply with the requirements of this subpart.

(b) On alleging in an application facts the applicant believes to be sufficient to show entitlement to a lease, a permittee shall have a right to a hearing before an Administrative Law Judge in the Office of Hearings and Appeals.

(c) At the hearing, the permittee shall have both the burden of going forward and the burden of proof by a preponderance of the evidence that a valuable deposit of the mineral(s) was discovered.

Subpart 3564—Competitive Leasing

§ 3564.1 Lands subject only to competitive leasing.

Lands where prospecting or exploratory work is unnecessary to determine the existence or workability of a particular hardrock mineral deposit may only be leased through competitive sale to the qualified bidder who offers the highest acceptable bonus bid. A competitive lease sale may be initiated either through an expression of interest or on Bureau motion.

§ 3564.2 Surface management agency.

Prior to competitive lease offering, the surface management agency, if other than the Bureau, shall be consulted in accordance with § 3500.9 and Part 3570 of this title, as applicable. (See also § 3560.3)

§ 3564.3 Sale procedures.

§ 3564.3-1 Publication and posting of notice.

Prior to a lease offering, the authorized officer shall publish a notice of lease sale for at least 3 consecutive weeks in a newspaper of general circulation in the area in which the lands are situated. The notice of lease sale shall be posted for 30 days in the public room of the proper BLM office.

§ 3564.3-2 Contents of notice.

The lease sale notice shall include:

(a) The time and place of sale;

(b) The bidding method;

(c) A description of the tract being offered;

(d) A description of the mineral deposit being offered;

(e) The minimum bid to be considered; and

(f) Information on where a detailed statement of the terms and conditions of the lease sale and of the proposed lease may be obtained.

§ 3564.3-3 Detailed statement.

The authorized officer shall also prepare and make available a detailed statement of sale containing:

(a) The lease form approved by the Director with terms and conditions, including the rental, royalty rates, bond amount and special stipulations;

(b) An explanation of the manner in which bids may be submitted;

(c) A notice that each bid shall be accompanied by the bidder's statement of holdings (See Subpart 3502) and one-fifth of the amount bid;

(d) A notice that the successful bidder(s) shall be required, prior to lease issuance, to pay its proportionate share of the total cost of the publication of the sale notice;

(e) A warning to all bidders concerning 18 U.S.C. 1860 which prohibits unlawful combination or intimidation of bidders;

(f) A statement that the Secretary reserves the right to reject any and all bids, and the right to offer the lease to the next qualified bidder if the successful bidder fails to obtain the lease for any reason; and

(g) Any other information deemed appropriate.

§ 3564.4 Bid opening.

All bids shall be opened and announced at the time and date specified in the notice of lease sale, but no bids shall be accepted or rejected at that time. Bids received after the time specified in the notice of sale shall not be considered. A bid may be withdrawn or modified prior to the time specified in the notice of sale.

§ 3564.5 Award of lease.

After the authorized officer has determined that the highest qualified bid meets or exceeds fair market value, copies of the lease on the form attached to the detailed statement shall be sent to the successful bidder who shall, within a specified time, sign and return the lease form, pay the balance of the bonus bid, pay the first year's rental, pay the publication costs and furnish the required lease bond.

§ 3564.6 Rejection of bid.

(a) If the high bid is rejected for failure of the successful bidder to sign the lease form and pay the balance of the bonus bid, or otherwise comply with the regulations of this subpart, the one-fifth bonus accompanying the bid shall be forfeited to the United States.

(b) If the lease cannot be awarded for reasons determined by the authorized officer to be beyond the control of the successful bidder, the authorized officer shall reject the bid and the deposit submitted with the bid shall be returned.

Subpart 3565—Noncompetitive Leasing—Fringe Acreage Leases and Lease Modifications

§ 3565.1 Lands subject to lease.

Lands available for leasing which are known to contain a hardrock mineral deposit that extends from an adjoining Federal lease or from privately held lands may be leased noncompetitively either by issuance of a new lease for these lands or by adding such lands to an existing Federal lease.

§ 3565.2 Special requirements.

Before a fringe acreage lease may be issued or a lease modified under this subpart, the authorized officer shall determine the following:

(a) The lands are contiguous to an existing Federal lease or to non-Federal lands owned or controlled by the applicant;

(b)(1) The new lease for fringe acreage is not in excess of 2,560 acres; or

(2) The acreage of the existing lease and the additional lands is not in excess of 2,560 acres;

(c) The mineral deposit is not in an area of competitive interest to holders of other active mining units in the area;

(d) The lands applied for lack sufficient reserves of the mineral resource to warrant independent development; and

(e) That leasing the lands will result in conservation of natural resources and will provide for economical and efficient recovery as part of a mining unit.

§ 3565.3 Filing requirements.

(a) An application shall be filed in triplicate with the proper BLM office. No specific application form is required.

(b) The application shall be accompanied by a nonrefundable filing fee of $25 and an advance rental payment of $1 per acre or fraction thereof for a new lease or at the rental rate set forth in the base lease for a modification made payable to the Department of the Interior—Bureau of Land Management. The rental payment shall not be less than $20.

(c) The application shall:

(1) Make reference to the serial number of the lease if the land adjoin an existing Federal lease;

(2) Contain a complete and accurate description of the land desired;

(3) Include a showing that a hardrock mineral deposit extends from the applicant's adjoining lease or from private lands owned or controlled by the applicant; and

(4) Include proof of ownership or control of the mineral deposit in the adjoining lands if not under a Federal lease.

§ 3565.4 Surface management agency.

The surface management agency shall be consulted in accordance with § 3500.9 and Part 3570 of this title, as applicable. (See also § 3560.3)

§ 3565.5 Payment of bonus.

Prior to the issuance of a new lease or a modification of an existing lease, the applicant shall be required to pay a bonus in an amount determined by the authorized officer based on an appraisal. In no event shall such payment be less than $1 per acre or fraction thereof.

§ 3565.6 Terms and conditions of lease.

New leases shall be issued subject to the terms and conditions set out under Subpart 3561 of this title. The terms and conditions of a modified lease shall be the same as the existing lease.

Subpart 3566—Lease Renewals

§ 3566.1 Applications.

An application for lease renewal shall be filed at least 1 year prior to the expiration of the lease term. No specific form is required. All applications shall be filed in triplicate in the proper BLM office together with a nonrefundable $25 filing fee and an advance rental payment of $1 per acre or fraction thereof. The rental payment shall not be less than $20.

§ 3566.2 Bonds.

Prior to the issuance of a renewal lease, the lessee may be required to furnish a new bond as prescribed by Subpart 3504 of this title.

§ 3566.3 Failure to apply for renewal.

If the holder of a lease fails to apply for renewal as provided in § 3566.1 of this title, the lease shall expire on the last day of the lease term.

§ 3566.4 Lease terms and conditions.

Each lease, if renewed, shall be issued on a form approved by the Director and shall be dated effective the first day of the month following its approval by the authorized officer or the first day of the month following the expiration of the current lease, whichever is later, and shall otherwise be subject to the terms and conditions set forth under Subpart 3561 of this title.

Subpart 3567—Development Contracts

§ 3567.1 Development contracts and processing and milling arrangements.

Development contracts and processing and milling arrangements by 1 or more lessees with 1 or more persons, associations or corporations to justify operations on a large scale for the discovery, development, production or transportation of ores may be approved by the authorized officer without regard to the acreage limitation set forth in §3560.4 of this title.

§ 3567.2 Acreage chargeability.

Leases and permits committed to an approved development contract or to a processing or milling arrangment shall not be included in computing accountable acreage.

§ 3567.3 Applications.

All applications shall be filed in triplicate in the proper BLM office. No specific form is required. An application shall include the following:

(a) Copies of the contract affecting the Federal leases and/or permits;

(b) A statement showing the nature and reasons for the requested contract;

(c) A statement showing all of the interests held in the contract area by the designated contractor; and

(d) The proposed or agreed upon plan of operation or development of the leased lands.

§ 3567.4 Approval.

Development contracts may be approved by the authorized officer when, in his/her judgment, conservation of natural resources or the public interest shall be best served thereby. The contract shall be signed and agreed upon by the parties prior to final approval by the Bureau.

PART 3570—SPECIAL LEASING AREAS

Subpart 3571—Gold and Silver in Confirmed Private Land Grants

Sec.

Subpart 3572—National Park Service Areas

Subpart 3573—Shasta and Trinity Units of the Whiskeytown-Shasta-Trinity National Recreation Area

Subpart 3574—Reserved Minerals in Lands Patented to the State of California for Park or Other Public Purposes

Subpart 3575—White Mountains National Recreation Area, Alaska

Subpart 3576—Nevada

Subpart 3571—Gold and Silver in Confirmed Private Land Grants

§ 3571.0–3 Authority.

Authority for leasing gold and silver in confirmed private land grants is shown in § 3500.0–3(c)(1) of this title.

§ 3571.1 Lands to which applicable.

The regulations in this subpart apply to lands in private land claims patented pursuant to decrees of the Court of Private Land Claims where the grant did not convey the rights to deposits of gold, silver and quicksilver and where the grantee has not otherwise become entitled in law or in equity to the deposits.

§ 3571.2 Who may obtain a lease.

Applications shall only be filed by, and leases issued to, the owner of the lands under the confirmed land grant; that is, the original grantee or his/her record transferee or successor in title.

§ 3571.3 Application for lease.

(a) Applications for leases shall be filed in triplicate in the proper BLM office and may include all or any part of the grant for which the applicant holds title on the date of the application. No specific form is required.

(b) Applications shall set forth the name and address of the applicant, describe the lands in which the deposits occur by legal subdivisions of the public surveys, if so surveyed; otherwise by metes and bounds; or if for the entire area in the grant, the name of the grant, area and date of patent shall suffice. The mineral deposits shall also be fully described, giving character, mode of occurrence, nature of the formation, kind and character of associated minerals, if any, proposed mining methods, estimate of amount of investment necessary to successful operation of the mine(s) contemplated, estimated amount of production of gold, silver and quicksilver, or any of them, and such other pertinent information as the applicant may desire to set forth, including what he/she considers a reasonable royalty rate under the lease.

(c) The applicant shall also file with his/her application a duly authenticated abstract of title showing present ownership of the lands or a certificate of the county recorder of deeds that the record title stands in the applicant's name.

§ 3571.4 Leases.

§ 3571.4-1 Lease terms.

The lease shall be issued for a period of 20 years with a perference right in the lessee to renew at the end of the initial terms and at the end of each 10 year period thereafter.

§ 3571.4-2 Rate of royalty; investment determined.

If the authorized officer finds the application sufficient to authorize issuance of a lease, then he/she shall establish a rate of royalty of not less than 5 percent of more than 12½ percent of the value of the output of gold, silver or quicksilver at the mine and also shall establish the amount of investment required under the lease.

§ 3571.4-3 Lease form and execution.

A lease on a form approved by the Director shall be furnished to the applicant, who shall be allowed 30 days from notice within which to execute and return the lease to the proper BLM office and to furnish the required bond.

§ 3571.5 Bond.

Prior to lease issuance, the lessee shall furnish a bond of not less than $2,000 conditioned upon compliance with all terms and conditions of the lease including the investment requirement prescribed. The authorized officer reserves the right to increase the bond amount.

Subpart 3572—National Park Service Areas

§ 3572.0-3 Authority.

Authority for leasing mineral deposits within certain national recreation areas administered by the National Park Service are found in § 3500.0-3(c)(3) of this title.

§ 3572.1 Other applicable regulations.

§ 3572.1-1 Leasable minerals.

Except as otherwise specifically provided in this subpart, leasing of deposits of leasable minerals shall be governed by regulations in Parts 3500, 3510, 3520, 3530, 3540 and 3550 of this title.

§ 3572.1-2 Hardrock minerals.

Except as otherwise specifically provided in this subpart, the regulations in Parts 3500 and 3560 of this title shall govern the leasing of hardrock minerals.

§ 3572.2 Lands to which applicable.

§ 3572.2-1 Boundary maps.

The area subject to the regulations in this subpart are those areas of land and water which are shown on the following maps on file and available for public inspection in the Office of the Director of the National Park Service and in the Superintendent's Office of each area. The boundaries of these areas may be revised by the Secretary as authorized in the Acts cited under § 3500.0-3(c)(3) of this title.

(a) Lake Mead National Recreation Area—The map identified as "boundary map, 8360-80013A, revised December 1979."

(b) Whiskeytown Unit of the Whiskeytown-Shasta-Trinity National Recreation Area—The map identified as "Proposed Whiskeytown-Shasta-Trinity National Recreation Area," numbered BOR-WEST 1004, dated July 1963.

(c) Ross Lake and Lake Chelan National Recreation Areas—The map identified as "Proposed Management Units, North Cascades, Washington," numbered NP-CAS-7002, dated October 1967.

(d) Glen Canyon National Recreation Area—The map identified as "Boundary Map, Glen Canyon National Recreation Area," numbered GLC-91,006, dated August 1972.

§ 3572.2-2 Excepted areas.

The following areas shall not be open to mineral leasing:

(a) *Lake Mead National Recreation Area.* (1) All waters of Lake Mead and Mohave and all lands within 300 feet of those lakes measured horizontally from the shoreline at maximum water surface elevations.

(2) All lands within the area of supervision of the Bureau of Reclamation around Hoover and Davis Dams and all lands within any developed and/or concentrated public use area or other area of outstanding recreational significance as designated by the Superintendent on the map (NRA-L.M. 2291A, dated July 1966) of Lake Mead National Recreation Area which is available for inspection in the Office of the Superintendent.

(b) *Whiskeytown Unit of the Whiskeytown-Shasta-Trinity National Recreation Area.* (1) All waters of Whiskeytown Lake and all lands within 1 mile of that lake measured from the shoreline at maximum surface elevation.

(2) All lands classified as high density recreation, general outdoor recreation, outstanding natural and historic, as shown on the map numbered 611-20, 004B, dated April 1976, entitled "Land Classification, Whiskeytown Unit, Whiskeytown-Shasta-Trinity National Recreation Area." This map is available for public inspection in the Office of the Superintendent.

(3) All lands within Section 34 of Township 33 north, Range 7 west, Mt. Diablo Meridian.

(c) *Ross Lake and Lake Chelan National Recreation Area.* (1) All of Lake Chelan National Recreation Area.

(2) All lands within ½ mile of Gorge, Diablo and Ross Lakes measured from the shoreline at maximum surface elevation.

(3) All lands proposed for or designated as wilderness.

(4) All lands within ½ mile of State Highway 20.

(5) Pyramid Lake Research Natural Area and all lands within ½ mile of its boundaries.

(d) *Glen Canyon National Recreation Area.* Those areas closed to mineral disposition within the natural zone, development zone, cultural zone and portions of the recreation and resource utilization zone as shown on the map numbered 80,022A, dated March 1980, entitled "Mineral Management Plan—Glen Canyon National Recreation Area." This map is available for public inspection in the Office of the Superintendent and the Offices of the State Directors, Bureau of Land Management, Arizona and Utah.

§ 3572.3 Consent and consultation.

Any lease or permit respecting minerals shall be issued or renewed only with the consent of the Regional Director, National Park Service. Such consent shall only be granted upon a determination by the Regional Director that the activity permitted under the lease or permit shall not have significant adverse effect upon the resources or administration of the area pursuant to the authorizing legislation for the area. Any lease or permit issued shall be subject to such conditions as may be prescribed by the Regional Director to protect the surface and significant resources of the area, to preserve their use for public recreation and subject to the condition that site specific approval of any activity on the lease shall only be given upon a concurrence by the Regional Director. All lease applications received for reclamation withdrawn lands shall also be submitted to the Bureau of Reclamation for review.

Subpart 3573—Shasta and Trinity Units of the Whiskeytown-Shasta-Trinity National Recreation Area

§ 3573.0-3 Authority.

Authority for leasing mineral deposits within the Shasta and Trinity Units of Whiskeytown-Shasta-Trinity National Recreation Area is cited under § 3500.0-3)c)(4) of this title.

§ 3573.1 Other applicable regulations.

The regulations in this subpart authorize issuance of mineral leases on lands administered by the Forest Service within the Shasta and Trinity Units of the Whiskeytown-Shasta-Trinity National Recreation Area.

§ 3573.1-1 Leasable minerals.

Except as otherwise specifically provided in § 3573.2 of this title, leasing of leasable mineral deposits shall be governed by the regulations in Parts 3500, 3510, 3520, 3530, 3540 and 3550 of this title.

§ 3573.1-2 Hardrock minerals.

This subpart governs the leasing of hardrock minerals in the Shasta and Trinity Units of the Whiskeytown-Shasta-Trinity National Recreation Area. The terms and conditions of hardrock leases issued under this subpart shall be the same as those set out for hardrock leases in Subpart 3561 of this title except as specifically modified in this subpart.

§ 3573.2 Consent of Secretary of Agriculture.

Any lease or permit respecting minerals in lands subject to this subpart shall be issued only with the consent of the Secretary of Agriculture and subject to such conditions as he/she may prescribe after he/she finds that such disposition would not have significant adverse effects on the purpose of the Central Valley Project or the administration of the recreation area.

§ 3573.3 Applications for hardrock mineral leases.

No specific form is required. An application shall include the applicant's name and address, a statement of holdings in accordance with Subpart 3502 of this title, a description of the lands in accordance with Subpart 3501 of this title, and the name of the mineral for which the lease is desired. The applicant shall state whether the mineral applied for can be developed in paying quantities, stating the reasons therefor, and shall furnish such facts as are available to him/her respecting the known occurrence of the mineral, the character of such occurrence and its probable value as evidencing the existence of a workable deposit of such mineral. Each application shall be filed in triplicate in the proper BLM office and shall be accompanied by a nonrefundable filing fee of $25.

§ 3573.4 Hardrock mineral leases.

§ 3573.4-1 Leasing units.

Leasing units may not exceed 640 acres consisting, if the lands are surveyed, of legal subdivisions in reasonably compact form or, if the lands are not surveyed, of a square or rectangular area with north and south and east and west boundaries so as to approximate legal subdivisions, described by metes and bounds and connected to a corner of the public survey by courses and distances. The authorized officer may prescribe a lesser area for any mineral deposit if such lesser area is adequate for an economic mining operation.

§ 3573.4-2 Royalties, rentals and minimum royalties.

Rentals and royalties shall be determined by the authorized officer on the basis of the fair market value, but in no event shall be less than:

(a) A rental of 50 cents per acre or fraction thereof payable annually in advance until production is obtained.

(b) A minimum royalty of 1 dollar per acre or fraction thereof payable annually in advance after production is obtained.

(c) A production royalty of 2 percent of the amount or value of the minerals mined, the exact amount of royalty to be fixed prior to the issuance of the lease.

§ 3573.4-3 Special terms and conditions.

Each lease shall contain provisions for the following:

(a) Diligent development of the leased property except when operations are interrupted by strikes, the elements or casualties not attributable to the lessee, unless operations are suspended upon a showing that the lease cannot be operated except at a loss because of unfavorable market conditions;

(b) Occupation and use of the surface shall be restricted to that which is reasonably necessary for the exploration, development and extraction of the leased minerals, subject to any special rules to protect the values of the recreation area;

(c) No vegetation shall be destroyed or disturbed except where necessary to mine and remove the minerals;

(d) Operations shall not be conducted in such a manner as to adversely affect the purpose of the Central Valley Project through dumping, drainage or otherwise;

(e) Structures shall not be erected or roads or vehicle trails opened or constructed without first obtaining written permission from an authorized officer or employee of the National Park Service. The permit for a road or trail may be conditioned upon the permittee's maintaining the road or trail in passable condition, satisfactory to the officer in charge of the area so long as it is used by the permittee or his/her successor;

(f) Reservation of the right to insert other terms in the lease when deemed necessary for the protection of the surface, its resources and use for recreation.

§ 3573.4-4 Duration of lease.

Leases shall be issued for a period of 5 years. Any lease in good standing, upon which production in paying quantities has been obtained, shall be subject to renewal for successive 5 years terms on such reasonable terms as may be prescribed by the Secretary. An

application for renewal shall be filed in triplicate in the proper BLM office within 90 days prior to the expiration of the current lease term unless the lands included in the lease have been withdrawn at the expiration of such term.

§ 3573.4-5 Lease by competitive bidding.

Leases may be offered competitively for any lands applied for under this subpart without regard to the quantity or quality of the mineral deposit that may be present therein.

§ 3573.5 Disposal of materials.

Materials within the public lands covered by the regulations in this subpart which are not subject to the provisions of §§ 3573.1-1 and 3573.1-2 of this title, shall be subject to disposal under the Act of July 31, 1947, as amended (30 U.S.C. 601 et seq.) subject to the conditions and limitations on occupancy and operations prescribed for leases in this subpart.

Subpart 3574—Reserved Minerals in Lands Patented to the State of California for Park or Other Public Purposes

§ 3574.0-3 Authorities.

Authority for leasing reserved minerals in certain lands patented to the State of California for park or other public purposes is cited under § 3500.0-3(c)(2) of this title.

§ 3574.1 Lands to which applicable.

The regulations in this subpart apply to certain lands patented to the State of California for park and other public purposes.

§ 3574.2 Minerals to be leased.

Leasable and hardrock minerals are subject to lease under this subpart.

§ 3574.3 Other applicable regulations.

Subject to the regulations in this subpart, the regulations in Parts 3500, 3510, 3520, 3530, 3540, 3550 and 3560 of this title shall govern the leasing of all leasable and hardrock minerals within the area.

§ 3574.4 Notice of application.

The authorized officer shall notify the surface owner of each application received. Notice of any proposed competitive lease offer shall also be given to the surface owner prior to publication. Should the surface owner object to the leasing of any tract for reasons determined by the authorized officer to be satisfactory, the application shall be rejected and the lands shall not be offered for lease sale.

§ 3574.5 Protection of surface.

All leases issued pursuant to this subpart shall be conditioned upon compliance by the lessee with all of the laws, rules and regulations of the State of California for the safeguarding and protection of plant life, scenic features and park or recreational improvements on the lands, where not inconsistent with the terms of the lease or this section. The lease shall also provide that any mining work performed upon the lease shall be located in accordance with any requirements of the State necessary for the protection of the surface rights and uses and so conducted as to result in the least possible injury to plant life, scenic features and improvements and that, upon completion of the mining operation, all excavations, including wells, shall be closed and the property shall be conditioned for abandonment to the satisfaction of the surface owner. The lease shall further provide that any use of the lands for ingress to and egress from the mine shall be on a route approved in writing by the State's authorized representative.

§ 3574.6 Terms of lease.

Leases for hardrock minerals shall issue for a period of 5 years with a perference right of renewal at the end of the initial term and at the end of each 5 year period thereafter. (See Subpart 3566)

Subpart 3575—White Mountains National Recreation Area—Alaska

§ 3575.0-3 Authority.

Authority for leasing minerals in White Mountains National Recreation Area—Alaska is found in § 3500.0-3(c)(5) of this title.

§ 3575.1 Lands to which applicable.

The lands subject to the regulations in this subpart are within the White Mountains National Recreation Area—Alaska, which have been opened to mineral leasing and development pursuant to the findings in the land use plan for the area that such use and development would be compatible with, or would not significantly impair, public recreation and conservation of the scenic, scientific, historic, fish and wildlife or other values contributing to public enjoyment. The land use plan is on file and available for inspection in the Bureau's Fairbanks District Office.

§ 3575.2 Other applicable regulations.

§ 3575.2-1 Leasable minerals.

Leasing of deposits of leasable minerals shall be governed by the applicable regulations in Parts 3500, 3510, 3520, 3530, 3540 and 3550 of this title.

§ 3575.2-2 Hardrock minerals.

Except as otherwise specifically provided in this subpart for mining claimant preference right leases, the regulations in Parts 3500 and 3560 of this title shall govern the leasing of hardrock minerals.

§ 3575.3 Mining claimant preference right leases.

§ 3575.3-1 Who may obtain a preference right lease.

Where, consistent with the land use plan, the Secretary has opened the area to mineral leasing and development, the holder of an unperfected mining claim within the White Mountains National Recreation Area which was, prior to November 16, 1978, located, recorded and maintained in accordance with applicable Federal and State laws on lands located within the recreation area, is entitled to a lease for the removal of the hardrock minerals from the mining claim(s), provided such mining claimant submits a timely application.

§ 3575.3-2 Application.

(a) An application for preference right lease shall be filed in triplicate in the Fairbanks District Office, P.O. Box 1150, Fairbanks, Alaska 99707, by the holder of an unperfected mining claim(s) within 2 years from the date the land use plan is approved.

(b) No specific form is required.

(c) Each application shall be signed in ink by the applicant and shall include the following:

(1) The applicant's name and address;

(2) The serial number of each claim for which the application is made;

(3) The name of the mineral(s) for which a lease is sought; and

(4) A separate map upon which the claim(s) is clearly marked.

(d) A single application may embrace any number of unperfected mining claims provided that, in the aggregate, the claims do not exceed 640 acres. The claims shall be contiguous and shall be located entirely within an area of 6 miles square. Multiple applications may be submitted.

§ 3575.4 Leases.

§ 3575.4-1 Survey for leasing.

Prior to the issuance of a lease under this subpart, the applicant, at his/her own expense, shall be required to have a correct survey made under authority of a proper cadastral engineer, such survey to show the exterior surface boundaries of the entire lease tract, not each individual mining claim where

more than 1 claim is involved, which boundaries are to be distinctly marked by monuments on the ground. Application for authorization of survey shall be made in accordance with Subpart 1821 of this title.

§ 3575.4-2 Terms and conditions.

Leases shall be issued on a form approved by the Director and under such terms and conditions as prescribed in the lease form and Subpart 3561 of this title. Where deemed necessary, special lease stipulations shall also be included for the protection of the surface, its resources and use for recreation.

§ 3575.4-3 Relinquishment of claims.

Prior to issuance of a lease, the applicant shall relinquish in writing any right or interest in his/her mining claim(s) as of the date the lease covering such claim(s) becomes effective.

§ 3575.5 Exploration license.

§ 3575.5-1 Exploration license.

Private parties, jointly or severally, may apply for exploration licenses to explore known unleased hardrock mineral deposits to obtain geologic, environmental and other pertinent data concerning such deposits. Exploration licenses do not grant the licensee any preference or right to a lease.

§ 3575.5-2 Other applicable regulations.

Except as otherwise specifically provided in this subpart, the regulations pertaining to land use authorizations under Part 2920 of this title shall govern the issuance of exploration licenses.

§ 3575.5-3 Exploration plan.

All applications for exploration licenses shall include an exploration plan which is in full compliance with § 3562.3-3 of this title. The approved exploration plan shall be attached to, and made a part of, the license.

§ 3575.5-4 Notice of exploration.

Applicants for exploration licenses shall publish a Notice of Exploration inviting other parties to participate in exploration under the license on a pro rata cost sharing basis.

§ 3575.5-5 Contents of notice.

The Notice of Exploration prepared by the authorized officer and furnished to the applicant shall contain:

(a) The name and address of the applicant;

(b) A description of the lands;

(c) The address of the Bureau office where the exploration plan shall be available for inspection; and

(d) An invitation to the public to participate in the exploration under the license.

§ 3575.5-6 Publication and posting of notice.

(a) The applicant shall publish the Notice of Exploration once a week for 3 consecutive weeks in at least 1 newspaper of general circulation nearest the area where the lands are located.

(b) The authorized officer shall post the notice in the Bureau's Alaska State Office and in the Fairbanks District Office for 30 days.

§ 3575.5-7 Notice of participation.

Any person who seeks to participate in the exploration program shall notify the authorized officer and the applicant in writing within 30 days after posting.

§ 3575.5-8 Decision on plan and participation.

(a) The authorized officer may issue the license naming participants and acreage covered, establishing core hole spacing and resolving any other issue necessary to minimize surface disturbance and inconsistencies between exploration plans.

(b) Upon application by the participant, a modification of the exploration plan may be approved by the authorized officer.

§ 3575.5-9 Submission of data.

The licensee shall furnish the authorized officer copies of all data obtained during exploration. All data shall be considered confidential and not made public either until the areas involved have been leased or until the authorized officer determines that public access to the data would not damage the competitive position of the licensee, whichever is first.

Subpart 3576—Nevada

§ 3576.1 Sand and gravel.

§ 3576.1-1 Applicable laws and regulations.

The Act of June 8, 1926 (44 Stat. 708), authorizes the Secretary of the Interior to dispose of the reserved minerals in certain lands patented to the State of Nevada under such conditions and under such rules and regulations as he/she may prescribe. Valuable deposits of sand and gravel in such lands shall be subject to disposal only under the regulations in Group 3600 of this title which implement the Materials Act of 1947, as amended (30 U.S.C. 601 et seq.).

§ 3576.1-2 Existing leases.

Existing sand and gravel leases may be renewed at the expiration of their term for an additional period of 5 years and each successive 5 year period thereafter on such terms and conditions as the authorized officer determines to be reasonable. An application for renewal shall be filed in triplicate in the proper BLM office within 90 days prior to the expiration of the lease term and be accompanied by a nonrefundable filing fee of $25. Prior to renewal of a lease, the lessee shall be required to file a new bond and remit rental for the first year of the renewal lease in the respective amounts prescribed by the authorized officer. The rental payment shall not be less than $20. Leases shall only be renewed upon application of the lessee of record on the effective date of this regulation. Leases may be transferred for the remaining term, but shall not be renewed.

J. Steven Griles,

Acting Assistant Secretary of the Interior.

February 1, 1985.

[FR Doc. 85-8710 Filed 4-11-85; 8:45 am]

BILLING CODE 4310-84-M

federal register

Friday
April 12, 1985

Part III

Department of Labor

Employment Standards Administration, Wage and Hour Division

Minimum Wages for Federal and Federally Assisted Construction; General Wage Determination Decisions; Notice

DEPARTMENT OF LABOR

Employment Standards Administration, Wage and Hour Division

Minimum Wages for Federal and Federally Assisted Construction; General Wage Determination Decisions

General wage determination decisions of the Secretary of Labor specify, in accordance with applicable law and on the basis of information available to the Department of Labor from its study of local wage conditions and from other sources, the basic hourly wage rates and fringe benefit payments which are determined to be prevailing for the described classes of laborers and mechanics employed on construction projects of the character and in the localities specified therein.

The determinations in these decisions of such prevailing rates and fringe benefits have been made by authority of the Secretary of Labor pursuant to the provisions of the Davis-Bacon Act of March 3, 1931, as amended (46 Stat. 1494, as amended 40 U.S.C. 276a) and of other Federal statutes referred to in 29 CFR 5.1 (including the statutes listed at 36 FR 306 (1970) following Secretary of Labor's Order No. 24–70) containing provisions for the payment of wages which are dependent upon determination by the Secretary of Labor under the Davis-Bacon Act; and pursuant to the provisions of Part 1 of Subtitle A of Title 29 of Code of Federal Regulations, Procedure for Predetermination of Wage Rates, 48 FR 19533 (1983) and of Secretary of Labor's Orders 9–83, 48 FR 35736 (1983), and 6–84, 49 FR 32473 (1984). The prevailing rates and fringe benefits determined in these decisions shall, in accordance with the provisions of the foregoing statutes, constitute the minimum wages payable on Federal and federally assisted construction projects to laborers and mechanics of the specified classes engaged on contract work of the character and in the localities described therein.

Good cause is hereby found for not utilizing notice and public procedure thereon prior to the issuance of these determinations as prescribed in 5 U.S.C. 553 and not providing for delay in the effective date as prescribed in that section, because the necessity to issue construction industry wage determination frequently and in large volume causes procedures to be impractical and contrary to the public interest.

General wage determination decisions are effective from their date of publication in the **Federal Register** without limitation as to time and are to be used in accordance with the provisions of 29 CFR Parts 1 and 5. Accordingly, the applicable decision together with any modifications issued subsequent to its publication date shall be made a part of every contract for performance of the described work within the geographic area indicated as required by an applicable Federal prevailing wage law and 29 CFR, Part 5. The wage rates contained therein shall be the minimum paid under such contract by contractors and subcontractors on the work.

Modifications and Supersedeas Decisions to General Wage Determination Decisions

Modifications and supersedeas decisions to general wage determination decisions are based upon information obtained concerning changes in prevailing hourly wage rates and fringe benefit payments since the decisions were issued.

The determinations of prevailing rates and fringe benefits made in the modifications and supersedeas decisions have been made by authority of the Secretary of Labor pursuant to the provisions of the Davis-Bacon Act of March 3, 1931, as amended (46 Stat. 1494, as amended, 40 U.S.C. 276a) and of other Federal statutes referred to in 29 CFR 5.1 (including the statutes listed at 36 FR 306 (1970) following Secretary of Labor's Order No. 24–70) containing provisions for the payment of wages which are dependent upon determination by the Secretary of Labor under the Davis-Bacon Act; and pursuant to the provisions of Part 1 of Subtitle A of Title 29 of Code of Federal Regulations, Procedure for Predetermination of Wage Rates, 48 FR 19533 (1983) and of Secretary of Labor's Order 6–84, 49 FR 32473 (1984). The prevailing rates and fringe benefits determined in foregoing general wage determination decisions, as hereby modified, and/or superseded shall, in accordance with the provisions of the foregoing statutes, constitute the minimum wages payable on Federal and federally assisted construction projects to laborers and mechanics of the specified classes engaged in contract work of the character and in the localities described therein.

Modifications and supersedeas decisions are effective from their date of publication in the **Federal Register** without limitation as to time and are to be used in accordance with the provisions of 29 CFR Parts 1 and 5.

Any person, organization, or governmental agency having an interest in the wages determined as prevailing is encouraged to submit wage rate information for consideration by the Department. Further information and self-explanatory forms for the purpose of submitting this data may be obtained by writing to the U.S. Department of Labor, Employment Standards Administration, Wage and Hour Division, Office of Program Operations, Division of Wage Determinations, Washington, D.C. 20210. The cause for not utilizing the rulemaking procedures prescribed in 5 U.S.C. 553 has been set forth in the original General Determination Decision.

Modifications to General Wage Determination Decisions

The numbers of the decisions being modified and their dates of publication in the **Federal Register** are listed with each State.

California: CA84-5022	Oct. 5, 1984.
Idaho: ID85-5010	Feb. 15, 1985.
Illinois:	
IL83-2037	Apr. 29, 1983.
IL85-5004	Jan. 18, 1985.
Massachusetts:	
MA85-3013	Mar. 15, 1985.
MA85-3014	Mar. 15, 1985.
MA85-3015	Mar. 15, 1985.
Ohio:	
OH83-5122	Nov. 25, 1983.
OH83-5127	Dec. 23, 1983.
Oregon: OR84-5020	June 22, 1984.
Pennsylvania:	
PA82-3011	Mar. 12, 1982.
PA84-3015	June 1, 1984.
PA84-3035	Sept. 21, 1984.
PA84-3037	Oct.5, 1984.
Texas:	
TX84-4036	May 25, 1984.
TX84-4037	May 25, 1984.
TX85-4001	Jan. 25, 1985.
TX84-4015	Mar. 16, 1984.
TX83-4075	Oct. 21, 1983.
Washington: WA84-5040	Nov. 16, 1984.

Supersedeas Decisions to General Wage Determination Decisions

The numbers of the decisions being superseded and their dates of publication in the **Federal Register** are listed with each State. Supersedeas decision numbers are in parentheses following the number of the decisions being superseded.

Colorado: CO83-5109(CO85-5021)	Apr. 8, 1983.
Missouri: MO84-4044(MO85-4005)	Aug. 3, 1984.
Nebraska: NE80-4100(NE85-4004	Dec. 12, 1980.

Signed at Washington, D.C.; this 5th Day of April 1985.

James L. Valin,

Assistant Administration.

BILLING CODE 4510-27-M

MODIFICATIONS P. 1

	Basic Hourly Rates	Fringe Benefits
DECISION NO. CA84-5022 - MOD. #7 (49 FR 39416 - October 5, 1984) Alameda, Alpine, Amador Counties, etc., California		
OMIT:		
Brick Tenders:		
Area 1		
Area 1: Amador, El Dorado, Nevada, Placer; Sacramento, and Yolo Counties	$13.80	$3.46
ADD:		
Brick Tenders:		
Area 1		
Area 1: Alpine, Amador, Butte, Colusa, El Dorado, Glenn, Lassen, M^Odoc, Nevada, Placer, Plumas, Sacramento, Shasta, Sierra, Siskiyou, Sutter, Tehama, Trinity, Yolo and Yuba Counties	13.80	3.46

	Basic Hourly Rates	Fringe Benefits
DECISION NO. IL85-5004 - Mod# 1 (50 FR 2762 - January 18, 1985) Kankakee County, Illinois		
CHANGE:		
ELECTRICIANS:		
Residential	$11.40	$1.85+ 3.6%
TILE FINISHERS	14.20	2.53
TRUCK DRIVERS:		
2-3Axles	15.50	c
4 Axles	15.70	c
5 Axles	15.90	c
6 Axles	16.05	c
FOOTNOTES:		
c. $119.70 per week		
OMIT:		
PAINTERS		
ADD:		
PAINTERS:		
Brush; Roller; Taper (hand); and Paperhanger	15.24	
Swing Stage; Scaffolding over 30 ft; Epoxy; Toxic materials; Sandblast; Spray Machine taping	16.24	

	Basic Hourly Rates	Fringe Benefits
DECISION #IL83-2037-MOD #6 (48 FR19583-April 29, 1983) Illinois, Indiana, Michigan, Minnesota, New York, Ohio, Pennsylvania and Wisconsin		
CHANGE:		
TUG WORKERS:		
Fireman, Lineman, Oiler Deckhand, Scowman (on/or with tugboards, lauches, or other self-propelled boats)	$18.18	$1.10+ b+d
DREDGE WORKERS:		
Fireman, oiler, deckhand & scowman (with dipper dredges, hydraulic dredges or other floating equipment engaged in dredging operations); pipeline men (both afloat & shore, including loading, unloading, installing, maintaining & handling pipelines for hydraulic dredges & sandboats)	18.18	1.10+ b+d
Range & Sweep men, Service truck driver	14.30	1.10+ b+d
FOOTNOTES:		
b: $16.44 per day per employee		
d: Eight paid holidays (Paul Hall's Day combined with Washington's Birthday)		

MODIFICATIONS P. 2

	Basic Hourly Rates	Fringe Benefits
DECISION NO. OR84-5020 - Mod# 10 (49 FR 25821 - June 22, 1984) Statewide Oregon		
CHANGE:		
BRICKLAYERS; STONEMASONS:		
Area 2:		
Projects Under $1 million	$14.23	$3.27
SHEET METAL WORKERS:		
Area 1	20.04	4.54
STEAMFITTERS:		
Area 1	20.48	3.65
LINE CONSTRUCTION:		
Area 1, Zone 1:		
Fringe benefits:		
Groups 1,2&3		3.25+3%
Groups 4,5,6&7		2.55+3%

	Basic Hourly Rates	Fringe Benefits
DECISION NO. ID85-5010 - Mod# 1 (50 FR 6503 - February 15, 1985) Statewide Idaho		
CHANGE:		
CARPENTERS:		
Area 2:		
Fringes (all classifications)		$4.88
LINE CONSTRUCTION:		
Area 1, Zone 1:		
Cable Splicer, Leadman pole Sprayer	20.03	3.25+3%
Lineman, pole sprayer, heavy line equip man, certified lineman welder	18.11	3.25+3%
Tree trimmer	16.35	3.25+3%
Line equipment Man	15.61	2.55+3%
Head groundman, powderman, Jackhammerman	13.66	2.55+3%
Head groundman (chipper)	13.66	2.55+3%
Groundman	12.84	2.55+3%

	Basic Hourly Rates	Fringe Benefits
DECISION NO. MA85-3013 - MOD. #1 (50 FR 10587 - March 15, 1985) Essex, Suffolk, Middlesex, Norfolk, Bristol, Plymouth, Barnstable, Duke's, Nantucket Counties Massachusetts		
CHANGE:		
CARPENTERS		
Zone 5A	15.43	3.77
PLUMBERS, PIPEFITTERS & STEAMFITTERS:		
Aera 2	18.15	4.82
SPRINKLER FITTERS		
Area 1	21.75	3.41

	Basic Hourly Rates	Fringe Benefits
DECISION NO. MA85-3014 - MOD. #1 (50 FR 10594 - March 15, 1985) Worcester County, Massachusetts		
CHANGE:		
ELECTRICIANS		
Area 1	16.80	3.78+ 3%

	Basic Hourly Rates	Fringe Benefits
DECISION NO. MA85-3015 - MOD. #1 (50 FR 10600 - March 15, 1985) Berkshire, Franklin, Hampden and Hampshire Counties, Massachusetts		
CHANGE:		
ASBESTOS WORKERS	18.73	4.53
ELECTRICIANS		
Area 3	16.80	3.78+ 3%

MODIFICATIONS P. 3

DECISION NUMBER OH83-5121 - MOD. #12
(48 FR 53154 - November 25, 1983)
Statewide, Ohio

	Basic Hourly Rates	Fringe Benefits
Change:		
Bricklayers & Stonemasons:		
Area 6	$15.52	$3.21
Area 7	16.945	2.25
Area 10	15.00	1.75
Area 20	17.365	3.53
Area 30	17.14	3.10
Carpenters & Piledrivermen:		
Area 9:		
Piledrivermen	15.53	4.665
Area 14:		
Carpenters	16.20	3.80
Piledrivermen	17.11	3.80
Electricians:		
Area 4	18.20	3.80+ 3 1/2%
Area 12	14.14	2.48+ 3%
Ironworkers:		
Area 10	14.79+ 8%	3.63
Painters:		
Area 2	15.00	1.89
Power Equipment Operators:		
Zone 1: Columbiana, Mahoning & Trumbull Cos.:		
Class 1	17.38	4.11
Class 2	16.59	4.11
Class 3	15.83	4.11
Class 4	15.36	4.11
Class 5	15.16	4.11
Class 6	17.65	4.11
Omit:		
Footnote:		
o. 3% of gross earnings		

DECISION NUMBER OH83-5127 - MOD. #12
(48 FR 56903 - December 23, 1983)
Adams, Allen,... Wood & Wyandot Counties, Ohio

	Basic Hourly Rates	Fringe Benefits
Change:		
Asbestos Workers:		
Area 5	$16.10	$5.57
Bricklayers; Caulkers; Cleaners; Pointers; & Stonemasons:		
Area 4	15.52	3.21
Area 5	16.945	2.25
Electricians:		
Area 9	14.14	3% + 2.48
Glaziers:		
Area 9	16.34	1.26
Ironworkers:		
Area 6	14.79+ 8%	3.63
Lathers:		
Area 1	15.50	3.70
Marble Setters; Terrazzo Workers; & Tile Setters:		
Area 4:		
Marble Setters	16.355	2.25
Terrazzo Workers; & Tile Setters	16.305	2.25
Area 14:		
Marble Setters	17.385	3.53
Millwrights:		
Area 5	16.44	3.31
Area 7	16.65	3.70
Painters:		
Area 2:		
Brush; Drywall Taping; & Rollers	13.53	1.89
Wall Covering; Paperhanging	13.80	1.89
Sandblasting; Spray; & Steamcleaning	14.05	1.89
Sheet Metal Workers:		
Area 8	17.18	3.32
Laborers:		
Area 2:		
Group 1	11.90	3.00
Group 2	12.05	3.00
Group 3	12.20	3.00
Omit:		
Footnote:		
y. 8% of gross earnings		

MODIFICATIONS P. 4

DECISION NO. PA84-3037 - MOD. #1
(49 FR 39436 October 5, 1984)
Lebanon, Lycoming, Northumberland, Schuylkill & Sullivan Counties
Pennsylvania

	Basic Hourly Rates	Fringe Benefits
CHANGE:		
ASBESTOS WORKERS		
Zone 2	16.33	2.66
CARPENTERS		
Zone 2	13.22	2.55
ELECTRICIANS:		
Zone 1	13.06	3.97
Zone 3	16.40	1.70 +3%
Zone 5	17.38	1.89+ 3%
IRONWORKERS:		
Zone 3		
Structural	17.75	4.30
Reinforcing	17.50	4.30
PAINTERS		
Zone 3		
Brush	12.22	1.30
Structural Steel	12.67	1.30
Spray	12.97	1.30
PILEDRIVERMEN	15.97	6.91+d
PLASTERERS		
Zone 4	13.81	1.66
OMIT:		
PLUMBERS		
Zone 1	16.72	2.44
Zone 2	15.24	3.95
Zone 3	17.05	2.39
Zone 4	13.38	3.59
STEAMFITTERS		
Zone 1	16.72	2.44
Zone 2	14.79	4.35
Zone 3	17.05	2.39
Zone 4	18.38	3.59

	Basic Hourly Rates	Fringe Benefits
ADD:		
PLUMBERS		
Zone 1	15.76	3.64
Zone 2	15.24	4.30
Zone 3	17.85	2.42
Zone 4	18.68	3.94
Zone 5	16.06	3.64
STEAMFITTERS		
Zone 1	15.76	3.64
Zone 2	14.79	4.85
Zone 3	17.85	2.42
Zone 4	18.68	3.94
Zone 5	16.06	3.64

DECISION NO. PA84-3037 Modification No. 1

OMIT:

AREA COVERED BY PLUMBERS ZONES

Zone 1 - Lycoming & Sullivan Counties
Zone 2 - Schuylkill County
Zone 3 - Northumberland County; Lebanon County, (West of Route 501)
Zone 4 - Lebanon County (East of Route 501)

AREA COVERED BY STEAMFITTERS ZONES

Zone 1 - Lycoming & Sullivan Counties
Zone 2 - Schuylkill County
Zone 3 - Northumberland County; Lebanon County, (West of Route 501)
Zone 4 - Lebanon County; (East of Route 501)

ADD:

AREA COVERED BY PLUMBERS ZONES

Zone 1 - Lycoming
Zone 2 - Schuylkill County
Zone 3 - Northumberland County; Lebanon County, (West of Route 501)
Zone 4 - Lebanon County (East of Route 501)
Zone 5 - Sullivan County

AREA COVERED BY STEAMFITTERS ZONES

Zone 1 - Lycoming
Zone 2 - Schuylkill County
Zone 3 - Northumberland County; Lebanon County, (West of Route 501)
Zone 4 - Lebanon County; (East of Route 501)
Zone 5 - Sullivan County

DECISION NO. PA82-3011 - MOD. #12
(47 FR 10963 - March 12, 1982)
Bradford, Tioga & Union Counties, Pennsylvania

CHANGE:

	Basic Hourly Rates	Fringe Benefits
ELECTRICIANS:		
Tioga County in its entirety Remainder of Union and Bradford Counties	13.06	3.97
PLASTERERS:		
Tioga, Union and Remainder of Bradford County	14.20	

DECISION NO. PA84-3015 - MOD. #7
(49 FR 22976 - June 1, 1984)
Cumberland, Dauphin, Perry, Juniata, New Cumberland Depot in York County, Pennsylvania

CHANGE:

	Basic Hourly Rates	Fringe Benefits
ASBESTOS WORKERS	17.91	2.04
BRICKLAYERS & STONE MASONS	13.92	2.03
ELEVATOR CONSTRUCTORS	15.90	3.29+ a+b
ELEVATOR CONSTRUCTORS HELPERS	11.13	3.29+ a+b
ELEVATOR CONSTRUCTORS PROBATIONARY	7.95	
PAINTERS:		
Brush	14.22	1.30
Structural Steel	12.67	1.30
Spray	12.97	1.30
Tank, Bridge, Stack	13.47	1.30
TERRAZZO & TILE SETTERS	14.65	2.02

DECISION NO. PA84-3035 - MOD. #4
(49 FR 27243 - Sept. 21, 1984)
Lackawanna, Susquehanna, Wayne & Wyoming Counties Pennsylvania

CHANGE:

	Basic Hourly Rates	Fringe Benefits
CEMENT MASONS:		
Wyoming, Wayne, Susquehanna Counties, Scranton in Lackawanna County	16.85	
PLASTERERS	16.93	
PLUMBERS	15.24	4.45

DECISION #TX84-4036-MOD#6
(49 FR 22185-May 25,1984)
Jefferson & Orange Cos., Texas

CHANGE:

	Basic Hourly Rates	Fringe Benefits
Elevator Constructors:		
Mechanics	$15.195	3.29+a
Helpers	10.64	3.29+a
Helpers (Prob.)	7.60	
Bricklayers & Stonemasons	17.28	2.40

DECISION #TX84-4037-MOD#5
(49 FR 22191-May 25,1984)
Armstrong, Carson, Castro, Childress, Collingsworth, Dallam, Deaf Smith, Donley, Gray, Hansford, Hartley, Hemphill, Hutchison, Lipscomb, Moore, Ochiltree, Oldham, Potter, Randall, Roberts, Sherman, Swisher and Wheeler Cos., Texas

CHANGE:

	Basic Hourly Rates	Fringe Benefits
Electricians: Zone 2		
Electricians	14.30	1.00+ 3.25%
Cable Splicers	14.55	1.00+ 3.25%

MODIFICATIONS P. 7

DECISION #TX85-4001-MOD#2
(50 FR 3623-January 25, 1985)
Galveston & Harris Cos., Texas

CHANGE:

	Basic Hourly Rates	Fringe Benefits
Elevator Constructors:		
Mechanics	15.195	3.29+a
Helpers	10.64	3.29+a
Helpers (Prob.)	7.60	

DECISION #TX84-4015-MOD#6
(49 FR 10608-March 16,1984)
Wichita County, Texas

CHANGE:

	Basic Hourly Rates	Fringe Benefits
Electricians:		
Electricians	14.30	1.00+ 3.25%
Cable Splicers	14.55	1.00+ 3.25%

DECISION #TX83-4075—MOD. #2
(48 FR 48908—Oct. 21, 1983)
Ector and Midland Cos., Texas

CHANGE:

	Basic Hourly Rates	Fringe Benefits
Bricklayers and Stonemasons	$13.50	$ .50
Electricians	14.90	1.60+ 3.10%
Plumbers and Pipefitters	14.75	1.49
Sheet Metal Workers	14.30	2.17 + 3%

DECISION NO. WA84-5040 - Mod#6
(49 FR 45532 - Nov. 14, 1984)
Statewide Washington

CHANGE:

	Basic Hourly Rates	Fringe Benefits
CARPENTERS:		
Area 4:		
Carpenters	16.57	3.42
Piledriver, sawfiler, stationary power woodworking tool	16.72	3.42
Boommen, Carpenters(burned, charred, treated material)	16.82	3.42
Piledriver, creosote	16.93	3.42
Millwright, Machine Erectors	17.07	3.42
ELEVATOR MECHANICS:		
Area 1	19.855	a+3.29
GLAZIERS:		
Area 5	16.84	b+2.68
PAINTERS:		
Area 1:		
Drywall Taper	14.67	2.59
Area 4:		
Striper	16.65	1.83
SHEET METAL WORKERS:		
Area 3	20.04	4.54
TERRAZZO WORKERS; TILE SETTERS:		
Area 2	16.48	2.00
Area 7	17.44	3.43
LINE CONSTRUCTION:		
Group 6:		
Head groundman (chipper)	13.66	
FRINGE BENEFITS:		
Groups 1 to 3		3.25+3½%
Groups 4 to 7		3.25+3½%
ELECTRONIC TECHNICIANS:		
Area 1	12.82	1.12+3%
ADD:		
ELECTRONIC TECHNICIANS:		
Area 3:		
Grays Harbor, Lewis, Mason, Pierce, Pacific, and Thurston Counties	14.00	7.4%

SUPERSEDEAS DECISION

STATE: Colorado
DECISION NUMBER: CO85-5021
COUNTIES: Statewide
DATE: Date of Publication
Supersedes Decision No. CO83-5109 dated April 8, 1983, in 48 FR 15404.
DESCRIPTION OF WORK: Heavy and Highway Projects

	Basic Hourly Rates	Fringe Benefits
CARPENTERS	$12.50	$3.22
CEMENT MASONS	12.04	2.79
ELECTRICIANS:		
Area 1:		
Electricians	16.85	2.10+ 3-3/10%
Cable Splicers	17.10	2.10+ 3-3/10%
Area 2:		
Electricians	16.00	1.50+ 4%
Cable Splicers	16.25	1.50+ 4%
Area 3:		
Contracts over $100,000.00:		
Electricians	15.49	2.00+ 4½%
Cable Splicers	17.04	2.00+ 4½%
Electricians on electrical contracts less than $100,000.00	11.50	1.80+ 4½%
Area 4:		
Electricians	16.12	2.06+ 3%
IRONWORKERS:		
Structural, Ornamental, and Reinforcing	15.50	3.53
LINE CONSTRUCTION:		
Cable Splicers	18.55	2.00+ 3%
Journeyman Lineman Gas Fitter Welder Line Equipment Operator Line Truck Crew Class 1:	16.88 13.33	2.00+ 3% 2.00+ 3%
Groundman	10.28	
PAINTERS:		
Area 1:		
Brush	15.89	2.33
Spray, Swing Stage	16.49	2.33

	Basic Hourly Rates	Fringe Benefits
PAINTERS (Cont'd):		
Area 2:		
Brush	$11.20	$1.88
Spray, Swing Stage	11.80	1.88
Area 3:		
Brush	12.19	1.88
Spray, Swing Stage	12.79	1.88
PLUMBERS:		
Montezuma County	17.45	2.65

	Basic Hourly Rates ZONE 1	Basic Hourly Rates ZONE 2
LABORERS:		
Group 1	$ 9.95	$10.45
Group 2	10.05	10.55
Group 3	10.35	10.85
Group 4	10.50	11.00
Group 5	10.70	11.20
Group 6	10.75	11.25
TUNNEL LABORERS:		
Group 1	9.95	10.45
Group 2	10.85	11.35
Group 3	10.95	11.45
Group 4	11.03	11.53
Group 5	11.10	11.60
Group 6	12.00	12.50
(Shafts, Raises, Missile Silos and all underground work other than Tunnels):		
Group 1	10.95	11.45
Group 2	11.10	11.60
Group 3	11.20	11.70
Group 4	11.48	11.98
Group 5	11.53	12.03
Group 6	12.13	12.63

FRINGE BENEFITS:
$2.59

DECISION NO: CO85-5021

	Basic Hourly Rates	Fringe Benefits
POWER EQUIPMENT OPERATORS:	ZONE 1	ZONE 2
(Other than for work in Tunnels, Shafts, and Raises:		
Group 1	$11.26	$11.93
Group 2	11.61	12.28
Group 3	11.96	12.63
Group 4	12.11	12.78
Group 5	12.26	12.93
Group 6	12.41	13.08
(For work in Tunnels, Shafts, and Raises):		
Group 1	13.41	14.08
Group 2	13.76	14.43
Group 3	13.86	14.53
Group 4	14.11	14.78
Group 5	14.26	14.93
Group 6	14.66	15.33
Group 7	14.41	15.08
FRINGE BENEFITS $3.70		
TRUCK DRIVERS:	ZONE 1	ZONE 2
Group 1	12.91	12.18
Group 2	13.01	12.31
Group 3	13.11	12.44
Group 4	13.21	12.51
Group 5	14.81	12.56
Group 6	14.86	12.63
Group 7	14.91	12.68
Group 8	14.96	12.75
Group 9	15.01	12.88
Group 10	15.06	12.94
Group 11	15.16	13.06
Group 12	15.21	13.31
Group 13	15.31	13.36
Group 14	15.46	13.43
Group 15	15.51	13.57
Group 16	15.61	13.81
Group 17	15.71	14.07
Group 18	15.81	14.81
Group 19	15.91	-
Group 20	16.11	-
FRINGE BENEFITS $2.94		

Basic Hourly Rates	Fringe Benefits

ZONE DESCRIPTIONS

CARPENTERS

Counties entirely within Zone 1:

Adams	Crowley	Gilpin	Morgan
Alamosa	Custer	Huerfano	Otero
Arapahoe	Delta	Jefferson	Phillips
Archuleta	Denver	La Plata	Prowers
Bent	Douglas	Lake	Pueblo
Boulder	Eagle	Larimer	Rio Grande
Chaffee	El Paso	Las Animas	Sedgwick
Clear Creek	Elbert	Logan	Teller
Conejos	Fremont	Mesa	Weld
Costilla	Garfield	Montezuma	

Counties entirely within Zone 2:

Baca	Jackson	Moffat	Routt
Cheyenne	Kiowa	Ouray	San Juan
Dolores	Kit Carson	Park	San Miguel
Grand	Lincoln	Pitkin	Summit
Gunnison	Mineral	Rio Blanco	Yuma
Hinsdale			

Legal description of the portions of Montrose, Saguache, and Washington Counties which are included within Zone 1, as follows:

All of Montrose County lying Northerly of the North Line of Ouray County and said North Line extended to the Township Line between R11W and R12W, said part being East of said Township Line of the New Mexico Principal Meridian and the Eastern portion of Saguache County; from Highway #285 to the Town of Saguache, and Highway #114 to the County Line, and all of Washington County lying North of the 40°00'00" Latitude Base Line

Legal description of the portions of Montrose, Saguache and Washington Counties which are included within Zone 2, as follows:

All of Montrose County except that part lying Northerly of the North Line of Ouray County and said North Line extended West to the Township Line between R11W and R12W, said point being East of said Township Line of the New Mexico Principal Meridian and the Western portion of Saguache County; from Highway #285 to town of Saguache and Highway #114 to County Line, and all of Washington County lying South of the 40°00'00" Latitude Base Line.

ZONE DESCRIPTIONS (Cont'd)

ELECTRICIANS:
Area 1: Adams, Arapahoe, Boulder, Clear Creek, Denver, Douglas, Eagle, Gilpin, Grand, Jackson, Jefferson, Lake, Larimer, Logan, Morgan, Phillips, Sedgwick, Summit, Washington, Weld, and Yuma Counties
Area 2: Delta, Dolores, Garfield, Gunnison, Hinsdale, La Plata, Mesa, Moffat, Montezuma, Montrose, Ouray, Pitkin, Rio Blanco, Routt, San Juan, and San Miguel Counties
Area 3: Alamosa, Archuleta, Baca, Bent, Chaffee, Crowley, Custer, Fremont, Huerfano, Kiowa, Las Animas, Mineral, Otero, Prowers, Pueblo, Rio Grande, and Saguache Counties
Area 4: Cheyenne, Elbert, El Paso, Kit Carson, Lincoln, Park, and Teller Counties

PAINTERS:
Area 1: Adams, Arapahoe, Boulder, Clear Creek, Delta, Denver, Douglas, Eagle, Elbert, Garfield, Gilpin, Grand, Gunnison, Jackson, Jefferson, Lake, Larimer, Logan, Mesa, Moffat, Montrose, Morgan; Park County (northern half); Phillips, Pitkin, Rio Blanco, Routt, Sedgwick, Summit, Washington, and Weld Counties
Area 2: Baca, Bent, Crowley, Custer, Huerfano, Kiowa, Las Animas, Otero, Prowers, and Pueblo Counties
Area 3: Alamosa, Archuleta, Chaffee, Cheyenne, Dolores, El Paso, Fremont, Hinsdale, Kit Carson, La Plata, Lincoln, Mineral, Montezuma, Ouray; Park County (southern half); Rio Grand, Saguache, San Juan, San Miguel, and Teller Counties

LABORERS

Zone 1: The area encompassed by 15 driving miles from the Main Post Office at Craig, Steamboat Springs, and Meeker. Also, included are all other Counties not outlined in Zone 2.
Zone 2: The Counties of Jackson, Moffat, Rio Blanco and Routt

Group 1: Minimum Labor, including Caissons to 8'; Carrying Reinforcing Rods; Work on Cross Culverts, connections and side drains in connection with highway work, whether corrugated metal or concrete pipe; Fence Erectors; Metal Mesh; Dowel Bars; Tie Bars and Chairs in concrete paving; Nursery Man including seeding, mulching and planting of trees, shrubs and flowers; Stake Chaser; Gabion Baskets and Reno Mattresses; Pipe plants and yards, stringing of pipe or skids, handling and signaling on pipe line work

POWER EQUIPMENT OPERATORS
(Other than for work in Tunnels, Shafts and Raises)

Group 1: Air Compressor; Asphalt Screed; Oiler; Brakeman; Drill Operator - smaller than Williams MF and similar; Tender to Heavy Duty Mechanic and/or Welder; Operators of 5 or more light plants, Welding Machines, Generators, single unit conveyor; Pumps; Vacuum Well Point System; Tractor, under 70 HP with or without attachments Grade Checker; Compressors, 360 C.F.M. or less

Group 2: Conveyor, handling building materials; Ditch Witch and similar Trenching Machine; Fireman or Tank Heater, road; Forklift; Haulage Motor Man; Pugmill; Portable Screening Plant with or without a spray bar; Screening Plants, with classifier; Self-propelled Roller, rubber-tired under 5 tons

Group 3: Asphalt Plant; Backfiller, Bituminous Spreader or Laydown Machine; Cableway Signalman; Caisson Drill; Williams MF, similar and larger; C.M.I. and similar; Concrete Batching Plants; Concrete Finish Machine; Concrete Gang Saws on concrete paving; Concrete Mixer, less than 1 yd.; Concrete Placement Pumps, under 8 inches; Distributors, Bituminous Surfaces; Drill, Diamond or Core; Drill Rigs, Rotary, Churn, or Cable Tool; Elevating Graders, Equipment Lubricating and service Engineer; Engineer Fireman; Grout Machine; Gunnite Machine; Hoist, 1 drum; Hydraulic Backhoes, wheel mounted under 3/4 yd.; Loader, Barber Green, etc.; Loader up to and including 6 cu. yds.; Machine Doctor; Mechanic; Motor Grader/Blade, rough; Road Stabilization Machine; Rollers, self-propelled, all types over 5 tons; Sandblasting Machine; single unit portable crusher, with or without washer; Tie Tamper, wheel mounted; Tractor, 70 HP and over with or without attachments; Trenching Machine Operator; Welder; Winch on truck

Group 4: Cable operated Crane, truck mounted; Cable operated power Shovels, Draglines, Clamshells, and Backhoes, 5 cu. yds. and under; Concrete Mixer over 1 cu. yd.; Concrete Paver 34E or similar; Concrete Placement Pumps, 8 inches and over; Crane, 50 tons and under; Hoist, 2 drums; Hydraulic Backhoe, 3/4 yd. and over; Loader, over 6 cu. yds.; Mechanic-welder, heavy duty; Mixer Mobile; Motor Grader/blade, finish; Multiple unit portable Crusher, with or without washer; Piledriver; Scrapers, single bowl under 40 cu. yds.; Self-propelled Hydraulic Crane; Tractor with sideboom; Truck mounted Hydraulic Crane

Group 5: Cable operated power Shovels, Draglines, Clamshells and Backhoes over 5 cu. yds.; Crane, over 50 tons carrier mounted; Derrick; Electric rail type Tower Crane; Hoist, 3 drum or more; Quad Nine and similar push unit; Scrapers single bowl including pups 40 cu. yds. and tandem bowls and over

Group 6: Cableway; Climbing Tower Crane; Crawler or truck mounted Tower Crane; Wheel Excavator, Tower Crane, truck type

ZONE DEFINITIONS
POWER EQUIPMENT OPERATORS

Legal Description of the portions of Adams, Arapahoe, Eagle, Elbert, Las Animas, Montrose and Washington counties which are included within Zone 1, as follows:

All of Adams, Arapahoe, Elbert and Las Animas counties lying west of the Township line between R59W and R60W of the 7th Guide Meridian West; and all of Eagle County lying west of the Township line between R80W and R81W of the North line of Ouray County and said North line extended west to the Township line between R11W and R12W said part lying east of said Township line of the New Mexico Principal Meridian, and all of Washington County lying North of the 40°00'00" Base Line.

Legal Description of the portions of Adams, Arapahoe, Eagle, Elbert, Las Animas, Montrose and Washington counties which are included within Zone 2, as follows:

All of Adams, Arapahoe, Elbert and Las Animas lying east of the Township line between R59W and R60W of the 7th Guide Meridian West, and all of Eagle County lying east of the Township line between R80W and R81W of the 9th Guide Meridian West and all of Montrose County except that part lying northerly of the north line of Ouray County and said north line extended west to the Township line between R11W and R12W, said point being east of said Township line of the New Mexico Principal Meridian, and all of Washington County lying south of the 40°00'00" latitude Base Line.

WELDERS - receive rate prescribed for craft performing operation to which welding is incidental

Unlisted classifications needed for work not included within the scope of the classifications listed may be added after award only as provided in the labor standards contract clauses (29 CFR, 5.5 (a)(1)(ii)).

LABORERS (TUNNEL)

Group 1: Outside Labor

Group 2: Minimum Tunnel Labor, Dry Houseman

Group 3: Cable or Hose Tenders, Chuck Tenders, Concrete Laborers, Dumpmen, Whirley Pump Operators

Group 4: Tenders on Shotcrete, Gunniting and Sand Blasting; Tenders, Core and Diamond Drills; Pot Tenders

Group 5: Cement Finisher Tender, applying of concrete processing materials

Group 6: Collapsible Form Movers and Setters, Miners, Machine Men and Bit Grinders, Nippers, Powdermen and Blasters, Reinforcing Steel Setters, Timbermen (steel or wood tunnel support, including the placement of sheeting when required) and all cutting and welding that is incidental to the Miner's work; Tunnel Liner Plate Setters; Vibrator Men, internal and external; Unloading, stopping and starting of Moran Agitator Cars; Diamond and Core Drill Operators; Cement Finisher (underground); Shotcrete Operator; Gunnite Nozzlemen, Sand Blasters, Pump Concrete Placement Men

(Shafts, Raises, Missile Silos and All Underground Work other than Tunnels)

Group 1: Laborers, Topmen, Bottommen and Cagers

Group 2: Chucktenders, Concrete Laborers, Whirley Pump Operators

Group 3: Tenders in Shotcrete Gunniting and Sand Blasting; Tenders on Core and Diamond Drills; Pot Tenders; Cement Finisher Tenders, applying concrete processing materials

Group 4: Diamond and Core Drill Operators; Cement Finisher (underground); Gunnite Nozzlemen; Shotcrete Operators; Sand Blasters and Pump Concrete Placement Men

Group 5: Any employee performing work underground from a Bos'n Chair, Swinging Stage, Life Belt or Block and Tackle as a safety requirement. All lines and safety belts used shall be of a type approved by State and Federal Laws

Group 6: Collapsible Form Movers and Setters, Miners, Machine Men and Bit Grinders, Nippers, Powdermen and Blasters, Reinforcing Steel Setters, Timbermen (steel or wood tunnel) support, including the placement of sheeting when required) and all cutting and welding that is incidental to the Miner's work; Liner Plate Setters; Vibrator Men, internal and external

LABORERS (Cont'd)

Group 2: Chuck Tenders, Nippers, Core, and Diamond Drill Tenders, Powdermen Tenders; Hot Asphalt Labor, Rakers, Boxtenders, Asphalt Curb Machines, Potmen (not mechanical); Multi-plate Culvert Pipe; Air, gas and electrical tool Operators; Barco Hammers; Spaders, electric hammers; Air Tampers; Cutting Torch on demolition work; Caissons 8' to 12'; Cofferdams; Power operated Concrete Buggies; Operators of concrete saws on pavement (other than Gang Saws); Timber and Chain Saws; Stresser or Stretcherman on Post Tension Prestressed Concrete on or off jobsite; Cement Finisher Tender; Sand Blaster; Concrete processing material; Monitor; Spotters; Dumpmen; Transverse Concrete Conveyor Operator; Mechanical Grouters; Boring Machine (air hydraulic); Automatic Concrete Power Curbing Machine; Jack Hammer; Vibrators; Paving Breakers; Frost proofing; Any Laborer performing bridge work over 40' above the ground or above a floor and working from a Bos'n Chair; Swing Stage, Life Belt or Block and Tackle as safety requirement. (All lines and safety belts used shall be of a type approved by State and Federal Laws); Gunniting and Shotcrete Tenders; Caissons over 12'; Scalers; Timbermen, underpinning and shoring; Form Setters and/or Stringmen on roads, highways, streets and airport runways; Distribution, placing and hooking of landing mats; Bull Float (hand operated) and Center Expansion Machines; Grade Checkers if required by employer; Pipe Wrappers; Dopers; Jeep Holiday Detector Men, Bandage Makers; Laborers working in Trenches on all pipe lines, sewer, water, gas, oil, telephone conduit, Pen Stock, Siphones, drainage lines, Caulkers, Yarners, Pine Graders, air, gas, electric and hydraulic tools, Boring Machines, Hydraulic Jacks, Drills, Tampers, and similar operated tools; Wiping of Joint Concrete Pipe, inside and out; Labor applicable to pipe coating or wrapping, plants and yards; Enamelers of pipe, inside and out

Group 3: Powdermen and Blasters; Gunnite Nozzlemen; Shotcrete Operator; Pipe Layer on trunk pipe lines in connection with highway work; Relining Pipe; Mixer Man; Pipelayer; Hydro-broom

Group 4: Wagon Drills and Air Tracks; Jackhammer Operators in Caissons over 12'; Bellers and Stemmen; Licensed Powdermen; Diamond and Core Drills powered by air

Group 5: Any work, other than on bridges, performed by Laborers working from a Bos'n Chair, Swinging Stage, Life Belt or Block and Tackle as a safety requirement. All lines and safety belts used shall be of a type approved by State and Federal Laws; Puge and Galleys in Dams

Group 6: Mason Tenders, Brick and Plaster

POWER EQUIPMENT OPERATORS (Cont'd)
(For work in Tunnels, Shafts and Raises)

Group 1: Brakeman

Group 2: Motorman

Group 3: Compressor (900 CFM and over) serving Tunnels, Shafts and Raises

Group 4: Air Tractors; Grout Machine; Gunnite Machine; Jumbo Form; Mechanic; Welder

Group 5: Concrete Placement Pumps, 8" and over discharge; Mucking Machines and Front End Loaders, underground, Slusher; Mine Hoist Operator

Group 6: Mole

Group 7: Mechanic - Welder, heavy duty

TRUCK DRIVERS ZONE DEFINITIONS

COUNTIES WITHIN ZONE 1:

Alamosa, Archuleta, Baca, Bent, Cheyenne, Conejos, Costilla, Crowley, Delores, Eagle, Grand, Gunnison, Hinddale, Jackson, Kiowa, Kit Carson, Lake, LaPlata, Lincoln, Logan, Mineral, Moffat, Montezuma, Morgan, Otero, Ouray, Park, Phillips, Pitkin, Prowers, Rio Blanco, Rio Grand, Routt, Saquache, San Juan, San Miguel, Sedgewick, Summit, Tuma, Washington

COUNTIES WITHIN ZONE 2:

Adams, Arapahoe, Boulder, Chaffee, Clear Creek, Custer, Delta, Denver, Douglas, Elbert, El Paso, Fremont, Garfield, Gilpin, Huerfano, Jefferson, Larimer, Las Animas, Mesa, Pueblo, Teller, Weld and Montrose

TRUCK DRIVERS ZONE 1

Group 1: Pick Up, Truck Driver Tenders, Dumpmen, Greasemen

Group 2: Dump truck driver to including 6 cubic yard, sweeper truck, flat rank single axle, and manhaul, shuttle truck or bus, liquid and bulk tankers - single axle

Group 3: Flat rank tandem axle battery men, mechanics tenders

Group 4: Fork lift driver

Group 5: Dump truck driver over 6 cubic yards, to and including 14 cubic yards

Group 6: Straddle truck driver, lumber carrier, liquid and bulk tankers-tandem axle

Group 7: Truck drivers-fuel truck, grease truck, combination fuel and grease

Group 8: Cement mixer - agitator truck to and including 10 cubic yards, Distributor truck driver, Liquid and bulk tankers - semi or combination

Group 9: Multi purpose truck-specialty and hoisting

Group 10: Dump truck driver over 14 cubic yards, to and including 29 cubic yards, Highboy, lowboy, floats, semi Cab operated distributor truck driver - semi Liquid and bulk tankers - Euclid - Electric or similar Truck Driver dumptor type, Youngbuggy, Jumbo and similar type equipment

Group 11: Truck driver, snow plow

Group 12: Cement mixer - agitator truck over 10 cubic yards, to and including 15 cubic yards

Group 13: Dump truck driver over 29 cubic yards, to and including 39 cubic yards

Group 14: Cement mixer - agitator truck over 15 cubic yards

Group 15: Tire man Dump truck driver over 39 cubic yards, to and including 54 cubic yards

Group 16: Mechanic

Group 17: Dump truck driver over 54 cubic yards, to and including 79 cubic yards

Group 18: Heavy duty diesel mechanic, body men, welders or combination men

Group 19: Dump truck driver over 79 cubic yards, to and including 104 cubic yards

Group 20: Dump truck driver over 104 cubic yards

TRUCK DRIVERS ZONE 2

Group 1: Pick up, truck driver tenders, Dumpmen, Greasemen

Group 2: Dump truck driver to including 6 cubic yard, sweeper truck, Flat rack single axle, and manhaul, shuttle truck or bus Liquid and bulk tankers - single axle

Group 3: Flat rank tandem axle Battery men, mechanics tenders Liquid and bulk tankers - tandem axle Dump truck driver over 6 cubic yards, to and including 14 cubic yards

Group 4: Straddle truck driver, lumber carrier

Group 5: Fork lift driver Truck drivers-fuel truck, grease truck, combination fuel

Group 6: Cement mixer - agitator truck to and including 10 cubic yards, Distributor truck driver

Group 7: Multi purpose truck - specialty and hoisting

Group 8: Dump truck driver over 14 cubic yards, to and including 29 cubic yards, cab operated distributor truck driver - semi Liquid and bulk tankers - Euclid - Electric or similar Truck Driver dumptor type, Youngbuggy, Jumbo and similar type equipment Liquid and bulk tankers - semi or combination (Water truck drivers required to middle-rate plus 10 cents.)

Group 9: Truck driver, snow plow

Group 10: Cement mixer - agitator truck over 10 cubic yards, to and including 15 cubic yards

Group 11: Dump truck driver over 29 cubic yards, to and including 39 cubic yards

Group 12: Tire man Dump truck driver over 39 cubic yards, to and including 54 cubic yards

Group 13: Cement mixer - agitator truck over 15 cubic yards

Group 14: Mechanic

Group 15: Dump truck driver over 54 cubic yards, to and including 79 cubic yards

Group 16: Dump truck driver over 79 cubic yards, to and including 104 cubic yards

Group 17: Dump truck driver over 104 cubic yards

Group 18: Heavy duty diesel mechanic, body men, welders or combination men

SUPERSEDEAS DECISION

STATE: Missouri COUNTIES: Statewide
DECISION NO.: MO85-4005 DATE: Date of Publication
Supersedes Decision No. MO84-4044 dated August 3, 1984 in 49 FR 31198.
DESCRIPTION OF WORK: Heavy and Highway Construction Projects

	Basic Hourly Rates	Fringe Benefits
CARPENTERS & PILEDRIVERMEN:		
Zone 1	$16.96	$3.43
Zone 1A	16.56	3.43
Zone 2	16.01	3.43
Zone 3	15.90	2.23
Zone 4	15.30	2.23
Zone 5	15.30	3.43
Zone 6	17.17	.86
Zone 6A	16.22	1.31
Zone 7	17.17	.86
Zone 7A	16.72	1.31
Zone 7B	17.17	.86
Zone 7C	16.67	1.36
Zone 7D	17.17	.86
Zone 8	15.55	2.05
Zone 9	16.05	2.67
Zone 10	16.96	2.70
CEMENT MASONS:		
Zone 1	16.325	1.95
Zone 2	15.03	1.70
Zone 3	15.17	2.33
Zone 4	12.75	
Zone 5	14.23	
Zone 6	15.85	
Zone 7	14.85	
Zone 8	14.50	2.33
Zone 9	15.35	2.60
Zone 10	14.65	2.60
Zone 11	12.45	2.95
ELECTRICIANS:		
Zone 1:		
Electrical contracts over $30,000.00	16.42	1.15+ 14.75%
Electrical contracts $30,000.00 & under	13.62	1.15+ 14.75%
Zone 2	16.18	3.01+ 10%
Zone 3:		
Electrical contracts not to exceed 2000 man hours	15.18	3.01+ 10%
ELECTRICIANS: (CONT'D):		
Electrical contracts 2000 man hours & over	$16.18	$3.01+ 10%
Zone 4:		
Electrical contracts not to exceed 2000 man hours	15.18	3.01+ 10%
Electrical contracts 2000 man hours & over	16.18	3.01+ 10%
Zone 5:		
Electrical contracts not to exceed 2000 man hours	14.58	3.01+ 10%
Electrical contracts 2000 man hours & over	16.18	2.19+ 10%
Zone 6	17.20	2.19+ 28-1/2%
Zone 7:		
Electrical contracts over $15,000.00	17.20	2.19+ 28-1/2%
Zone 8:		
Electrical contracts $15,000.00 & under	14.78	2.19+ 28-1/2%
Zone 9:		
Electrical contracts $15,000.00 & under	11.43	2.19+ 28-1/2%
Zone 10:		
Electrical contracts $15,000.00 & under	8.07	2.19+ 28-1/2%
Zone 11	14.55	1.89+ 9%
Zone 12	15.04	1.89+ 9%

DECISION NO.: MO85-4005

Page 2

	Basic Hourly Rates	Fringe Benefits
ELECTRICIANS (CONT'D):		
Zone 13	$13.97	$2.27 + 10%
Zone 14:		
Electricians	13.09	1.67+ 8%
Cable Splicers	13.44	1.67+ 8%
Zone 15:		
Electricians	15.71	3.47+ 10%
Cable Splicers	15.96	3.47+ 10%
IRONWORKERS:		
Zone 1	16.075	3.40
Zone 2	17.51	3.37
Zone 3	14.53	3.37
Zone 4	14.60	2.67
Zone 5	16.00	2.40
Zone 6	13.85	2.46
Zone 7	15.55	2.45
Zone 8	15.325	3.40
Zone 9	17.225	2.99
LABORERS:		
Group 1:		
Zone 1	12.43	3.45
Zone 2	11.28	3.20
Zone 3:		
(a)	14.90	2.05
(b)	14.40	2.55
Zone 4:		
(a)	14.15	2.05
(b)	13.65	2.55
Group 2:		
Zone 1	12.78	3.45
Zone 2	11.83	3.20
Zone 3:		
(a)	15.50	2.05
(b)	15.00	2.55
Zone 4:		
(a)	14.75	2.05
(b)	14.25	2.55
Zone 5: (Clay,Jackson, Platte & Ray Counties):		
Group 1	13.03	3.60
Group 2	13.82	3.60
Zone 6: (St. Louis City and County):		
General Laborer	15.275	2.58
Dynamiter or Powderman	15.775	2.58

	Basic Hourly Rates	Fringe Benefits
LINE CONSTRUCTION:		
Zone 1:		
Lineman	$18.37	$1.25 + 8-1/2%
Lineman Operator	17.10	1.25 + 8-1/2%
Groundman Powderman	12.84	1.25 + 8-1/2%
Groundman	12.23	1.25 + 8-1/2%
Zone 2:		
Lineman	17.54	1.25 + 8-1/2%
Lineman Operator	16.73	1.25 + 8-1/2%
Groundman Powderman	12.27	1.25 + 8-1/2%
Groundman	11.36	1.25 + 8-1/2%
Zone 3:		
Linemen & Cable Splicer	16.53	1.00+ 23.75%
Groundman-Winch Driver	12.15	1.00+ 23.75%
Groundman-Driver	11.72	1.00+ 23.75%
Equipment Operator	14.79	1.00+ 23.75%
Groundman	11.72	1.00+ 23.75%
Zone 4:		
Lineman	17.75	.65+ 13-1/2%
Groundman Equipment Operator	15.14	.65+ 13-1/2%
Groundman - Class A	11.26	.65+ 13-1/2%
Zone 5: Railroad & Cross County Transmission Lines:		
Lineman	15.50	1.00+ 8-1/2%
Lineman Operator	14.36	1.00+ 8-1/2%
Groundman Powderman	10.79	1.00+ 8-1/2%
Groundman	10.09	1.00+ 8-1/2%

DECISION NO.: MO85-4005

Page 3

	Basic Hourly Rates	Fringe Benefits
LINE CONSTRUCTION (CONT'D):		
Zone 5 (Cont'd):		
Pole Treating Specialist	$16.24	$1.00+ 8-1/2%
Pole Treating Truck Driver	10.79	1.00+ 8-1/2%
Pole Treating Groundman	10.09	1.00+ 8-1/2%
Zone 6: Telephone and Telegraph Railroad Communications and C.A.T.V. Work:		
Cable Splicer, Air Pressure Technician, Central Office Equipment Man and Key System Installer	10.16	.50+ 8-1/2%
Telephone Lineman, Installer, CATV Terminator and Equipment Operator (D-4 or larger Crawler;Wheel Trencher Quarter Yard Backhoe or larger)	9.73	.50+ 8-1/2%
Equipment Operator (all other small equipment)	8.50	.50+ 8-1/2%
Groundman-Winch Driver	7.61	.50+ 8-1/2%
Groundman	6.67	.50+ 8-1/2%
Zone 7: Telephone & Telegraph & CATV Work:		
Cable Splicers; Air Pressure Technician, Central Office Equipment Man	10.96	.45+3%
Telephone Lineman & Installer, Repairman, CATV Terminator, Equipment Operator (1/4 yd. Backhoe & larger & D-4 Crawler & larger)	10.39	.45+3%
Groundman-Winch Driver	7.87	.45+3%
Groundman	6.36	.45+3%

	Basic Hourly Rates	Fringe Benefits
PAINTERS:		
Zone 1:		
Brush & Roller	$16.04	$2.00
Spray	17.04	2.00
Bridge	16.79	2.00
Zone 2:		
Brush	11.30	1.07
Spray	12.30	1.07
Sandblasting & Waterblasting	13.10	1.07
Tower,Stacks,Walkway, Cables,Tanks, and Bridges	12.80	1.07
Bridges over 500 ft. in length	16.52	1.07
Zone 3:		
Brush	12.50	2.60
Spray, Structural Steel & Sandblasting	13.75	2.60
Zone 4:		
Brush	14.25	
Bridge	15.00	
Spray, Sandblasting Operator;Work performed on bridges 75 ft. in height	15.25	
All Structural Steel over 50 ft. in height	15.00	
Zone 5:		
Brush	14.60	1.45
Spray	15.60	1.45
Steel, storage bin & tank	15.00	1.45
Bridges,stage;Belt; Bazooka	15.10	1.45
Zone 6:		
Brush, Roller	13.02	.60
Spray	13.52	.60
Zone 7:		
Brush	13.70	.45
Spray	14.20	.45
Zone 8:		
Brush	16.00	2.53
Spray	18.00	2.53
Zone 9:		
Brush	13.73	1.28
Spray, Bridgeman, Steelmen	14.23	1.28
Zone 10:		
Brush	14.00	
Spray	16.00	

DECISION NO.: MO85-4005

Page 4

	Basic Hourly Rates	Fringe Benefits
POWER EQUIPMENT OPERATORS:		
Zone 1:		
Group I	$15.30	$4.07
Group II	15.05	4.07
Group III	14.35	4.07
Group IV:		
(a)	10.33	4.07
(b)	13.35	4.07
Zone 2:		
Group I	16.32	4.04
Group II	16.32	4.04
Group III	15.02	4.04
Group III (a)	13.95	4.04
Group IV	14.57	4.04
Group IV (a)	13.49	4.04
Group V:		
(a)	17.02	4.04
(b)	17.87	4.04
(c)	18.32	4.04
(d)	19.07	4.04
Zone 3:		
Group I	16.45	3.97
Group II	16.25	3.97
Group III	16.05	3.97
Group IV	15.45	3.97
Zone 4:		
Group I	14.85	3.97
Group II	14.50	3.97
Group III	14.30	3.97
Group IV	13.45	3.97
Zone 5:		
Group I	14.65	4.05
Group II	14.40	4.05
Group III	13.70	4.05
Group IV	12.20	4.05
Zone 6:		
Group I	14.60	4.05
Group II	14.25	4.05
Group III	14.05	4.05
Group IV	12.25	4.05
Zone 7:		
Group I	15.47	2.75
Group II	15.12	2.75
Group III	14.92	2.75
Group IV	12.87	2.75
Zone 8:		
Group I	15.90	3.97
Group II	15.70	3.97
Group III	15.50	3.97
Group IV	14.90	3.97

	Basic Hourly Rates	Fringe Benefits
TRUCK DRIVERS:		
Zone 1:		
Group 1	$14.17	$ 4.25
Group 2	14.02	4.25
Group 3	13.71	4.25
Group 4	13.51	4.25
Group 5	13.29	4.25
Zone 2:		
Group 1	19.25	
Group 2	19.40	
Group 3	19.47	
Group 4	19.36	
Group 5	19.15	
Zone 3:		
Group 1	18.05	
Group 2	18.20	
Group 3	18.27	
Group 4	18.16	
Group 5	17.95	
Zone 4:		
Group 1	15.09	3.00
Group 2	15.24	3.00
Group 3	15.31	3.00
Group 4	15.20	3.00
Group 5	14.99	3.00
Zone 5:		
Group 1	13.88	3.00
Group 2	14.03	3.00
Group 3	14.15	3.00
Group 4	14.04	3.00
Group 5	13.78	3.00
Zone 6:		
Group 1	13.15	3.00
Group 2	13.30	3.00
Group 3	13.42	3.00
Group 4	13.31	3.00
Group 5	13.05	3.00
Zone 7:		
Group 1: Trucks or Trailers of a water level capacity of 11.99 cu. yds. or less.	15.17	55.00 +a
Group 2: Forklift Trucks; Job Site Ambulance & Pickup Trucks & Flat Bed Trucks	14.00	55.00 +a

DECISION NO.: MO85-4005

Page 5

	Basic Hourly Rates	Fringe Benefits
TRUCK DRIVERS (CONT'D):		
Zone 7 (Cont'd):		
Group 3: Truck or Trailers of a water level capacity of 12.0 cu. yds. up to 22.0 cu. yds. including Euclids, Speedace and similar equipment of same capacity and Compressors	$15.37	$55.00 +a
Group 4: Trucks or Trailers of a water level capacity of 22.0 cu. yds. and over including Euclids, speedace and all Floats, Flat Bed Trailers, Boom Trucks, Winch Trucks including small trailers, Farm Wagons, Tilt-top Trailers, Field Offices Tool Trailers, Concrete Pumps, Concrete Conveyors and Gasoline Tank Trailers	15.47	55.00 +a

FOOTNOTE:

a - 7 Paid Holidays also, paid vacation of 3 days of 600 hours of service in any one contract year; 4 days paid vacation for 800 hours of service in any contract year; 5 days paid vacation for 1,000 hours of service in any one contract year; also .80 per hour health and welfare.

WELDERS: Receive rate prescribed for craft performing operation to which welding is incidental.

Unlisted classifications needed for work not included within the scope of the classifications listed may be added after award only as provided in the labor standards contract clauses (29 CFR, 5.5(a)(1)(ii)).

AREAS COVERED BY CARPENTERS AND PILEDRIVERMEN ZONES

Zone 1 - Franklin, Jefferson, St. Charles Counties
Zone 1A - Lincoln, Warren Counties
Zone 2 - Pike, St. Francois, Washington Counties
Zone 3 - Cass, Lafayette, Buchanan, Clinton and Johnson Counties
Zone 4 - Atchison, Andrew, Barry, Barton, Bates, Caldwell, Camden, Carroll, Cedar, Christian, Dade, Dallas,Daviess, DeKalb, Douglas, Gentry, Greene, Grundy, Harrison, Henry, Hickory, Holt, Jasper, Laclede, Lawrence, Livingston, McDonald, Mercer, Newton, Nodaway, Ozark, Polk, St. Clair, Saline, Stone, Taney, Vernon, Webster, Worth & Wright Counties
Zone 5 - Crawford, Dent, Gasconade, Iron, Madison, Maries, Montgomery, Phelps, Pulaski, Reynolds, Shannon & Texas Counties
Zone 6 - Boone, Cooper and Howard Counties
Zone 6A - Pettis, Benton and Morgan Counties
Zone 7 - Lewis, Marion and Ralls Counties
Zone 7A - Callaway, Cole, Miller, Moniteau and Osage Counties
Zone 7B - Adair, Putnam, Sahuyler, Knox and Sullivan Counties
Zone 7C - Audrain and Monroe Counties
Zone 7D - Randalph, Chariton, Linn, Macon and Shelby Counties
Zone 8 - Bollinger, Butler, Cape Girardeau, Carter, Dunklin, Bowell, Mississippi, New Madrid, Oregon, Pemiscot, Perry, Ripley, Ste. Genevieve, Scott, Stoddard and Wayne Counties
Zone 9 - Clay, Jackson, Platte and Ray Counties
Zone 10 - St. Louis County and City

AREAS COVERED BY CEMENT MASONS ZONES

Zone 1 - Bates, Carroll, Cass & Lafayette Counties
Zone 2 - Dent, Phelps, Pike, Pulaski, Texas, Marion, Ralls and Shannon Counties
Zone 3 - Clay, Jackson, Platte & Ray Counties
Zone 4 - Cedar, Christian,Dade, Dallas, Douglas, Greene, Howell, Laclede, Ozark, Polk, Stone, Taney, Webster & Wright Counties
Zone 5 - Benton, Henry, Hickory, Johnson, Morgan, Pettis, Saline & St. Clair Counties
Zone 6 - Adair, Audrain, Boone, Chariton, Cooper, Howard, Linn, Macon, Moniteau, Monroe, Randolph, Shelby, Schuyler, Sullivan & Putnam Counties
Zone 7 - Callaway, Camden, Cole, Gasconade, Maries, Miller, Montgomery, & Osage Counties
Zone 8 - Andrew, Atchison, Buchanan, Caldwell, Clinton, Daviess, DeKalb, Gentry, Grundy, Harrison, Holt, Livingston, Mercer, Modaway & Worth Counties
Zone 9 - St. Louis City & County, Jefferson & St. Charles Counties
Zone 10 - Franklin, Lincoln, Warren, Iron, St. Francois, Ste. Genevieve, Washington, Reynolds & Madison Counties
Zone 11 - Bollinger, Butler, Cape Girardeau, Carter, Dunklin, Mississippi, New Madrid, Oregon, Pemiscot, Perry, Ripley, Scott, Stoddard and Wayne Counties

AREAS COVERED BY ELECTRICIAN ZONES

Zone 1 - Adair, Audrain (that part of east of Highway 19), Clark, Knox, Lewis Linn, Macon, Marion, Monroe, Montgomery, Pike, Putnam, Ralls, Schuyler, Scotland, Shelby and Sullivan Counties
Zone 2 - Area bounded on the North by State Highway 92 in Platte & Clay Counties; east bya straight line from Intersection of State Highway 92 & 33 in Clay County Intersection of U.S. Highway 24 & State Highway 7 in Jackson County, south on Highway 7 to Pleasant Hill; South from Pleasant Hill due West to the Missouri - Kansas State Line; West by the Missouri - Kansas State Line. Towns of Pleasant Hill & Blue Springs are excluded
Zone 3 - Portion of Cass, Clay, Jackson and Platte Counties not included in Zone 2
Zone 4 - Bates, Benton, Henry, Johnson, Lafayette & Pettis Counties
Zone 5 - Carroll, Cooper, Morgan, Ray and Saline Counties
Zone 6 - St. Charles County, St. Louis County and City
Zone 7 - Bollinger, Butler, Cape Girardeau, Carter, Dunklin, Franklin, Iron, Jefferson, Lincoln, Madison, Mississippi, New Madrid, Pemiscot, Perry, Reynolds, Ripley, Scott, St. Francois, Ste. Genevieve, Stoddard, Warren, Washington and Wayne Counties
Zone 8 - Franklin, Jefferson, Lincoln & Warren Counties
Zone 9 - Bollinger, CapeGirardeau, Perry, Scott, St. Francois and Ste. Genevieve Counties
Zone 10 - Butler, Carter, Dunklin, Iron, Madison, Mississippi, New Madrid, Pemiscot, Ripley, Reynolds, Stoddard, Washington and Wayne Counties
Zone 11 - Christian, Dallas, Douglas, Greene, Hickory, Howell, Laclede, Oregon, Ozark, Polk, Shannon, Stone, Taney, Texas, Webster and Wright Counties
Zone 12 - Pulaski County
Zone 13 - Andrew, Buchanan, Clinton, DeKalb, Atchison, Holt, Mercer, Gentry, Harrison, Daviess, Grundy, Worth, Livingston, Nodaway, Caldwell Counties
Zone 14 - Barry, Barton, Cedar, Dade, Jasper, McDonald, Newton, St. Clair, Vernon and Lawrence Counties
Zone 15 - Audrain (except Cuivre Township), Boone, Callaway, Camden, Chariton, Cole, Crawford, Dent, Gasconade, Howard, Maries, Miller, Moniteau, Osage Phelps and Randolph Counties

AREAS COVERED BY IRONWORKERS ZONES

Zone 1 - Audrain, Boone, Callaway, Cole, Crawford, Dent, Gasconade, Maries, Montgomery, Osage, Phelps, Pike, Pulaski and Shannon Counties
Zone 2 - Buchanan, Cass, Clay, Jackson, Lafayette, Platte and Ray Counties
Zone 3 - Andrew, Atchison, Barton, Bates, Benton, Caldwell, Carroll, Cedar, Chariton, Christian, Clinton, Cooper, Dade, Dallas, Daviess, DeKalb, Gentry, Greene, Grundy, Harrison, Henry, Hickory, Holt, Howard, Johnson, Laclede, Linn, Livingston, Mercer, Moniteau, Morgan, Nodaway, Pettis, Polk, Putnam, Randolph, St. Clair, Saline, Sullivan, Vernon, Webster, and Worth Counties
Zone 4 - Barry, Jasper, Lawrence, McDonlad, Newton and Stone Counties
Zone 5 - Adair, Clark, Knox, Lewis, Macon, Marion, Schuyler, Scotland, Ralls, Monroe and Shelby Counties
Zone 6 - Ozark and Taney Counties

AREAS COVERED BY IRONWORKERS ZONES - (CONT'D)

Zone 7 - Butler, Cape, Girardeau, Dunklin, Mississippi, New Madrid, Pemiscot, Ripley, Scott, Stoddard and Wayne Counties
Zone 8 - Camden, Douglas, Howell, Laclede, Miller, Monroe, Oregon, Ralls, Texas and Wright Counties
Zone 9 - City & County of St. Louis, St. Charles, Jefferson, Franklin, Lincoln, Warren, Washington, St. Francois, Iron, Ste. Genevieve, Reynolds, Madison, Ballinger, Carter and Wayne Counties

LABORERS CLASSIFICATIONS DEFINITIONS ZONES 1 AND 2

GROUP 1 - GeneralLaborers - Carpenter tenders; salamander tenders; loading trucks under bins; hopper & conveyers; track men; all other general laborers; air tool operator;cement handler, bulk or sack; dump man on earth fill; georgie buggie man; material batch hopper man; material mixer man (except on manholes); coffer dams; riprap pavers - rock, block or brick; scaffolds over ten feet notself-supported from ground up; skipman on concrete paving; wire mesh setters on concrete paving; all work in connection with sewer, water, gas, gasoline, oil, drainage pipe, conduit pipe, tile and duct lines and all other pipe lines; power tool operator, all work in connection with hydraulic or general dredging operations; puddlers (paving only); straw blower nozzleman; asphalt plant platform man; chuck tender; crusher feeder; men handling creosote ties or creosote materials; men working with and handling epoxy material or materials (where special protection is required); topper of standing trees; batter board man on pipe and ditch work; feeder man on wood pulverizers; board and willow mat weavers and cable tiers on river work; deck hands; pile dike and revetment work; all laborers working on underground tunnels less than 25 feet where compressed air is not used; abutment and pier hole men working six (6) feet or more below ground; men working in coffer dams for bridge piers and footings in the river; ditchliners; pressure groutmen; caulker and chain or concrete saw; cliffscalers working from scaffolds, bosuns' chairs or platforms on dams or power plants over (10) feet above ground; mortarmen on brick or block manholes.
GROUP 2 - Skilled Laborers - Head pipe layer on sewer work; laser beam man; Jackson on any other similar tamp; cutting torch man; form setters; liners and stringline men on concrete paving, curb, gutters; hot mastic kettleman; hot tar applicator; sandblasting and gunite nozzlemen; air tool operator in tunnels; screed man on asphalt machine; asphalt raker; barco tamper; churn drills; air track drills and all similar drills; vibrator man; stringline man for electronic grade control; manhole builders--brick or block; dynamite and powder men; welder; grade checker on cuts and fills

LABORERS CLASSIFICATIONS DEFINITIONS ZONES 3 AND 4

GROUP 1 - General Labor-Carpenter tenders; salamander tenders; dump man; ticket takers; loading trucks under bins, hoppers, and conveyors; track man; cement handler; dump man on earth fill; georgie buggie man; material batch hopper man; spreader on asphalt machine; material mixer man (except on manholes); coffer dams; riprap pavers-rock, block or brick; scaffolds over ten feet not self-supported from ground up; skipman on concrete paving; wire mesh setters on concrete paving; all work in connection with sewer, water, gas, gasoline, oil,drainage pipe, conduit pipe, tile and duct lines and all other pipe lines; power tool operator; all work in connection with hydraulic or general dredging operations; form setters, puddlers (paving only); straw blower nozzleman; asphalt plant platform man; chuck tender; crusher feeder; men handling creosote ties or creosote materials; men working with and handlingepoxy material; topper of standing trees; feeder man on wood pulverizers, board and willow mat weavers and cable tiers on river work; deck hands; pile dike and revetment work; all laborers working on underground tunnels less than 25 ft. where compressed air is not used; abutment and pier hole men working six (6) ft. or more below ground; men working in coffer dams for bridge piers and footings in the river; barco tamper; jackson or any other similar tamp; cutting torch man; liners, curb, gutters, ditch liners; hot mastic kettleman; hot tar applicator; hand blade operator; mortar men on brick or block manholes; rubbing concrete, air tool operator under 65 lbs.; caulker and lead man; chain or concrete saw under 15 h.p.
GROUP 2 - Skilled Laborers - Vibrator man; asphalt raker; head pipe layer on sewer work; batterboard man on pipe and ditch work; cliff scalers working from bosun's chairs; scaffolds or platforms on dams or power plants over 10 ft. high; air tool operator over 65 lbs.; stringline man on concrete paving; sandblast man; laser beam man; wagon drill; churn drill; air track drill and all other similar type drills,gunite nozzle man; pressure grout man; screed man on asphalt; concrete saw 15 h.p. and over; grade checker; stringline man on electronic grade control; manhole builder; dynamite man; powder man; welder; tunnel man

AREAS COVERED BY LABORERS

Zone 1 - Buchanan, Cass and Lafayette Counties
Zone 2 - Andrew, Atchison, Barry, Barton, Bates, Benton, Caldwell, Camden, Carroll, Cedar, Christian, Clinton, Dade, Dallas, Daviess, DeKalb, Douglas, Greene,Gentry, Grundy, Harrison, Henry, Hickory, Holt, Jasper, Johnson, Laclede, Lawrence, Livingston, McDonald, Mercer, Morgan, Newton, Nodaway, Ozark, Pettis, Polk, St. Clair, Saline, Stone, Taney, Vernon, Webster, Wright and Worth Counties.
Zone 3:
a - Franklin and Jefferson Counties
b - St. Charles County
Zone 4:
a - Adair, Audrain, Bollinger, Boone, Butler, Callaway, Cape Girardeau, Carter, Chariton, Clark, Cole, Cooper, Crawford, Dent, Dunklin, Gasconade, Howard, Howell, Iron, Knox, Lewis, Linn, Macon, Madison, Maries, Marion, Miller, Mississippi, Moniteau, Monroe, New Madrid, Oregon, Osage, Pemiscot, Perry, Phelps, Pike, Pulaski, Putnam,Ralls, Randolph, Reynolds, Ripley, St.Francois, Ste. Genevieve, Schuyler, Scotland, Scott, Shannon, Shelby, Stoddard, Sullivan, Texas, Washington and Wayne Counties

AREAS COVERED BY LABORERS - (CONT'D)

Zone 4 (Cont'd):
b - Lincoln, Montgomery and Warren Counties

LABORER CLASSIFICATION DEFINITIONS - ZONE 5 - CLAY, JACKSON PLATTE AND RAY COUNTIES

Group 1 - General laborer - Carpenter tenders, salamander tenders; loading trucks under bins, hoppers and conveyors; track men and all other general laborers; air tool operator; cement handler (bulk or sack); chain or concrete saw; deck hands; dump man on earth fill; grade checkers on cuts and fills; georgia buggies man; material batch hopper man; scale man; material mixer man (except on manholes); coffer dams; abutments and pier hole men working below ground); riprap pavers rock, block or brick; signal man; scaffolds over 10 ft. not self-supported from ground up; skipman on concrete paving; vibrator man; wire mesh setters on concrete paving; all work in connection with sewer, water, gas, gasoline, oil, drainage pipe, conduit pipe, tile & duct lines and all other pipe lines; power tool operator; all work in connection with hydraulic or general dredging operations; puddlers (paving only); crusher feeder; men handling creosote ties on creosote materials; men working with and handling epoxy material or materials (where specialprotection is required); topper of standing trees; batter board man on pipe & ditch work; feeder man on wood pulverizers; board and willow mat weavers and cable tiers on river work; all laborers working on under ground tunnels where compressed air is not used

Group 2 - Skilled Laborers - Spreader or screed man on asphalt machine; asphalt raker; laser beam man; barco tamper; jackson or any other similar tamp; wagon driller, churn drills, air trackdrills and all other similar drills; cutting torch man; form setters; liners and stringline men on concrete paving, curb, gutters and (etc.); hot mastic kettleman; hot tar applicator; hand blade operators; mortar men on brick or block manholes; sandblasting and gunnite nozzlemen; rubbing concrete; air tool operator in tunnels; head pipe layer on sewer work; manhole builder (brick or block); dynamite and powder men; welder

AREA COVERED BY LINE CONSTRUCTION

Zone 1 - Bates, Benton, Carroll, Cass, Clay, Henry, Johnson, Jackson, Lafayette, Pettis, Platte, Ray and Saline Counties
Zone 2 - Andrew, Atchinson, Barry, Barton, Buchanan, Caldwell, Cedar, Christian, Clinton, Dade, Dallas, Daviess, DeKalb, Douglas, Gentry, Greene, Grundy, Harrison, Hickory, Holt, Jasper, Laclede, Lawrence, Livingston, McDonald, Mercer, Newton, Modaway, Ozark, Polk, St. Clair, Stone, Taney, Vernon, Webster, Worth and Wright Counties
Zone 3 - Crawford, Franklin, Iron, Jefferson,Reynolds, St. Charles, St. Francois, St. Louis and City, Washington, Adair, Audrain, Boone, Callaway, Camden, Carter, Chariton, Clark, Cole, Cooper, Dent, Gasconade, Howard, Howell, Knox, Lewis, Lincoln, Linn, Macon, Maries, Marion, Miller, Moniteau, Monroe, Montgomery, Morgan, Oregon, Osage, Perry, Phelps, Pike, Pulaski, Putnam, Ralls, Randolph, Ripley, Ste. Genevieve, Schuyler, Scotland, Shannon, Shelby, Sullivan, Texas and Warren Counties

AREA COVERED BY LINE CONSTRUCTION (CONT'D)

Zone 4 - Bollinger, Butler, Cape Girardeau, Dunklin, Madison, Mississippi, New Madrid, Pemiscot, Scott, Stoddard and Wayne Counties
Zone 5 - Atchison, Modaway, Worth, Harrison, Mercer, Holt, Andrew DeKalb, Davies, Grundy, Buchanan, Clinton, Caldwell, Livingston, Platte, Clay, Ray, Carroll, Jackson, Lafayette, Saline, Cass, Johnson, Pettis, Bates, Henry, Vernon, Benton, St. Clair, Hickory, Barton, Cedar, Polk, Dallas, Laclede, Jasper, Dade, Lawrence, Greene, Webster, Wright, Newton, McDonald, Barry, Stone, Christian, Douglas, Taney, Ozark and Gentry Counties
ZONE 6 - Adair, Audrain, Boone, Callaway, Camden, Carter, Chariton, Clark, Cole, Cooper, Crawford, Dent, Franklin, Gasconade, Howard, Howell, Iron, Jefferson, Knox, Lewis, Lincoln, Linn, Macon, Maries, Marion, Miller, Moniteau, Monroe, Montgomery, Morgan, Oregon, Osage, Perry, Phelps, Pike, Pulaski, Putnam, Ralls, Randolph, Reynolds, Ripley, St. Charles, St. Francois, St. Louis and City, Ste. Genevieve, Schuyler, Scotland, Shannon, Shelby, Sullivan, Texas, Warren and Washington Counties
ZONE 7 - Atchison, Modaway, Worth, Harrison, Mercer, Holt, Andrew, DeKalb, Daviess, Grundy, Buchanan, Clinton, Caldwell, Livingston, Platte, Clay, Ray, Carroll, Jackson, Lafayette, Saline, Cass, Johnson, Pettis, Bates, Henry, Benton, Vernon, St. Clair, Hickory, Barton, Cedar, Polk, Dallas, Laclede, Jasper, Dade, Lawrence, Greene, Webster, Wright, Newton, McDonald, Barry, Stone, Christian, Douglas, Taney, Ozark, Gentry Counties

AREA COVERED BY PAINTERS

Zone 1 - Bates, Caldwell, Carroll, Clinton, Cass, Clay, Daviess, Grundy, Henry, Harrison, Jackson, Johnson (excluding Whiteman Air Force Base, Lafayette, Livingston, Mercer, Platte and Ray Counties
Zone 2 - Bollinger, Cape Girardeau, Dunklin, Mississippi, New Madrid, Pemiscot, Scott, Stoddard, Reynolds, Iron,Butler, Carter, Shannon, Wayne, Oregon, Ripley, Ste. Genevieve, St.Francois, Perry, Washington, & Madison Counties
Zone 3 - Camden, Crawford, Dent Laclede, Maries, Miller, Phelps, Pulaski and Texas Counties
Zone 4 - Benton, Cooper, Moniteau, Morgan, Pettis and Saline Counties
Zone 5 - Andrew, Atchinson, Buchanan, DeKalb, Gentry, Holt, Modaway,& Worth Counties
Zone 6 - Barry, Barton, Cedar, Dade, Jasper, Lawrence, McDonald, Newton, St. Clair and Vernon Counties
Zone 7 - Adair, Audrain, Boone, Callaway, Chariton, Cole, Gasconade, Howard, Monroe, Montgomery, Linn, Osage Scotland and Randolph Counties
Zone 8 - Jefferson, St. Charles, St. Louis & City, Warren, Lincoln, Pike and Franklin Counties
Zone 9 - Christian, Dallas, Douglas, Greene, Hickory, Howell, Ozark, Polk, Stone, Taney, Webster andWright Counties
Zone 10 - Clark, Lewis, Marion, and Ralls Counties.

CLASSIFICATION DEFINITIONS

Power Equipment Operators Zone 1

Group I - Asphalt paver and spreader; asphalt plant console operator; auto grader; backhoe; blade operator, alltypes; boilers-2; boring machine (truck or crane mounted); bulldozer operator; clamshell operator; compressor maintenance operator-2; concrete plant operator, central mix; concrete mixer paver; crane operator, derrick or derrick-trucks; ditching machine; dragline operator; dredge engineman; dredge operator; drill-cat with compressor mounted on cat; drilling or boring machine, rotary, self-propelled; high loader-fork lift; hoisting engineer-2 active drums; locomotive operator, standard guage; mechanics and welders, field; maintenance operator; mucking machine; pile driver operator; pitman crane operator; pump-2; pushcat operators; quad-trac; scoop operator- all types; scoops in tandem; self-propelled rotary drill (leroy or equal-not air trac); shovel operator; side discharge spreader; sideboom cats; skimmer scoop operator; slipform paver (CMI, REX or Equal); throttle man; truck crane; welding machine maintenance operator-2

Group II - "A" frame truck; asphalt hot mix silo; asphalt plant fireman, drum or boiler; asphalt plant mixer operator; asphalt plant man; asphalt roller operator; backfiller operator; chip spreader; concrete batch plant, dry-power operated; concrete mixer operator, skip loader; concrete pump operator; crusher operator; elevating grader operator; greaser; hoisting engine-1 drum; LaTourneau rooter; multiple compactor; pavement breaker, self-propelled, of the hydra-hammer or similar type; power shield; pub mill operator; stump cutting machine; towboat operator; tractor operator-over 50 HP

Group III - Boilers-1; chip spreader (front man); churn drill operator; compressor maintenance operator-1; concrete saws, self-propelled; conveyoroperator; distributor operator; finishing machine operator; fireman, rig; float operator; form grader operator; pump; pump maintenance operator, other than dredge; roller operator, other than high type asphalt; screening and washing plant operator; self-propelled street broom or sweeper; siphons and jets; subgrading machine operator; tank car heater operator - combination boiler and booster; tractor, 50 HP or less, without attachments; vibrating machine operator, not hand; welding machine maintenance operator-1

Group IV:
(a) Oilers
(b) Oiler driver, (all types)

FOOTNOTE:
HOURLY PREMIUMS
FOLLOWING CLASSIFICATIONS SHALL RECEIVE $.25) ABOVE GROUP I RATE
Clamshells - 3 yd. capacity or over - crane or rigs, 80 ft. boom or over (including jib) - draglines, 3 yd. capacity or over - piledrivers, 80 ft. of boom or over (including jib) - shovels & backhoes, 3 yd. capacity or over

Power Equipment Operators Zone 2

Group I - Backhoe; cableway; crane, crawler or truck; crane, hydraulic-truck or cruiser mounted - 16 tons & over; crane locomotive; derrick, steam; derrick car & derrick boat; dragline; dredge; gradall, crawler or tire mounted; locomotive, gas, steam & other powers; pile driver, land or floating; scoop, skimmer; shovel, power (steam, gas, electric, or other powers); switch boat; whirley

Group II - air tuggerw/air compressor; anchor-placing barge; asphalt spreader; athey force feeder loader (self-propelled); backfilling machine; boat operator-push boat or tow boat (jobsite); boiler, high pressure breaking in period; boom truck, placing or erecting; boring machine, footing foundation; bullfloat; cherry picker; combination concrete hoist & mixer (such as mixermobile); compressors, two, not more than 50 ft. apart; compressor (when operator runs throttle); compressor-generator combination, compressor-pump combination; generators, two 30 KW or over, or any number developing over 30 KW; generator-pump combination; compressor-welder combination; concrete breaker (truck or tractor mounted); concrete pump, such as pump-crete machine; concrete spreader; conveyor, large (not self-propelled), hoisting or moving brick and concrete into, or into and on floor level, one or both; crane, hydraulic-rough terrain, self-propelled; crane hydraulic-truck or cruiser mounted-under 16 tons; drilling machines,self-powered, used for earth or rock drilling or boring (wagon drills and any hand drills obtaining power from other sources including concrete breakers,jackhammers and barco equipment - no engineer required); elevating grader; engineman, dredge; excavator or powerbelt machine; finishing machine, self-propelled oscillating screed; forklift; grader, road with power blade; highlift; hoist; concrete and brick (brick cages or concrete skips operating in or on tower, towermobile, or similar equipment); hoist; stack; hydro-hammer; lad-a-vator, hoisting brick or concrete; loading machine (such as barber-greene); mechanic, on job site; mixer, paving; mixer-mobile; mucking machine; pipe cleaning machine; pipe wrapping machines; plant asphalt; plant, concrete producing or ready-mix job site; plant heating-job site; plant mixing-job site; plant power, generating-job site; pumps, two self-powered over 2" through 6"; pumps, electric submersible, one through three, over 4"; quad-track; roller, asphalt, top or sub-grade; scoop, tractor drawn; spreader box; sub-grader; tie tamper; tractor-crawler, or wheel type with or without power unit, power take-offs, and attachments regardless of size; trenching machine; tunnel boring machine; vibrating machine automatic, automatic propelled; welding machines (gasoline or diesel) more than one but not over four (regardless of size); well drilling machine

Group III - Conveyor, large (not self-propelled); conveyor, large (not self-propelled) moving brick and concrete (distributing) on floor level; mixer two or more mixers of one bag capacityor less, air tugger w/plant air; boiler, for power or heating on construction projects; boiler, temporary; compressor, air-one; compressor air (mounted on truck; concrete saw, self-propelled;curb finishing machine; ditch paving machine; elevator (building construction or alteration); endless chain hoist; form grader; generator, one over 30 KW or any number developing over 30 KW; greaser; hoist; one drum regardless of size (except brick or concrete); lad-a-vator, other hoisting; manlift; mixer, asphalt, over 8 cu. ft. capacity, mixer, if two or more mixers of one bag capacity or less are

Group III - (Cont'd):
used by one employer on job an operator is required; mixer, with outside loader, 2 bag capacity or more; mixer, with side loader,regardless of size, not paver; oiler on dredge; oiler on truck crane pug mill operator; pump, sump-self-powered, automatic controlled over 2" during use in connection with construction work; sweeper, street; welding machine, one over 400 amp.; winch operating from truck; scissor lift (used for hoisting); tractor, small wheel type 50 h.p. & under with grader blade & similar equipment
Group III(a) - Truck crane and dredge
Group IV - Boat operator-outboard motor (job site); conveyor (such as con-vay-it) regardlessof how used; oiler; sweeper, floor
Group IV(a) - Crawler type
Group V - (a) Air pressure, oiler engineer, operating under ten pounds (b) air pressure, oiler engineer operating over ten pounds (c) air pressure engineer operating under ten pounds (d) air pressure engineer operating over ten pounds (e) crane-piledriving and extracting; crane using rock socket tool; dragline - 7 cu. yds. & over; shovel, power - 7 cu. yds. and over; crane, climbing such as Linden); derrick, diesel, gas or electric hoisting material and erecting steel - 150' or more above ground; hoists, three or more drums; scoop,tandem; tractor, tandem crawler

Crane with boom (including jib), over 100' from pin to pin (add 1¢ per foot to maximum of $2.00) above basic rate for crane

Work in tunnel or tunnel shaft, .50¢ above base rate

Power Equipment Operators Zones 3, 4 and 8

Group I - Asphalt finishing machine & trench widening spreader, asphalt plant console operator; autograder; automatic slipform paver; back hoe; blade operator - all types; boat operator - tow; boiler - 2; central mix concrete plant operator; clam shell operator; concrete mixer paver; crane operator; derrick or derrick trucks; ditching machine; dozer operator; dragline opr.; dredge booster pump ;dredge engineman; dredge operator; drill cat with compressor mounted on cat; drilling or boring machine rotary self-propelled; highloader; hoisting engine - 2 active drums; launch-hammer wheel; locomotive operator- standard guage; mechanics and welders; mucking machine; piledriver operator; pitman crane operator; push cat operator; quad-trac; scoop operator; sideboom cats; skimmer scoop operator; trenching machine operator; truck crane, shovel operator
Group II - A-Frame; asphalt hot-mix silo; asphalt roller operator; asphalt plant fireman (drum or boiler); asphalt plant man; asphalt plant mixer operator; backfiller operator; barber-greene loader; boat operator (bridge & dams); chip spreader; concrete mixer operator - skip loader; concrete plant operator; concrete pump operator; dredge oiler; elevating grader operator; fork lift; grease fleet; hoisting engine - 1; locomotive operator - narrow guage; multiple compactor; pavement breaker; powerbroom-self-propelled; power shield; rooter; slip-form finishing machine; stumpcutter machine; side discharge concrete spreader; throttleman; tractor operator (over 50 hp); winch truck; asphalt roller operator; crusher operator

Group III - Spreader box operator, self-propelled (not asphalt; tractor operator (50 h.p. or less); boilers - 1; chip spreader (front man); churn drill operator; compressor over 105 CFM 2 - 3 pumps 4" & over; 2-3 light plant 7.5 KWA or any combination thereof; clef plane opr.; compressor maintenance operator 2 or 3; concrete saw operator (self-propelled); curb finishingmachine; distributor operator; finishing machine operator; flex plane operator; float operator; form grader operator; pugmill operator; roller operator, other than high type asphalt; screening & washing plant operator; siphons & jets; subgrading machine operator; tank car heater (combination boiler & booster); ulmac, ulric or similar spreader; vibrating machine operator; hydrobroom
Group IV - Oiler; grout machine; oiler-driver; compressor over 105 CFM-1; conveyor operator - 1; maintenance operator; pump - 4" & over - 1

FOOTNOTE:
HOURLY PREMIUMS
FOLLOWING CLASSIFICATIONS SHALL RECEIVE ($.25) ABOVE GROUP I RATE
Crane with 3 yds. & over buckets; dragline operator - 3 yds. & over; shovel - 3 yds. & over; piledrivers - all types; clamshell - 3 yds. & over; hoists - each additional active drum over 2 drums

FOLLOWING CLASSIFICATION SHALL RECEIVE ($.50) ABOVE GROUP I RATE
Tandem scoop operator

Crane, rigs over 100 feet (incl. jib) - 1¢ per foot
Power Equipment Operators Zones 5, 6 & 7

Group I - Asphalt finishing machine & trench widening spreader; asphalt plant console operator; automatic slipform paver; autograder; backhoe; blade operator, - all types; boat operator - tow; boilers - 2; central mix concrete plant operator; clamshell operator; concrete mixer paver; crane operator; derrick or derrick trucks; ditching machine; dozer operator; dragline operator; dredge booster pump; dredge engineman; dredge operator; drill cat with compressor mounted on cat; drilling or boring machine rotary self-propelled; highloader; hoisting engine - 2 active drums; launch hammer wheel; locomotive operator; - standard guage; mechanics and welder; mucking machine; piledriver operator; sideboom cats; skimmer scoop operators; trenching machine operator; truck crane; scoop operators - all types

Group II - A-frame; asphalt hot mix silo; asphalt plant fireman (drum or boiler); asphalt roller operator; asphalt plant man; asphalt plant mixer operator, backfiller operator; barber-greene loader; boat operator (bridges and dams); chip spreader; concrete mixer operator - skip loader; concrete plant operator; concrete pump operator; crusher operator; dredge oiler; elevating grader operator; fork lift; greaser-fleet; hoisting engine - 1; locomotive operator - narrow guage; multiple compactor, pavement breaker; power - broom - self-propelled; power shield; rooter; slip form finishing machine; stumpcutter machine; side discharge concrete spreader; throttle man; tractor operator (over 50 hp); winch truck

POWER EQUIPMENT OPERATORS - ZONES 5,6, & 7 (CONT'D)

GROUP III - Boilers - 1; chip spreader (front man); churn drill operator; clef plane operator; concrete saw operator (self-propelled); curb finishing machine; distributor operator; finishing machine operator; flex plane operator; float operator; form grader operator; pugmill operator; roller operator, other than high type asphalt; screening & washing plant operator; siphons & jets; subgrading machine operator; spreader box operator, self-propelled (not asphalt); tank car heater operator; (combination boiler & booster); ulmac, ulric, or similar spreader; vibrating machine operator, not hands; tractor operator (50 hp or less)
GROUP IV - Oiler; oiler driver

FOOTNOTE:
HOURLY PREMIUMS
FOLLOWING CLASSIFICATIONS SHALL RECEIVE ($.25) ABOVE GROUP I RATE
DRAGLINE operator - 3 yds. & over; shovel - 3 yds. & over; clamshell - 3 yds. & over; crane, rigs or piledrivers, 100' of boom or over (incl. jib.), hoists - each additional active drum over 2 drums

FOLLOWING CLASSIFICATIONS SHALL RECEIVE ($.50) ABOVE GROUP I RATE
Tandem scoop operator; crane, rigs or piledrivers 150' to 200' of boom (incl. jib.)

FOLLOWING CLASSIFICATIONS SHALL RECEIVE ($.75) ABOVE GROUP I RATE
Crane rigs, or piledrivers 200 ft. of boom or over (incl. jib.)

AREAS COVERED BY POWER EQUIPMENT OPERATORS ZONES

ZONE 1 - Clay, Jackson, Platte and Ray Counties
ZONE 2 - St. Louis City and County
ZONE 3 - Franklin, Jefferson, St. Charles Counties
ZONE 4 - Adair, Audrain, Boillinger, Boone, Butler, Callaway, Cape Girardeau, Carter, Clark, Cole, Crawford, Dent, Dunklin, Gasconade, Howell, Iron, Knox, Lewis, Macon, Madison, Maries, Marion, Miller, Mississippi, Moniteau, Monroe, Montgomery, Morgan, New Madrid, Oregon, Osage, Pemiscot, Perry, Phelps, Pike, Pulaski, Putnam, Ralls, Randolph, Reynolds, Ripley, St. Francois, Ste. Genevieve, Schuyler, Scotland, Scott, Shannon, Shelby, Stoddard, Texas, Washington, and Wayne Counties
ZONE 5 - Buchanan, Cass, Clinton and Lafayette Counties
ZONE 6 - Andrew, Atchinson, Bates, Benton, Caldwell, Carroll, Charlton, Cooper, Daviess, DeKalb, Gentry, Grundy, Harrison, Henry, Holt, Howard, Johnson, Linn, Livingston, Mercer, Nodaway, Pettis, Saline, Sullivan and Worth Counties
ZONE 7 - Christian, Greene, Jasper, Lawrence, Taney, Barry, Barton, Camden, Cedar, Dade, Dallas, Douglas, Hickory, Laclede, McDonald, Newton, Ozark, Polk, St. Clair, Stone, Vernon, Webster and Wright Counties
ZONE 8 - Lincoln and Warren Counties

TRUCK DRIVER CLASSIFICATION DEFINITIONS

ZONE 1

Group 1 - Mechanics & Welders-field
Group 2 - A-frame low boy-boom truck driver

Group 3 - Insley wagons; dump trucks, excavating, 5 cu. yds. and over; dumpsters; half-tracks; speedace; euclids and similar excavating equipment material trucks, tandem two teams; semi-trailers; winch-truck-fork trucks; distributor drivers and operators; agitator and transit mix; tank wagon drivers, tandem or semi
Group 4 - One team; station wagons; pickup truck; material trucks, single axle, tank wagon drivers, single axle
Group 5 - Oilers and greasers-field

ZONES 2, 3, 4, 5 & 6

Group 1 - Flat bed trucks - single axle; station wagon; pickup trucks; material trucks - single axle; tank wagon - single axle
Group 2 - Flat bed trucks - tandem axle; material trucks, tandem axle; tank wagon - tandem axle
Group 3 - Semi and/or pole trailers; winch fork and steel trucks; Insley wagons, dumpsters, half tracks, speedace, euclids, and other similar equipment, a-frame and derrick trucks, float or low boy distributor drivers and operators, tank wagon, semi-trailer
Group 4 - Agitator and transit mix truck
Group 5 - Warehousemen

AREA COVERED BY TRUCK DRIVER ZONES

ZONE 1 - Clay, Jackson, Platte & Ray Counties
ZONE 2 - Franklin, Jefferson and St. Charles Counties
ZONE 3 - Lincoln and Warren Counties
ZONE 4 - Buchanan, Cass, Johnson and Lafayette Counties
ZONE 5 - Andrew, Audrain, Barton, Bates, Benton, Bollinger, Boone, Caldwell, Callaway, Camden, Cape Girardeau, Carroll, Carter, Cedar, Chariton, Christian, Clinton, Cole, Cooper, Crawford, Dade, Dallas, Daviess, DeKalb, Dent, Douglas, Gasconade, Greene, Henry, Hickory, Howard, Iron, Jasper, Laclede, Lawrence, Linn, Livingston, Macon, Maidson, Maries, Marion, Miller, Mississippi, Moniteau, Monroe, Montgomery, Morgran, New Madrid, Newton, Osage, Pemiscot, Perry, Pettis, Phelps, Pike, Polk, Pulaski, Ralls, Randolph, Reynolds, St. Clair, St. Francois, Ste. Genevieve, Saline, Scott, Shannon, Shelby, Stoddard, Texas, Vernon, Washington, Wayne, Webster and Wright Counties
ZONE 6 - Adair, Atchinson, Perry, Butler, Clark, Dunklin, Gentry, Grundy, Harrison, Holt, Howell, Knox, Lewis, McDonald, Mercer, Nodaway, Oregon, Ozark, Putnam, Ripley, Schuyler, Scotland, Stone, Sullivan, Taney and Worth Counties
ZONE 7 - St. Louis City and County

SUPERSEDEAS DECISION

STATE: Nebraska COUNTY: Lancaster
DECISION NO.: NE85-4004 DATE: Date of Publication
Supersedes Decision No. NE80-4100 dated December 12, 1980, in 45 FR 81980
DESCRIPTION OF WORK: Residential projects, consisting of single family homes and apartments up to and including 4 stories.

	Basic Hourly Rates	Fringe Benefits
AIR CONDITIONING MECHANICS	$ 8.00	
CARPENTERS	8.30	
CEMENT MASONS/FINISHERS	8.56	
DRYWALL WORK:		
Finishers & Tapers	7.57	
Stockers, Haulers, Scrapers	6.40	
Sheet Rock Hangers	9.00	
ELECTRICIANS	7.93	
INSULATORS	6.75	
LABORERS	6.12	
PAINTERS	7.57	
PLUMBERS/PIPEFITTERS	9.00	
ROOFERS	7.73	
SHEET METAL WORKERS	$ 8.59	
TRUCK DRIVERS	6.92	
POWER EQUIPMENT OPERATORS:		
Tractor Operator	6.75	
Backhoe Operator	8.17	
Bulldozer Operator	8.98	
Roller	9.18	
Grader	9.93	
Front-End-Loader	9.12	
Scraper	10.00	

Unlisted classifications needed for work not included within the scope of the classifications listed may be added after award only as provided in the labor standards contract clauses (29 CFR, 5.5(a)(1)(ii)).

[FR Doc. 85-8651 Filed 4-11-85; 8:45 am]

BILLING CODE 4510-27-C

federal register

Friday
April 12, 1985

Part IV

Department of Transportation

National Highway Traffic Safety Administration

49 CFR Parts 571, 572, and 585

Federal Motor Vehicle Safety Standards for Occupant Crash Protection; Notices of Proposed Rulemaking and Denials of Petitions for Rulemaking

DEPARTMENT OF TRANSPORTATION

National Highway Traffic Safety Administration

49 CFR Part 571

[Docket No. 74-14; Notice 37]

Federal Motor Vehicle Safety Standards for Occupant Crash Protection; Improvement of Seat Belt Assemblies

AGENCY: National Highway Traffic Safety Administration (NHTSA), DOT.

ACTION: Notice of proposed rulemaking; response to petitions for reconsideration.

SUMMARY: On January 8, 1981, NHTSA amended Standard No. 208, *Occupant Crash Protection*, to specify additional performance requirements for both manual and automatic safety belt assemblies installed in motor vehicles with a Gross Vehicle Weight Rating (GVWR) of 10,000 pounds or less, to promote the installation of convenient and comfortable belt assemblies. Petitions for reconsideration of these new performance requirements were received from seven vehicle manufacturers. The purpose of this notice is to propose modifications to certain aspects of the comfort and convenience performance requirements in orders to clarify the agency's intent and to address the concerns raised in the petitions. The notice also proposes to change the effective date of the comfort and convenience requirements to September 1, 1986, to coincide with the effective date of the Department's July 11, 1984, rule requiring the installation of automatic restraints.

ADDRESS: Docket Section, Room 5109, National Highway Traffic Safety Administration, 400 Seventh Street, SW., Washington, D.C. 20590. The Docket is open 8 a.m. to 4 p.m., Monday through Friday.

DATES: Proposed effective date is September 1, 1986; comments must be received by May 28, 1985.

FOR FURTHER INFORMATION CONTACT: Mr. Robert Nelson, Office of Vehicle Safety Standards, National Highway Traffic Safety Administration, 400 Seventh Street, SW., Washington, D.C. 20590 (202-426-2264).

SUPPLEMENTARY INFORMATION: On January 8, 1981, NHTSA amended Safety Standard No. 208, *Occupant Crash Protection* (49 CFR 571.208), to specify additional performance requirements to promote the comfort and convenience of both manual and automatic safety belt systems installed in motor vehicles with a GVWR of 10,000 pounds or less (46 FR 2064). The final rule included specifications relating to the following aspects of seat belt performance and design: Latchplate accessibility; seat belt guides; adjustable buckles for certain belts; shoulder belt pressure; convenience hooks; belt retraction; and comfort devices. Type 2 manual belts (lap and shoulder combination belts) installed in front seating positions in passenger cars were excepted from these additional performance requirements, since it was assumed such belts would be phased out in passenger cars as the automatic restraint requirements of Standard No. 208 became effective.

Seven petitions for reconsideration of the January 8, 1981, amendment were received from the following vehicle manufacturers: American Motors Corporation, General Motors Corporation, Volkswagen of America, Inc., Ford Motor Company, Chrysler Corporation, Renault U.S.A., and Daimler-Benz AG. On February 18, 1982, the agency issued a partial response to the petitions for reconsideration by extending the effective date of the comfort and convenience requirements for one year, from September 1, 1982, to September 1, 1983 (47 FR 7254). Subsequently, the agency proposed (47 FR 51432) and then adopted (48 FR 24717), a further extension of the effective date for the requirements until September 1, 1985.

Correlation to Belt Use

A majority of the manufacturers which submitted petitions for reconsideration questioned the basic correlation between seat belt comfort and convenience and seat belt use. The agency has considered these objections, but continues to believe that seat belt assemblies that are comfortable to wear and convenient to use will tend to enhance seat belt use. Various studies have concluded that safety belt comfort and convenience play an important role in whether people use the belts installed in their vehicles (DOT HS-801-594; DOT-HS-803-570; DOT-HS-805-702; DOT-HS-805-165; "An Analysis of the Factors Affecting Seat Belt," 1977). Some of the problems identified in these studies include: many belts are difficult to reach; many belts do not fit properly (e.g., they cross the occupant's neck); the pressure of many shoulder belts is felt to be excessive, many belts are difficult to buckle; and some belts become too tight after they have been worn for several minutes and their users have moved around.

The agency continues to believe that certain of the performance requirements included in the final rule will help to eliminate the most significant of the above-mentioned problems. While it may be true that comfortable and convenient safety belts may not, in and of themselves, induce higher use rates, uncomfortable or inconvenient safety belts are very likely to discourage continued use by people who are induced to try wearing belts. Thus, the agency believes that comfortable and convenient safety belts are important to support its program to increase safety belt use in the U.S. Therefore, petitioners' requests that the seat belt comfort and convenience requirements be eliminated entirely are denied.

Although the agency has determined that the comfort and convenience requirements should not be eliminated, it has decided upon reconsideration that certain changes should be considered in response to petitioners' concerns. A discussion of the requested changes for each of the individual specifications is set forth below, together with the modifications that are being proposed by this notice. (For a complete understanding of the performance requirements discussed in this notice, including the relationship of the requirements to seat belt comfort and convenience, interested persons should refer to both the notice of proposed rulemaking (44 FR 77210, December 31, 1979) and the final rule (46 FR 2064, January 8, 1981) preceding this notice.)

Automatic Locking Retractors

Paragraph S7.1.1.3 of Standard No. 208 was amended in the January 8, 1981, final rule to specify that certain lap belts installed in front outboard seating positions are required to have an emergency-locking retractor rather than an automatic locking retractor (which was previously allowed as an option). Automatic locking retractors are inconvenient to use since they must be extended in a single continuous movement to a length sufficient to allow buckling or they will lock. They also tend to tighten excessively under normal driving conditions, sometimes making it necessary to unbuckle and refasten the lap belt to relieve pressure on the pelvis and abdomen. Neither of these problems exists with the emergency locking retractor, which allows occupant movement without tightening and which locks only upon vehicle impact.

The agency is, however, concerned that the use of child restraints in the front outboard passenger position could result in the child restraint sliding out of position during pre-crash vehicle maneuvering or braking if the retractor cannot be locked manually. Some data

from the agency's latest testing (Contract No. DTNH 22-83-C-06010) indicate that excessive spool-out of the lap belt occurs before the retractor locks. This, together with the child restraint being moved out of position due to vehicle maneuvering or the child's movement in the restraint, could greatly reduce the effectiveness of the child restraint. While it is the agency's position that children should be placed in child restraints in the rear seats since crash statistics indicate that the rear seat is a safer environment during a crash, it is recognized that many people will continue to use child restraints in the front passenger's position in spite of that fact. Therefore, the agency is proposing that Type 1 seat belts or the lap belt portion of Type 2 belts that are adjusted for length by an emergency locking retractor in any designed seating position other than the driver's position, shall be equipped with a locking means to permit secure restraint of child restraint devices.

The agency is aware of devices that are currently installed on or will be available in the market place that permit compliance with the proposal. One such device is the adjustable (locking) "D"-ring that is on many domestic models. Another is an emergency locking retractor that will convert to an automatic locking retractor by overt action and then revert back to an emergency locking retractor when the buckle is released. The agency currently permits the use of a manual adjustment device capable of causing the emergency locking retractors that adjust the lap belt to lock when the belt is buckled, for seating positions other than the front designated seating position. In sum, there are several means currently available to meet the intent of the proposed requirements and the agency believes that users of child restraint devices should be able to securely restrain the devices in the vehicle.

One manufacturer's petition for reconsideration questioned whether paragraph S7.1.1.3 referred only to Type 1 belts (lap belts) or also to the lap belt portion of a Type 2 belt (combination lap and shoulder belt). The requirement was intended to apply to Type 1 belts (in front outboard seating positions), including those installed in passenger cars, and to the lap belt portion of Type 2 belts (in front seating positions) in vehicles other than passenger cars. The reason for the latter application is that the problems associated with automatic locking retractors are equally bothersome in Type 2 belts. An amendment to paragraph S7.1.1.3 is proposed in this notice to clarify these points.

The agency is also proposing a change to paragraph S7.1.1.3 to clarify that the requirement only applies to lap belts that are installed in vehicles for compliance with the standard. Thus, a Type 1 lap belt that is installed in a passenger car in conjunction with an air bag, in order to meet the lateral and rollover requirements of the standard, would be required to have an emergency locking retractor. However, a Type 1 lap belt installed by a manufacturer in conjunction with a single diagonal automatic belt would not have to have an emergency locking retractor since the single diagonal automatic belt would fully meet the belt requirements of the standard by itself.

American Motors Corporation asked in a letter (although not in its petition for reconsideration) whether the requirements of S7.1.1.3 apply to open-body vehicles. The agency did not intend to exclude open-body vehicles from this requirement; however, the agency requests comments on whether such vehicles should be excluded.

One manufacturer also asked whether paragraph S7.1.1.4 was intended to preclude the use of automatic locking retractors in rear seating positions in vehicles. The answer to that question is no. Manufacturers may install either type of retractor, however, if an emergency locking retractor is provided, a locking means to permit child restraint devices to be securely restrained would be required as specified in S7.1.1.5.

Convenience Hooks for Automatic Belts

Some automatic belt design plans include a manual "convenience hook" which would enable occupants manually to stow the belt webbing totally out of the way as they are about to exit the vehicle. Paragraph S7.4.1 of the final rule was included to ensure that such convenience hooks would not affect compliance with the automatic restraint requirements. Automatic belts installed for compliance with the injury criteria of FMVSS 208 were intended to operate without requiring any manual procedures by the vehicle occupant. Thus, manual hooks could not be a necessary component to move the belt webbing out of the occupant's way since this would defeat the automatic aspect of performance. Paragraph S7.4.1 currently provides that any such hook must automatically release the belt webbing prior to the car being driven.

Ford requested that clarifying language be included in S7.4.1 to make it clear that convenience hooks are intended to stow seat belt webbing of operational automatic belts to increase the ease of entering or exiting the vehicle. Ford stated that they are evaluating automatic belt designs that employ a retainer that stows the inboard latchplate when the latchplate is disengaged by actuation of the emergency release. This protrusion prevents the latchplate and associated webbing from falling on the ground and becoming soiled when the door is opened. Ford requests that S7.4.1 be revised to make it clear that the convenience hook need release the webbing only when the automatic belt is otherwise operational.

Ford pointed out that this section requires that convenience hooks on vehicles must release when the ignition switch is in the "on" or "start" position and the vehicle's drive train is engaged. Alternatively, at the manufacturer's option, for vehicles with manual transmissions only, this release may occur when the ignition switch is in the "on" or "start" position and the vehicle's parking brake is in the released mode. Ford believes that the alternative release option should apply to all vehicles with convenience hooks, no matter what type of transmission is installed in the vehicle. The intent of S7.4.1 is to cause convenience hooks to release the automatic belt webbing at the beginning of vehicle movement. Permitting automatic transmission-equipped vehicles to employ the optional method for convenience hook release (when the parking brake is in the released mode) will provide additional design flexibility for vehicle manufacturers while achieving the timely release of the convenience hooks.

The agency agrees with the points raised by Ford and, accordingly has proposed revised language in S7.4.1 to reflect the requested changes.

Webbing Tension-Relieving Devices

Some seat belt designs include devices intended to relieve shoulder belt pressure. These "window-shade" mechanisms or other tension-relieving devices can reduce the effectiveness of belts in crash situations where excessive slack has been introduced in the belt webbing. Paragraph S7.4.2 was added to Standard No. 208 in the final rule to specify that any such tension-relieving devices may be used on sutomatic belt systems only if the system would comply with the injury criteria of the standard with the device adjusted to any possible position. The notice of proposed rulemaking preceding the final rule would have banned tension-relieving devices outright. The final form of S7.4.2 was in recognition of the fact that such devices can greatly

accommodate belt fit and can increase belt comfort in certain circumstances, and was intended to allow manufacturers wider latitude in designing automatic belts.

Several manufacturers objected to the wording of S7.4.2 on the basis that the belt system would have to meet the injury criteria even when the device had been used to produce excessive slack in order, essentially, to defeat the system. As the requirement was written, the result suggested by these comments is correct. The agency did intend to require that the belt system meet the injury criteria in any position to which it could be adjusted, even if such a usage was not intended by the manufacturer.

Upon reconsideration of this position, however, the agency has tentatively determined that this requirement is unduly stringent and would effectively preclude the use of tension-relieving devices altogether. The agency believes that the added potential to improve belt fit and the added comfort of these devices is desirable in certain circumstances since it could operate to enhance proper belt use.

The use of tension relievers could enable a manufacturer to provide for user comfort while permitting the decision about the location of automatic seat belt anchorages to be based soley on safety performance considerations. For example, one manufacturer noted that automatic seat belt anchorages located on the front doors will be used to comply with the standard. Since this manufacturer states that belt effectiveness in crashes is the most important of the many criteria which must be considered in the design of seat belt systems, the specific location of anchorages will be determined on the basis of test dummy kinematics and injury criteria performance. These criteria could cause the upper shoulder belt anchorage to be placed in the upper rear corner of the door. On some models, this could cause the shoulder belt to be in close proximity to the neck of some occupants and could result in chafing under certain conditions. Trying to correct this condition by relocating the anchorage could compromise the level of protection provided by the seat belt. Other than undertaking extensive and extremely costly redesign of certain vehicles, the only means of fitting all possible users, in addition to movable anchorages which are already permitted by FMVSS 210, is to incorporate a tension-relieving device so that a small amount of slack can be introduced in order to move the belt webbing off the occupant's neck.

The agency understands the problem of trying to provide for the comfort of a wide range of sizes of vehicle occupants, but at the same time recognizes that excessive slack could compromise belt effectiveness. On balance, the agency believes that it is not necessary to prohibit tension-relievers at this time and therefore is proposing to reword paragraph S7.4.2 so that such devices are not prohibited simply because of the possibility that they might be misused by vehicle occupants.

As paragraph S7.4.2 would be reworded in this proposal, manufacturers would be required to include instructions in their vehicle owner's manual concerning the proper use of any tension-relieving devices incorporated in their automatic belt systems. These instructions would have to state the maximum amount of slack that can safely be introduced and include a warning to vehicle occupants that if excessive slack is introduced into the system, the protection offered by the belt system would be substantially reduced or even eliminated. The agency solicits specific comments on the potential effect that tension-relievers may have on belt effectiveness and belt usage. The agency is particularly interested in obtaining data on the effects of belt slack vs. effectiveness.

Torso Belt Body Contact Force

NHTSA research indicates that a substantial number of occupants are likely to complain about pressure if the torso belt net contact force is greater than .7 pound (DOT HS-805 597). Therefore, the January 8, 1981, final rule specified that the torso portion of any belt system shall not create a contact pressure exceeding that of a belt with a total net contact force of .7 pound. Most of the petitions for reconsideration objected to this requirement. However, the objections were essentially identical to the arguments raised by the manufacturers when the requirement was first included in the notice of proposed rulemaking. No new reasons were given which would cause the agency to reverse its prior decision on this issue. As stated in the final rule, a detailed study by Man Factors, Inc. showed that belt contact force greater than 0.7 pound was unacceptable to more than 60 percent of the test subjects. Therefore, because excessive pressure is such a major complaint by motor vehicle occupants, the agency believes it is extremely important to limit belt contact force. The agency reiterates its statement of reasons made in the Januray 8, 1981, final rule.

The agency also does not accept one manufacturer's argument that the procedure specified for measuring belt contact force is not practicable or repeatable. The specified procedure is relatively simple and was based primarily on comments by manufacturers in response to the notice of proposed rulemaking (i.e., commenters recommended that a procedure be specified for measuring belt pressure, and included recommended specifications). The manufacturer did not provide concrete data demonstrating that the procedure or the requirement is not reasonable and practicable. The procedure remains as issued.

One manufacturer requested that the contact force requirement, S7.4.3, be amended to except any belt system incorporating a tension-relieving device. In support of this request, the petitioner noted that even .7 pounds of pressure is objectionable to some vehicle occupants and that a tension-relieving device can be used to eliminate pressure entirely, i.e., so that the webbing does not even touch the occupant where the force is measured.

While the agency believes these arguments may have merit, it is concerned that excepting belt systems incorporating tension-relieving devices may result in designs that have excessive contact force. This could cause an occupant to introduce slack in the belt who otherwise might not do if the system complied with the 0.7-pound contact force requirement, thus reducing potential effectiveness of the belt.

However, as noted earlier, the agency believes that it is not necessary to preclude tension-relieving devices altogether and has revised S7.4.2, *Test Procedures*, so that such devices shall not be precluded. However, the agency has also tentatively concluded that belt systems that incorporate webbing tension-relieving devices should not be excluded from the 0.7 pound contact force requirement. The tentatively proposed amendment also clarifies that tension-relieving devices include "comfort clips," "window-shade" devices or other mechanisms that can reduce belt control pressure entirely. Comments are solicited on the cost to comply with the 0.7-pound contact force requirement and the costs of various types of tension-relieving devices.

Subsequent to the final rule, American Motors stated that occupants of open-body vehicles (for examples, Jeeps) may prefer to have the secure feeling of the seat belt upper torso webbing tight against their chest, i.e., with a force greater than the 0.7 pound specified in the standard. The company asked that open-body vehicles be excluded from the belt contact force requirement. The agency believes that the 0.7-pound force

will keep the upper torso belt sufficiently tight against the chest to satisfy virtually all occupants who may perfer to "feel" the belt on the chest. Therefore, open-body vehicles have not been excluded from the 0.7 pound contact force requirement.

Latchplate Accessibility

As noted in the final rule, one of the most inconvenient aspects of using many current seat belt designs is the difficulty that the seated occupant has in reaching back to grasp the belt latchplate when the belt is unbuckled and in its retracted position. The greater the difficulty in reaching the latchplate to buckle the belt, the more likely the occupant will be discouraged from using the belt. Poor accessibility of latchplates results from two main factors: location of the lactchplate beyond the convenient reach of some seated vehicle, occupants, and inadequate clearance between the seats and side of the vehicle to allow, easy grasping of the latchplate.

Paragraph S7.4.4 of the January 8, 1981, final rule specified requirements to define limits on reach distance for latchplates and to prescribe minimum clearances for arm and hand access. The latter requirement was specified in terms of a test block which must be able to move to the latchplate unhindered.

Several petitioners stated that paragraph S7.4.2 should be clarified to indicate it is only applicable to seat belts at front outboard seating positions. This is what the agency intended and the agency is proposing clarifying language for S7.4.2.

Other manufacturers stated that the requirement for "unhindered transit" of the test block to determine latchplate access is design restrictive and unduly stringent, since it does not allow any depression of the seat cushion by the test block. These manufacturers argued that a vehicle occupant would not be bothered if the seat cushion had to be depressed to a limited degree to reach the latchplate. The manufacturers also argued that the requirement should be eliminated altogether since the standard already requires vehicles to have a latch mechanism "whose components are accessible to seated occupants in both the stowed and operational position."

For the same reasons as were stated in the January 8, 1981, final rule, the agency believes that it is necessary to specify performance requirements for the easy accessibility of latchplates. However, upon reconsideration of the manufacturers' comments, the agency has determined that allowing some limited amount of seat cushion depression to gain access to the latchplate would not destroy the effectiveness of this requirement. A manufacturer pointed out that one of its vehicles cannot pass the latchplate accessibility requirement specified in the standard because the test block depresses the seat cushion, yet the vehicle was shown to be acceptable in NHTSA's contract with Verve Corporation which evaluated the accessibility requirement with human test subjects (DOT HS-803-887).

After reconsidering all factors, the agency has determined that the simplest way to accommodate the manufacturers' legitimate concerns that the existing requirement is unduly stringent is to propose reducing the size of the test block. Reducing the size of the test block is simpler than developing an objective method for measuring and limiting seat cushion depression. The new dimensions for the test block proposed in this notice are representative of the human hand, while the originally adopted dimension was representative of both the hand and a small portion of the forearm. The new dimensions have been determined to be adequate based on the length and thickness dimension listed in SAE Recommended Practice J833A and J925. Therefore, the proposed dimension change should meet the manufacturers' concerns and still ensure easy accessibility.

Belt Retraction

Many persons find seat belts inconvenient because the belt webbing will not retract completely to its stowed postion when the system is unbuckled, thus creating an obstacle when the occupant is trying to exit the vehicle or soiling the belt if it is caught in the door. To alleviate such problems, paragraph S7.4.5 was included in the January 8, 1981, final rule to provide that the belt webbing of any seat belt assembly shall automatically retract completely to its stowed position when the latchplate is released from the buckle and the adjacent vehicle door is opened.

In its petition for reconsideration, one manufacturer stated that it markets certain light truck models which have "captain's chairs" that are equipped with movable armrests. The armrests on the outboard side of these seats must be raised and placed in a stowed position before the occupant can exit the vehicle. For this type vehicle seat, the manufacturer requested that the requirement for belt retraction be revised to indicate that the movable armrest may be adjusted to its stowed position prior to conducting the retraction test.

The agency believes that the petitioner's request is justified for vehicle seats in which the outboard armrest must *in fact* be moved before the occupant can exit the vehicle. However, if a movable armrest is installed only for added convenience, many persons may leave it down, i.e., not place it in its stowed position. In such cases, the belt must be able to retract completely to its stowed position. In such cases, the belt must be able to retract completely to its stowed position when it is unbuckled and the adjacent door is opened.

Although not included in its petition for reconsideration, American Motors has asked the agency by letter to exclude open-body vehicles without doors from the retraction requirements of paragraph S7.5. The company stated that the requirement for complete retraction of a safety belt when the buckle is released and the door is opened is inappropriate for vehicles without doors. The specification for complete retraction when the door is opened was included in the requirement because some belt window-shade devices can be released either manually by the occupant or automatically when the vehicle door is opened. The agency agrees that the requirement that a belt retract when a vehicle's door is opened is inapplicable to vehicles with no doors. The agency continues to believe that an open-body vehicle with a belt system with a tension-relief device should completely retract when an occupant manually deactivates the tension-relief device. Therefore, the agency proposes to modify paragraph S7.4.6 to provide that open-body vehicles with no doors that have a belt system with a tension-relief device shall fully retract when an occupant manually deactivates the tension-relief device.

Seat Belt Guides

Seat belt webbing and buckles in motor vehicles often fall or are pushed down behind the seat. Consequently, occupants are discouraged or actually precluded from using the belts. Paragraph S7.4.6.1 of the final rule specified that belt webbing that is designed to pass through the seat cushion or between the seat cushion and seat back shall pass through guide openings in the seat or through flexible conduits between the seat cushion and seat back to maintain the location of the seat belt latchplate and buckle on the seat cushion. In addition, S7.4.6.2 specified that the buckle and latchplate of a manual seat belt assembly shall not slip out of the guides or conduits and fall behind the seat cushion. There was an exception from these requirements for "rear seats that tumble."

Nearly all of the manufacturers which submitted petitions for reconsideration had objections concerning the specifications for seat belt guides. Several manufacturers argued that the specification for "guide openings" or "flexible conduits" might preclude other designs which would achieve the same purpose, such as the use of rigid cables. One manufacturer had several objections to the requirement as stated in S7.4.6.1 and S7.4.6.2. That company argued that the requirement in the former paragraph, by the phrase, "to maintain the location of the seat belt latchplate and buckle on the seat cushion," establishes a higher level of performance than is required in the latter paragraph. The company pointed out that the performance requirement in S7.4.6.2 only specifies that the seat belt latchplate shall not pass through the seat belt guides and fall behind the seats under stated conditions. The company stated that the level of performance inherent in the S7.4.6.1 phrase, when applied to nonretractable belts, is not attainable by seat belt guides.

The agency did intend for paragraph S7.4.6.1 to establish a separate requirement from the one in S7.4.6.2. The point is that in some cases buckles might not be able to pass back through guide openings to fall behind the seat, yet could nevertheless fall behind the seats due to the amount of belt webbing between the buckles and the guide openings. Paragraph S7.4.6.2 was intended to assure that belt hardware is not pulled back through guide openings or conduits when the seat is moved forward or folded. Paragraph S7.4.6.1 was intended to make certain that belt buckles and latchplates are always accessible to the vehicle occupant. As stated in the January 8, 1981, final rule: "The intent of the provision was only to require that the belt hardware pass through guides or conduits to maintain the location of the buckle and latchplate *on top of the seat cushion*" [emphasis added]. The agency believes it is extremely important that belt buckles and latchplates or some portion of the attached webbing should remain on the seat cushion at all times to assure that the user has ready access to the belts. However, the agency agrees with the manufacturers' concerns about design flexibility and does not mean to limit the design used to achieve this goal. The agency believes that manufacturers should be permitted to use stiffeners, guide openings, cables or conduits of any type to ensure that the belt hardware will remain on top of the seat cushion during normal use. However, the agency urges manufacturers not to employ designs that are so stiff that the belt system retractor will not pull the belt tight enough to properly fit small occupants or that are unduly difficult to cinch down in the case of manually adjustable belts. This notice proposes clarifying language to reflect the issues.

In response to a question by one manufacturer, the agency does not mean to imply by this requirement that it must be impossible for someone to be able intentionally to push the belt hardware behind the seat cushion to get rid of it. The requirement is only intended to address conditions of normal use, such as someone sitting on the seat cushion.

Two manufacturers requested that the agency clarify what is meant in S7.4.6.1 by the phrase "seats that tumble," and one of these requested that the exception be expanded to include other seats that articulate to serve a dual function. Specifically, one manufacturer has a van model which has a seat that converts into a bed by moving the seat cushion horizontally forward about nineteen inches. Thus, although the seat does not "tumble," The company argues that the requirement would necessitate placing the belt hardware on the seat frame, and that such seats should also be excluded from the requirement. The agency believes that in light of the various configurations and design limitations that might arise, seats that are movable to serve a secondary function should be excluded from the requirements of S7.4.6. The agency has also determined that the term "tumble" is causing unnecessary confusion. Therefore, this notice proposes to modify the provision to state that seats whose seat cushions are "movable" to serve a dual function are excepted from the requirements. The agency does urge manufacturers to make every attempt to meet the requirements for all seats, or provide instructions to explain how the seat belts are re-inserted between the seat cushion and seat back after the seat is returned to its riding position.

Finally, several manufacturers objected to the requirement in S7.4.6.2 that the inboard receptacle end of a seat belt assembly installed at a front outboard seating position shall be accessible with the center arm rest in any position to which it can be adjusted (without having to move the armrest). One petitioner argued that the armrest is also an occupant convenience item, and that it is reasonable to assume that a front seat occupant would not be inconvenienced by moving the armrest in order to buckle the seat belt. Another manufacturer argued that the requirement is not objective because no test procedure is specified to determine "accessibility."

The agency disagrees with these arguments. Having to move the armrest each time the belt is used in order to gain access to the belt hardware to buckle the belt is an inconvenience and a discouragement to seat belt use, and in some cases may be a hindrance to disconnection in emergency situations. Also, requiring that a belt buckle be readily accessible should ensure that the buckle is visible as well. A restraint with a visible buckle is more likely to be used than one which is hidden from the occupant's view. Finally, the agency does not agree with the petitioner's comment that a detailed test procedure is needed for this requirement. Simple inspection should be sufficient to determine whether it would be possible for a person to buckle his or her belt without first moving the arm rest. Accordingly, the agency does not believe manufacturers will have any real problems complying with this requirement.

Warning System Requirements

The January 8, 1981, final rule included a new specification for warning systems for automatic belts [S4.5.3.3(b)(C)] to ensure that motorized automatic belts are locked into place before the vehicle begins moving. If for some reason the motorized belt has not returned and locked into its protective mode, the occupant would be alerted by a continuous light and by a 4- to 8-second audible warning, under the requirements included in the final rule.

In its petition, a manufacturer stated that it has investigated several motorized automatic belt systems since the January 8, 1981, final rule was issued and has determined that the audible warning requirement could be a problem in certain cases. As written in the final rule, S4.5.3.3(b) required a 4- to 8-second audible warning beginning whenever the vehicle's ignition switch is moved to the "on" or "start" position and the webbing of a motorized system is not in its locked, protective mode at the anchorage point. Further, the requirement specified that there shall be a warning light *for as long as* the ignition switch is in the "on" or "start" position and the webbing of a motorized system is not in its locked, protective mode at the anchorage point.

The manufacturer pointed out that in some motorized belt designs it is considering there are several instances in which the audible signal might not activate when it is needed, and several instances in which it might activate before it is really needed.

If the ignition is turned to the "on" or "start" position while the belt webbing is still moving, the audible signal will activate even though the belt will eventually (in a matter of seconds) be locked into its protective mode. The petitioner is concerned that this will be annoying to motorists since the buzzer will sound every time the ignition is turned on. As the manufacturer pointed out, the vehicle occupants never hear the buzzer in other automatic belt systems provided the belt remains fastened.

The agency agrees with the manufacturer that this is a legitimate concern. The agency has stated in the past that occupants should not be subjected to audible warnings unless a belt system is in fact not in its protective mode. Also, if the audible warning activates every time the ignition is turned to the "on" position, it will become so routine that it will have no effect when it is in fact needed to warn that a belt is not operable.

Further, the agency is re-considering the requirement that would require a continuous or flashing warning light for as long as condition A (The vehicle's ignition switch is moved to the "on" position or to the "start" position) exists with condition B (The driver's automatic belt is not in use, as determined by the belt latch mechanism not being fastened or, if the automatic belt is non-separable, by the emergency release mechanism being in the released position). The agency believes that a 60 second light would be sufficient to remind the driver that the belts were unfastened and that continuous light could become an unnecessary irritant and would become so routine that it would have no effect in reminding the driver to buckle-up. The agency is proposing to change that requirement to provide for a warning light that activates for *at least* 60 seconds if condition (A) exists simultaneously with condition (B). Such a requirement would allow the manufacturer the option of providing for additional warning time. The agency would like comments if the requirement should be specific as to the length of time the warning light should exist in regards to conditions (A) and (B).

In regard to condition C (The belt webbing of a motorized automatic belt system is not in the locked protected mode at its anchorage point), the agency believes that the warning light should remain on as long as condition (A) exists simultaneously with condition (C). Since there would be no visible means other than the warning light available to the driver to determine whether or not the motorized belt was or was not in a protective mode, the driver could be misinformed as to the readiness of the automatic belt system if the warning light automatically turned off at a pre-set time without regard to the readiness of the system.

After considering these problems, the agency believes that the best solution to competing concerns is to require only a visible warning signal (i.e., tell-tale light) for motorized automatic belt systems that have not locked properly at the anchorage point. The warning light would not be obnoxious to vehicle occupants and, since it is not limited to a duration of 4- to 8-seconds, it would continue to operate as long as the automatic belt has not been locked into its protective mode. The agency believes that this will be a sufficient warning to vehicle occupants that their motorized system has not been properly locked at the anchorage point. Under the proposed requirements an audible signal will be required, however, if the motorized system has a separate emergency release mechanism, e.g., a buckle release, and the belt is not fastened (condition "B" in the standard).

Test Procedures

One manufacturer stated that the test procedure specified in S10.5 for establishing the reach envelopes described in S7.4.4 (not S7.4.7 as is incorrectly stated in the January 8, 1981, final rule) relating to latchplate access, is not repeatable and not stated in objective terms. The company contends that positioning the test dummy in a vehicle is impossible to accomplish without variations and that this positioning will cause a variation in test results when determining the reach envelopes.

The agency does not accept those arguments. While there may be some minor variations in dummy positions from one test to another, the agency believes that the latitude available to the manufacturer for locating latchplates and retractors is more than sufficient to allow the manufacturer to overcome the small standard deviations in locating the test dummy device. The agency believes the reach envelopes that are specified and the test procedure are amply supported and validated by data obtained from contracts with Verve Corporation (DTNH-22-C-07011 and DTNH-22-80-C-07611), Man Factors Incorporated (DOT-HS-7-01617) and Dynamic Science Corporation (DTNH 11-22-80-C-02063). Therefore, the test procedure of S10.5 remains unchanged.

The notice of proposed rulemaking preceding the January 8, 1981, final rule did not specify a test procedure for measuring the belt contact force limitations specified in S7.4.3. In response to comments to the proposal, a procedure was specified in the final rule, S10.6. Several petitioners requested that minor changes and clarifications be made in these procedures. One petitioner stated that the clothing on the dummy test device used in the procedure can produce drag resulting in unwanted deviations in the force measurements. In order to avoid this minor problem, the agency is proposing to modify the procedure to specify that the test dummy is to be unclothed.

Another manufacturer requested that the procedure be revised to conform with the procedure noted in the Man Factors Report (DOT-HS-7-01617). The procedure specified in S10.6 is very similar to the Man Factors study, with modification based on industry suggestions (in comments to the proposal). The S10.6 procedure includes minor modifications to ensure that the belt drag on the belt guide components is eliminated prior to the force measurement. The agency believes that these modifications should remain in the standard to provide more accurate measurements.

Walk-in Van Vehicles

One manufacturer stated that twenty-five percent of the walk-in van vehicles it will produce in the 1983-model year and thereafter will have a GVWR less than 10,000 pounds. These vehicles would, therefore, be subject to the comfort and convenience requirements of Standard No. 208. The company stated that certification of walk-in vans to these requirements would necessitate significant restraint design changes which would not be justified in terms of their unique design and distinct usage characteristics. Therefore, the company's petition requested that walk-in vans be excepted from the comfort and convenience requirements.

The manufacturer claims that changes to walk-in vans necessary to meet the requirements of S7.4.4 (latchplate access) and S7.4.5 (belt retraction) could be restrictive to intended vehicle use. The company stated, "the addition of retractors and belt stiffeners to the seat, if necessary to meet the S7.4.4 reach requirements, could interfere with driver access to cargo in delivery applications." The manufacturer stated that the changes required to meet S7.4.4 and S7.4.5 would include: the addition of emergency locking retractors; relocation of anchorages to the seat pedestal; and seat structural modification. The company claims that the consumer cost for these changes would be

approximately $115 for a vehicle equipped only with a driver seat.

After carefully evaluating those comments, the agency has tentatively determined that walk-in step vans should be excluded from seat belt comfort and convenience requirements. By the term "walk-in vans" the agency is referring to city delivery type vehicles used, for example, to deliver parcels or dry cleaning. The agency has evaluated the cost of requiring these vehicles to comply with the requirements and believes that with many walk-in van designs the addition of emergency locking retractors and relocation of belt anchorages to the seat would be extremely expensive. This is true because most walk-in vans have pedestal seats and the anchorages and restractors would have to be designed to accommodate the great distance from the vehicle floor to the seat cushion. This means it would be much more expensive for these vehicles to comply with the requirements than other vehicles. Moreover, the agency believes that in some designs, the belt hardware and webbing that would be required to comply with the requirements could thwart access to the rear cargo area of the vehicle. Because of the fact that the driver in these vehicles is constantly in and out of the seat, belt use is at a minimum. The agency does not believe that added comfort and convenience will significantly increase belt use in these vehicles because of their particular commerical use. This, coupled with the greater cost of these vehicles to comply, leads the agency to propose excluding walk-in vans from the seat belt comfort and convenience requirements. However, these vehicles are still required to have safety belts at each designated seating position as specified by section S4.2.1.2(a) of FMVSS 208 and which conform to the requirements of Standards 209 and 210.

One petitioner noted that the preamble to the final rule indicated that the weights and dimensions of the vehicle occupants referred to in Standard No. 208 and specified in S7.1.3 were to be revised and included in the amendment. The chart, however, was not included in the final rule. Therefore, the chart is being included in this notice. The agency emphasizes again that this chart is not intended to make any changes in the 49 CFR Part 572 test dummy.

The agency indicated in the January 8, 1981, final rule that it intended to issue performance guidelines concerning other area of seat belt comfort and covenience not included in the amendment to Standard No. 208. After reconsideration, however, the agency has decided that it will not issue such performance guidelines at this time.

In the notice of proposed rulemaking published December 31, 1979, (44 FR 77210), the agency proposed a minimum 2-inch clearance between the webbing of an automatic belt and the outboard seat cushion when the vehicle door is completely opened to facilitate a perception of the proper method for entering the vehicle, i.e., sliding behind and underneath the belts. In their response to this proposal, most manufacturers opposed the minimum specification for webbing/seat clearance. The comments stated that there is no safety rationale for the requirement because any misconception concerning the proper way to enter the vehicle would be removed after the occupant became familiar with the vehicle. Peugeot stated that experience has shown that the occupant can easily push the strap aside for a moment in order to enter the vehicle. The company argued that the proposed requirement is tantamount to requiring the installation of an automatic mechanism to move the belt system's top anchor position. (Note: In response to this specific comment, the agency, in 1974, issued an interpretation that it would not consider a belt system that had to be manually moved out of the way by the occupant to be an "automatic" system that would satisfy the requirements of the standard; see 39 FR 14594, April 25, 1974. The agency now believes that such an interpretation may be overly stringent and seeks public comment on this issue.) Several manufacturers stated the minimum specification could degrade belt effectiveness in a crash. These manufacturers argued that the specification would preclude a belt, particularly a lap belt, from fitting securely around the occupant. This could result in the occupant "submarining" under the belt during a crash. In its January 1981 final rule, the agency declined to promulgate any seat to webbing clearance requirement. Nevertheless, the agency encourages manufacturers to provide as much vertical clearance between the seat cushion and webbing as is practical.

Currently, manual Type 2 seat belts installed in the front seats of passenger cars are exempted from the comfort and convenience requirements. This was done to allow manufacturers to devote their resources to automatic restraints in these vehicles since Type 2 manual belts in the front seats would be phased out when the automatic restraint requirements became effective. However, the final rule mandating automatic restraints (49 FR 28962) specifies that if States representing two-thirds or more of the nation's population enact mandatory seat belt usage laws before April 1, 1989, the requirement for automatic protection will no longer apply. In the event that this occurs, the agency is hereby proposing to extend the applicability of the comfort and convenience requirements to Type 2 manual belts installed in the front seats of passenger cars effective September 1, 1989.

In the interim, the agency urges manufacturers to voluntarily incorporate as many of the requirements as possible in their passenger cars equipped with Type 2 manual belts in the front seats. Millions of these vehicles will be equipped with manual belts between now and September 1, 1989. It is extremely important that the belt systems on these vehicles be comfortable and convenient to use so that the current low rate of belt use can be increased. The requirements can be included easily and inexpensively during the normal model-year design changes and the agency urges all manufacturers to do so.

Regulatory Impact

NHTSA has considered the economic and other impacts of this proposal and determined that the rule is not a major rule within the meaning of Executive Order No. 12291. The agency has further determined that the proposal is not significant within the meaning of the Department of Transportation's regulatory policies and procedures. In issuing the final rule on January 8, 1981, NHTSA released a final regulatory evaluation which contains the agency's assessment of the societal benefits and economic consequences of that rule. Copies of the evaluation can be obtained by writing to NHTSA's Docket Section at the address given at the beginning of this notice.

A supplement to that evaluation has been prepared and placed in the public docket. The change proposed in this notice are not anticipated to significantly increase costs for manufacturers or to consumers. Rather, most of the changes proposed in this notice will reduce costs somewhat for manufacturers. This is particularly true since the effective date of the comfort and convenience requirements has been delayed for one year to September 1, 1986. With this additional lead time, most manufacturers will be able to make necessary changes in their seat belt installation during normal model-year design changes. This should reduce any costs associated with the requirements.

The agency has also analyzed this proposal for purposes of the National Environmental Policy Act and has determined that it will not have a significant effect on the human environment.

Furthermore, the agency has reviewed the effects of this proposed rule on small entities under the Regulatory Flexibility Act. Based on this evaluation, I certify that the proposed rule will not have a significant economic impact on a substantial number of small entities. Due to the minimal effect on testing costs, the final rule will not significantly affect the manufacturing costs of any seat belt manufacturers who are small entities or the retail price of vehicles purchased by any small organizations or governmental units. In accordance with this evaluation, no regulatory flexibility analysis has been prepared.

List of Subjects in 49 CFR Part 571

Imports, Motor vehicle safety, Motor vehicles, Reporting and recordkeeping requirements, Rubber and rubber products, Tires.

PART 571—[AMENDED]

§ 571.208 [Amended]

In consideration of the foregoing, 49 CFR 571.208, would be amended as follows:

1. S7.1.1.3 would be revised to read:

S7.1.1.3(a) Except as provided in S7.1.1.3(b), a Type 1 lap belt or the lap belt portion of any Type 2 belt installed at any front outboard designated seating position for compliance with this standard in a vehicle, other then walk-in van-type vehicles, manufactured on or after September 1, 1986, shall meet the requirements of S7.1 by means of an emergency-locking retractor that conforms to Standard No. 209 (§ 571.209).

(b) The requirements of S7.1.1.3(a) do not apply to the lap belt portion of any Type 2 belt installed in a passenger car or to walk-in van-type vehicles.

2. A new paragraph S7.1.1.5 would be added to read:

S7.1.1.5 A manual Type 1 or the lap belt portion of a manual Type 2 seat belt that is adjusted for length by an emergency locking retractor, installed for compliance with this standard in any designated seating position other than the driver position, in any vehicle with a GVWR of 10,000 lbs. or less, manufactured after September 1, 1986, shall be provided with a locking means to permit the secure restraint of child restraint devices. Belts installed in walk-in van-type vehicles need not comply with this requirement.

3. S7.4 would be revised to read:

S7.4 *Seat belt comfort and convenience.* (a) Automatic seat belts installed in any vehicle, other than walk-in van-type vehicles, with a GVWR of 10,000 pounds or less manufactured on or after September 1, 1986, shall meet the requirements of S7.4.1, S7.4.2, and S7.4.3.

(b) Except as provided in S7.4(c), manual seat belts, except for passenger cars, installed for compliance with this standard in any vehicle with a GVWR of 10,000 pounds or less manufactured on or after September 1, 1986, shall meet the requirements of S7.4.3, S7.4.4, S7.4.5, and S7.4.6. Manual seat belts in passenger cars manufactured on or after September 1, 1989, shall meet the requirements of S7.4.3, S7.4.4, S7.4.5, and S7.4.6.

(c) The requirements of S7.4(b) do not apply to manual belts installed in walk-in van-type vehicles.

4. S7.4.1 would be revised to read:

S7.4.1 *Convenience hooks.* Any manual convenience hook or other device that is provided to stow seat belt webbing to facilitate entering and exiting the vehicle shall automatically release the webbing when the automatic belt system is otherwise operational and shall remain in the released mode for as long as (a) exists simultaneously with (b), or at the manufacturer's option for as long as (a) exists simultaneously with (c)—

(a) The vehicle ignition switch is moved to the "on" or "start" position;

(b) The vehicle's drive train is engaged;

(c) The vehicle's parking brake is in the released mode (nonengaged).

5. S7.4.2 would be revised to read:

S7.4.2 *Webbing tension-relieving device.* Any automatic seat belt assembly that includes either manual or automatic devices that permit the introduction of slack in the webbing of the upper torso restraint (e.g., "comfort clips" or "window-shade" devices) shall comply with the injury criteria of S5 of this standard with the belt webbing adjusted to introduce the maximum amount of slack that is recommended by the vehicle manufacturer in the owner's manual to be introduced into the shoulder belt under normal use conditions. The vehicle owner's manual shall explain how the device works and shall specify the maximum amount of slack (in inches) which is recommended to be introduced under normal use into the belt by means of the tension-relieving device. The instructions shall also warn that introducing slack beyond the specified amount could significantly reduce the effectiveness of the belt in a crash. Any belt slack that can be introduced into the belt system by means of any tension-relieving device or design shall be cancelled each time the belt is unbuckled and the adjacent vehicle door is opened except for open-body vehicles with no doors.

6. S7.4.3 would be revised to read as follows:

S7.4.3 *Belt contact force.* When tested in accordance with S10.8, the upper torso webbing of any seat belt assembly shall not exert more than 0.7 pounds of contact force when measured normal to and one inch from the chest of an anthropomorphic test dummy, positioned in accordance with S10 in the seating position for which that assembly is provided, at the point where the centerline of the torso belt crosses the midsagittal line on the dummy's chest. Automatic seat belt assemblies with tension-relieving devices shall be tested with the tension-relieving device deactivated.

7. The first sentence of S7.4.4 would be revised to read as follows:

S7.4.4 *Latchplate Access.* The latchplate of any seat belt assembly installed in front outboard seating positions in accordance with S4.1.2 shall be located within the outboard reach envelope of either the outboard arm or the inboard arm described in S10.7 and Figure 3 of this standard.* * *

8. S7.4.5 would be revised to read as follows:

S7.4.5 *Retraction.* When tested under the conditions of S8.1.2 and S8.1.3, with anthropomorphic test dummies whose arms have been removed positioned in the front outboard designated seating position in accordance with S10 and restrained by the belt systems for those positions, the torso and lap belt webbing of any of those seat belt systems shall automatically retract to their completely stowed position when the latchplate is released from the buckle and the adjacent vehicle door is in the open position. Open bodied vehicles with no doors that have a belt system with a tension-relieving device shall fully retract when the tension-relieving device is manually deactivated. For the purpose of the retraction requirement, outboard armrests may be placed in their stowed positions if they are on vehicle seats that must have the armrests in the stowed position to allow an occupant to exit the vehicle.

9. S7.4.6.1 would be revised to read as follows:

S7.4.6.1(a) Any manual seat belt assembly whose webbing is designed to pass through the seat cushion or between the seat cushion and seat back shall be designed to maintain the location of the seat belt latchplate and

buckle, or a portion of the seat belt webbing, on top of the seat cushion under normal conditions (i.e., conditions other than when belt hardware is intentionally pushed behind the seat by a vehicle occupant).

(b) The requirements of S7.4.6.1(a) do not apply to seats whose seat cushions are movable so that they serve a function other than seating.

10. S4.5.3.3(b) would be revised to read as follows:

S4.5.3.3(b) In place of a warning system that conforms to S7.3 of this standard, be equipped with the following warning system: At the left front designated seating position (driver's position), be equipped with a warning system that activates a continuous or intermittent audible signal for a period of not less than 4 seconds and not more than 8 seconds and that activates a continuous or flashing warning light for not less than 60 seconds, visible to the driver (beginning when the vehicle ignition switch is moved to the "on" or the "start" position) when condition (A) exists simultaneously with condition (B), and that activates a continuous or flashing warning light, visible to the driver, displaying the identifying symbol for the seat belt telltale shown in Table 2 of Standard No. 101 (49 CFR 571.101) for as long as condition (A) exists simultaneously with condition (C).

(A) The vehicle's ignition switch is moved to the "on" position or to the "start" position.

(B) The driver's automatic belt is not in use, as determined by the belt latch mechanism not being fastened or, if the automatic belt is nonseparable, by the emergency release mechanism being in the released position.

(C) The belt webbing of a motorized automatic belt system is not in its locked, protective mode at the anchorage point.

11. S10.5 would be amended to reference S7.4.4 rather than S7.4.7.

12. S10.6 would be revised to read as follows:

S10.6 To determine compliance with S7.4.3 of this standard, position the anthropomorphic test dummy, which is unclothed, in the vehicle in accordance with S8.1.11 and under the conditions of S8.1.2 and S8.1.3. Close the vehicle's adjacent door, pull 12 inches of belt webbing from the retractor and then release it, allowing the belt webbing to return to the dummy's chest. Pull the belt webbing three inches from the dummy's chest and release until the webbing is within one inch of the dummy's chest and measure belt pressure.

13. Figure 4 of this standard would be revised as follows:

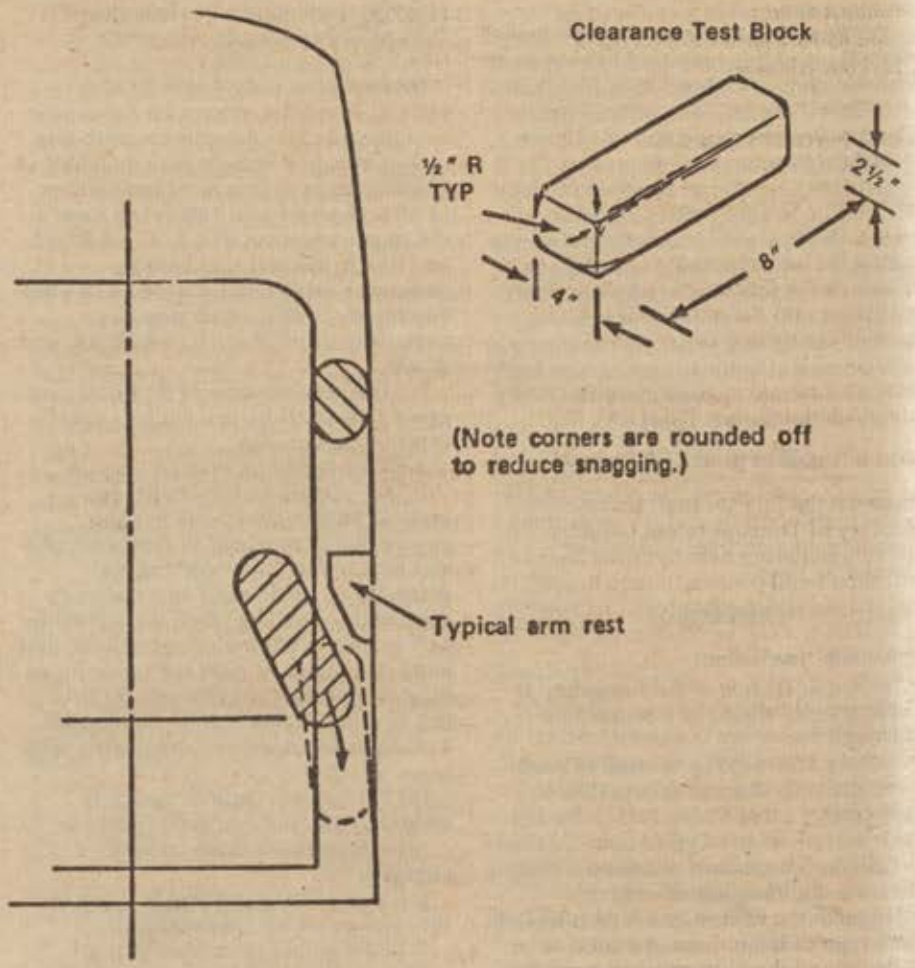

Figure 4—USE OF CLEARANCE TEST BLOCK TO DETERMINE HAND/ARM ACCESS

14. The weights and dimensions of the vehicle occupants referred to in this standard and specified in S7.1.3 would be revised to read as follows:

	50th percentile 6-year-old child	5th percentile adult female	50th percentile adult male	95th percentile adult male
Weight (pounds)	47.3	102	164±3	215.
Erect sitting height (inches)	25.4	30.9	35.7±.10	38.
Hip breadth (sitting) (inches)	8.4	12.8	14.7±.7	16.5.
Hip circumference (sitting) (inches)	23.9	36.4	42.0	47.2
Waist circumference (sitting) (inches)	20.8	23.6	32.0+.60	42.5
Chest depth (inches)		7.5	9.3±.20	10.5.
Chest circumference:				
Nipple (inches)		30.5		
Upper (inches)		29.8	37.4±.6	44.5
Lower (inches		26.6		

(Secs. 103, 119, Pub. L. 89-563, 80 Stat. 718 (15 U.S.C. 1392, 1407); delegations of authority at 49 CFR 1.50 and 501.8)

Issued: April 8, 1985.

Barry Felrice,

Associate Administrator for Rulemaking.

[FR Doc. 85-8672 Filed 4-8-85; 3:14pm]

BILLING CODE 4910-59-M

---

49 CFR Parts 571 and 585

[Docket No. 74-14; Notice 38]

Federal Motor Vehicle Safety Standards for Occupant Crash Protection and Automatic Restraint Phase-In Reporting Requirements

AGENCY: National Highway Traffic Safety Administration (NHTSA), DOT.

ACTION: Notice of proposed rulemaking.

SUMMARY: On July 17, 1984, the Secretary of Transportation issued a final rule requiring automatic occupant protection in all passenger cars based on a phased-in schedule beginning on September 1, 1986, with full implementation being required by September 1, 1989, unless, before April 1, 1989, two-thirds of the population of the United States are covered by state mandatory safety belt use laws (MULs) meeting specified criteria. In that notice, the Secretary identified several issues that would likely need additional rulemaking. This notice sets forth proposals on the following issues identified in the Secretary's final rule: elimination of the oblique crash tests, application of the automatic restraint requirements to convertibles, application of the Head Injury Criteria to non-contact HIC measurements, adoption of some of the New Car Assessment Program test procedures, and express mention in Standard No. 208 of the due care defense.

In addition, this notice also addresses dynamic testing of manual belts and reporting requirements regarding compliance with the phase-in requirements.

DATE: Comments must be received by May 28, 1985. If adopted, the proposed amendments would become effective 45 days after publication of the final rule in the **Federal Register.**

ADDRESS: Comment should refer to the docket and notice number of this notice and be submitted to: Docket Section, Room 5109, National Highway Traffic Safety Administration, 400 Seventh Street, NW., Washington, D.C. 20590. (Docket Room hours 8 a.m.-4 p.m.)

FOR FURTHER INFORMATION CONTACT: Mr. Barry Felrice, Office of Vehicle Safety Standards, Room 5320, National Highway Traffic Safety Administration, 400 Seventh Street, SW., Washington, D.C. 20590. Telephone (202) 426-1810.

SUPPLEMENTARY INFORMATION:

Background

On July 17, 1984 (49 FR 28962), the Secretary of Transportation issued a final rule requiring automatic occupant protection in all passenger cars based on a phased-in schedule beginning on September 1, 1986, with full implementation being required by September 1, 1989, unless, before April 1, 1989, two-thirds of the population of the United States are covered by state mandatory safety belt use laws (MULs) meeting specified criteria.

More specifically, the rule requires:

- Front outboard seating positions in passenger cars manufactured on or after September 1, 1986, for sale in the United States, will have to be equipped with automatic restraints based on the following schedule:
- Ten percent of all cars manufactured on or after September 1, 1986.
- Twenty-five percent of all cars manufactured on or after September 1, 1987.
- Forty percent of all cars manufactured on or after September 1, 1988.
- One hundred percent of all cars manufactured on or after September 1, 1989.
- During the phase-in period, each car that is manufactured with a system that provides automatic protection to the driver without automatic belts will be given an extra credit equal to one-half car toward meeting the percentage requirement.
- The requirement for automatic restraints will be rescinded if MULs meeting specified conditions are passed by a sufficient number of states before April 1, 1989, to cover two-thirds of the population of the United States effective not later than September 1, 1989.

In that notice, the Secretary identified various issues on which additional rulemaking was likely. Those issues were the elimination of the oblique crash tests, application of the automatic restraint requirements to convertibles, application of the Head Injury Criteria (HIC) to non-contact HIC measurements, adoption of some of the New Car Assessment Program (NCAP) test procedures, adoption of the Hybrid III test dummy, and express mention in FMVSS 208 of the due care defense.

This notice sets forth specific proposals on all of these issues, except on the Hybrid III test dummy, which is the subject of a separate notice in today's **Federal Register.** In addition, this notice also addresses dynamic testing of manual belts and reporting requirements regarding compliance with the phase-in requirements.

A number of other related Standard No. 208 issues are addressed in separate notices issued in today's **Federal Register.** Those issues are raising the HIC from 1,000 to 1,500 and the comfort and convenience of safety belts.

Convertibles

This notice proposes alternative occupant crash protection requirements for convertibles beginning with the model year 1990. The agency proposes that manufacturers have the option of installing manual lap belts subject only to the belt strength requirements of Standard No. 209 and the anchorage strength requirements of Standard No. 210 instead of automatic restraints subject to the injury criteria of Standard No. 208.

Background

Ford Motor Company requested that convertibles be exempted from the automatic restraint requirements in their comments on the notice of proposed rulemaking (48 FR 48622). Ford argued that the installation and operation of automatic lap and shoulder belts are not feasible in convertibles and, therefore, that the only means of compliance would be with air bags. As a result, the requirement, in effect, would be a design standard for convertibles, according to Ford. Ford argued further that an exemption was appropriate since the Vehicle Safety Act requires that safety standards be "appropriate for the class of vehicle to which they apply," and since convertibles are already exempt from the requirement in Standard 208 that all front outboard seating positions have lap and shoulder belts.

The July 1984 final rule responded to this request by stating disagreement with Ford on the issue of the feasibility of providing automatic belts in convertibles, but recognizing the possibility that providing those belts might not be appropriate or acceptable.

Accident Statistics for Convertibles

From 1975 through 1982, fatalities involving convertible occupants showed a consistent decline due to the "phasing out" of the passenger convertible. The number of convertible occupant fatalities dropped from 840 in 1975 to 240 in 1982 while the number of convertibles involved in fatal accidents also decreased from 1,025 in 1975 to 302 in

1982. During this period, convertibles constituted less than one percent of the total vehicle population. However, beginning in 1982, domestic automobile manufacturers increased production of convertibles. In 1982, four convertible models were available and in 1983, eight convertible models were available. By mid-1983, the automobile industry estimated that convertibles comprised two percent of new car sales in the United States. Thus, convertible sales are increasing.

Automatic Restraint Systems for Convertibles

The agency has considered the available options for providing automatic occupant crash protection to improve the safety of convertibles. The agency believes that although it is technologically feasible to install air bags in convertibles because there are no significant differences between their installation in convertibles and other passengers cars, installation of air bags in convertibles might not be reasonable due to the high estimated cost of installing air bags in those vehicles, which are produced in relatively small volumes. In their comments on the notice of proposed rulemaking, most manufacturers indicated that they were likely to comply with an automatic protection requirement for passenger cars by installing automatic safety belts, not air bags. While some companies are expected to provide driver-side air bags, the production volume of air bags is not likely to be high enough, i.e., over 300,000 units, to bring the production costs down to the level of $320 for a full front seat system as estimated by NHTSA. Consequently, air bag installation cost for convertibles could range from $600 to $1,500 per vehicle for a volume of 100,000 units or less, drastically affecting the cost, and possibly sales, of that type of vehicle.

As to automatic belts, NHTSA believes that an automatic belt which includes a torso restraint might be precluded by present convertible body designs. On other passerger cars, the B-pillar or door frame can provide the anchorage point for torso restraint, whether manual or automatic. On convertibles, the addition of a structural redesign providing a third anchorage point would be necessary. This anchorage could be a "pylon" type structural extension of the B-pillar or door fame. That extension might change the design image and aesthetics of the convertible. More important, because of the substantial strength it would have to have in order to withstand belt loads, this structural extension could present an additional impact hazard in some crash modes to front or rear seat occupants. The use of "Targa" roof designs and rollbars in some models might serve to facilitate the attachment of belt systems. The agency requests commenters to address the possible use of these designs with automatic belt systems.

Convertible design does not preclude passive interiors as a method of providing automatic occupant protection. However, only one manufacturer, General Motors, is known to be pursuing this approach for passenger cars and it has not yet shown the ability to meet consistently the injury criteria at 30 mph. Therefore, the early availability of this approach across the fleet of convertibles appears unlikely at this time.

Based on the considerations discussed in this notice, the agency is proposing that manufacturers have the option of installing manual lap belts instead of automatic restraints as required under the July 1984 final rule. The manual belts would be subject to the belt strength requirements of Standard No. 209 and the anchorage requirements of Standard 210, but not to the injury criteria and dynamic crash test procedures of Standard 208, including those proposed for manual belts elsewhere in this notice.

Convertibles equipped with manual lap belts would be included in the base production total of vehicles manufactured during the phase-in period of automatic restraints for other passenger cars under Standard No. 208.

The agency requests comments on the manual belt alternative as well as on the alternative of adopting no amendment regarding convertibles. In addition, NHTSA has several specific questions regarding convertibles to assist it in its decisionmaking:

1. How many convertibles are currently being produced? How many will be produced annually over the next 5 years?

2. What is the average sales price for a convertible?

3. How much would air bag systems raise the price of a convertible?

4. Is it feasible to install automatic lap belts in convertibles and, if so, how much would automatic lap belt systems, including necessary vehicle modifications, raise the price of a convertible? If automatic lap belts are feasible, should the agency allow their use in convertibles as an alternative type of automatic restraints?

5. What percent of new convertibles sales are equipped with lap and shoulder belts as opposed to only lap belts? What is the equivalent percent for the entire "on the road" convertible fleet?

6. What effect would higher prices caused by air bags have on convertible sales?

7. If no special provision is made for covertibles, how would manufacturers comply with the standard? Specifically: What percentage of convertible production would use air bags? What percentage would use passive interiors? What percentage would be modified to accept automatic belts? How much would these systems cost manufacturers and consumers?

Alternative Calculations of HIC

In April 1983, the Committee on Common Market Automobile Constructors (CCMC) petitioned the agency to change the calculation of the Head Injury Criterion (HIC). CCMC asked that the HIC only be calculated when there is a contact between the test dummy's head and a portion of the vehicle during a Standard No. 208 crash test. (CCMC also petitioned the agency to raise the HIC limit from 1,000 to 1,500. As explained in a separate notice appearing elsewhere in today's **Federal Register**, the agency has denied that portion of the CCMC petition.) Similarly, in response to the October 1983 NPRM on Standard No. 208, GM, Ford, MVMA, and AMC requested the agency to eliminate the HIC for noncontact events. Further comments urging the agency to eliminate the HIC measurement in the absence of head contacts were received from those same companies and from Renault and Peugeot in response to the Secretary's May 1984 SNPRM.

History of HIC

NHTSA first adopted the use of a HIC in Standard No. 208 in March 1972 (37 FR 5507). The HIC was to be calculated over the entire crash duration and cover both contact and noncontact events. Several manufacturers petitioned for the elimination of the HIC arguing that, in many vehicles, the available belt systems either could not meet or were only marginally meeting the criteria. They also argued that much of the head acceleration is attributable to the motion of the head as it moves forward without striking anything in the vehicle. Actual field collision data, they argued, did not indicate that this type of head movement by shoulder belted vehicle occupants in a crash is a serious injury producing factor.

The agency recognized the uncertainty of the significance of HIC in the absence of a head strike and concluded that the "present evidence [is] too scanty to be conclusive in either

direction." (37 FR 12393, June 23, 1972) As a result, and because of leadtime needed to achieve compliance, the agency temporarily amended the standard, until August 15, 1975, to modify the HIC calculation method. The amendment provided that measurement of head acceleration begins for belted dummies only at the moment at which the head strikes some portion of the vehicle other than the belt. Beginning on August 15, 1975, however, the HIC calculation was made during both contact and non-contact situations.

As discussed in the Secretary's Supplemental Notice of Proposed Rulemaking on Standard No. 208 in May 1984 (49 FR 20460), recent data continue to cloud the issue of the significance of non-contact HIC's. Commenters are referred to that notice for a more detailed description of the recent data.

Basis for HIC

The HIC was an outgrowth of the Gadd Severity Index, which in turn was developed on the basis of the Wayne State Tolerance Curve (WSTC). The WSTC was derived from a variety of experiments in which head-related injuries were produced by contact and noncontact sources. For example, data on contact injury results from heads directly impacting rigid surfaces were used to derive that part of the curve dealing with the relationship between short duration, high magnitude accelerations and potential injuries. Tolerance to non-contact injuries were the result of high speed sled tests of volunteers and also of animals who were restrained with lap and shoulder belts; the data from these tests defined that part of the curve dealing with long duration, low magnitude accelerations. Contact based injuries, however, were predominant in the composition of the curve. That is, most of the data points defining the curve were based on short duration head contacts. Although, this does not mean that the curve cannot be used over its entire range for forecasting the threshold of injury, the level of confidence is much higher for those regions in which data points provide a very clear definition of the curve, as is the case for direct contacts in which the impact time durations range up to 15ms. The level of confidence is lower for those portions of the curve which are made up of only a few points, portions which are analogous to non-contact events.

The agency considers the HIC to be the best currently available head injury indicator. There are substantial research data demonstrating that, for head contact cases, a HIC limit of 1000 is an effective method to minimize injury. There are a number of other candidate indicators, but none are developed far enough to be used with any degree of confidence. The HIC as an injury indicator for noncontact cases is weaker, although as discussed below, there are experimental data supporting the view that injuries may result in some non-contact situations.

A study of head injuries of lap-shoulder belt restrained cadavers, conducted by German researchers, showed that in tests up to 30 mph, there is approximately a 3 percent probability of brain injury due to ruptured blood vessels in non-contact situations. (See Docket 74–14, General Reference, Entry 532.) Since it is not currently possible to identify neurological damage in cadavers, it is not known whether any of the cadavers received brain injuries other than the ruptured blood vessels. Existing accident data on belt restrained occupants shows practically no brain injuries in non-contact situations, supporting the conclusion reached by the German researchers that the probability of vascular injuries to the brain occuring in non-contact crashes is low.

Other studies suggest that when the rapid whipping-like movement (angular acceleration) of the head in a crash exceeds certain limits, regardless of whether the head is directly impacted, the brain may be injured. This type of injury can occur because one hemisphere of the brain moves relative to the other causing blood vessels to burst. However, agency analysis of crash tests has shown that the whipping of the head of a lap-shoulder belt restrained occupant in 30 mph crash tests is usually substantially below the level at which angular acceleration could cause injury to the brain. Although the probability of non-contact injury to the brain appears low, the agency is still concerned about reducing the possibility of such injuries.

In addition, the agency is concerned about the possibility of non-contact neck injuries. The cadaver test discussed earlier in this notice found that 46 of the 100 cadavers experienced damage to the upper thorax-cervical spine region during the testing. Those same data show that neck injuries for belted cadavers are approximately 15 times more frequent than head injuries in frontal collisions.

The German study reported that neck injuries are caused primarily by rapid motion of the head and neck with respect to the torso, resulting in tears, separations, dislocations and fractures of neck tissues. The researchers examined the head motion of the cadavers and found two separate kinematic motions: translation, which is movement in a straight line, and translation-rotation. These types of motions can cause two separate injury mechanisms: first, shear forces in the neck caused by translation of the head relative to the torso and second, centrifugal or tension forces on the neck caused by the translation-rotation motion of the head.

To reduce the probability of non-contact injuries, the agency is proposing alternative requirements. Based on the comments, the agency will decide whether to retain the current requirement or to adopt one of the proposed alternatives.

The first alternative is to retain the current HIC calculation for contact situations. However, in non-contact situations, a HIC would not be calculated, but instead new neck injury criteria would be calculated. These new criteria may also reduce the possibility of brain injury. The neck criteria would be calculated differently depending upon whether the test uses the existing Part 572 test dummy or the Hybrid III test dummy, which the agency is proposing to adopt in a notice published elsewhere in today's **Federal Register.** The reason for the difference is that the Hybrid III test dummy has instrumentation in its neck to measure directly shear and tension forces in the neck and the existing Part 572 test dummy has no neck instrumentation. Therefore, the agency is proposing to use the Hybrid III's neck instrumentation and set limits on the shear and tension forces in the neck. The precise limits proposed for the Hybrid III are discussed in the separate notice proposing to adopt that test dummy.

Since neck forces can not be measured directly by the exising Part 572 test dummy, the agency is proposing to indirectly calculate such forces through the use of a head acceleration-based criteria. The neck injury limits set for the existing Part 572 test dummy would be similar to those set for the Hybrid III test dummy. The proposed limits for the existing Part 572 test dummy are based on a review of the Hybrid III test dummy head-neck impact response data collected by the agency's Safety Research Laboratory in its sled test series of lap-shoulder belt restrained occupants. Based on that data, the agency has determined that in non-contact situations there is an excellent correlation between the forces directly measured on the neck and the inertial accelerations of the test dummy's head. This is because

noncontact forces in the head (i.e., acceleration) can only be transmitted through the neck. Based on this direct corelation between head accelerations and neck forces, the agency has tentatively determined that an assessment of the potential for neck injury can be made with the existing Part 572 test dummy by using the acceleration data measured in the test dummy's head.

The proposed limits on tension and shear loads, expressed in g's, would set maximum levels that could not be exceeded for specified time durations. For example, the load producing tension forces in the neck could not exceed 66 g's during any time period and could not exceed 22 g's for any time duration greater than 43 milliseconds; the load producing shear forces in the neck could not exceed 61 g's during any time period and could not exceed 22 g's for any time duration greater than 43 milliseconds.

The second alternative proposed by the agency would calculate a HIC in both contact and non-contact situations, but limit the calculation to a specified time interval. GM, recognizing the difficulty of determining head contact during a crash test, suggested such an alternative in its December 19, 1983 comments on Standard No. 208 (See Docket 74-14, Notice 32, Entry 1666.) At present, the HIC is calculated for the entire crash duration. GM has suggested that calculating the HIC over the entire duration of the crash is not appropriate for long duration crashes. The proposed revision would respond to GM's suggestion by changing the HIC calculation so that it would be calculated for any time interval of up to 36 milliseconds during the crash duration. This would limit head acceleration to 60 g's or less, a level which is below the threshold at which head injury occurs.

The agency is proposing this new method for calculating the HIC because the current HIC calculation can produce an artificially high HIC for a crash which has a relatively low g's level, below the 60 g's injury threshold, but a long time duration. The agency has determined that the 36 millisecond time interval will assure that a HIC of 1000 is not exceeded for time duration up to 36 milliseconds and that the average g level on the head will not exceed 60 g's for any time period greater than 36 milliseconds. The 60 g acceleration limit was set as a reasonable head injury threshold by the originators of the Wayne State Tolerance Curve and should also serve as a surrogate limit for neck injury.

The agency requests comments and data on whether either of these two alternatives should be adopted in place of the existing HIC requirement.

Determination of Head Contact

In order to limit the HIC calculation only to events where there is head contact, the agency must determine what techniques should be used in its crash testing to establish the occurrence and duration of head contact. At present, there are several methods available for the establishment of head contact durations, but there are still questions about their levels of consistency and accuracy. Measurement technologies consist of the following major groups: photographic, electrical contact switches, electrical strain or pressure transducers, and other (such as laser, chemical, etc.). Each of these test methods have certain advantages and disadvantages for specific applications, e.g., photographic evidence is indisputable but visibility can not be always assured and time measurements are of low accuracy; electrical contacts in most environments provide relatively good accuracy, but the reliability of registering contact in the impact environment is relatively low; strain and pressure transducers are area contact sensitive and in some instances may fail to register; other contact type measurements may produce indications which are not part of the crash event and therefore are not always reliable. The agency solicits comments and test data on specifying one of the above techniques for the establishment of contact. The agency is also interested to determine whether redundant contact sensing methods should be used and requests comments on that issue.

NCAP Test Procedures

The July 17, 1984 final rule addressed the issues raised by the commenters concerning the test procedures used in Standard No. 208 by explaining that adoption of the procedures used in the New Car Assessment Program (NCAP) will help reduce variability, albeit by some unknown amount. This notice proposes to adopt several of the specific NCAP test procedures. The proposed test procedures cover two areas, test dummy positioning and vehicle loading.

The most significant proposed changes concern the positioning of the test dummies. During the Repeatability Test Program, the agency determined that the current positioning requirements for the passenger test dummy's feet are subject to misinterpretation. The problem arose in the positioning of the feet in vehicles which do not have a flat floor pan, but instead have a portion of the wheel well that is a part of the floor. Placing the feet on part of the wheel well could result in the test dummy's knees being pushed rearward and upward by the deformation of the wheel well to a position where it could be more easily contacted by the test dummy's head. Contact between the knee and the head can result in a high Head Injury Criterion reading. The proposed foot positioning procedures make clear that the test dummy's feet are not to be placed on the wheel well.

The proposed vehicle loading procedures would also modify the current fuel system requirements to reduce slightly the amount of variability in filling the fuel system. In addition, new procedures would be added to ensure that, once the vehicle is loaded with all the necessary test dummies and other test equipment, the vehicle's attitude is within specified limits.

Due Care

During the recent rulemaking on Standard No. 208, Ford Motor Co. urged the adoption of a "design to conform" requirement for the standard. The July 11, 1984 final rule did not adopt Ford's suggestion since the design to conform approach can introduce unacceptable subjectivity into the determination of whether a manufacturer complies with a standard.

The agency recognizes that because of the complexity of the requirements of Standard No. 208, manufacturers are concerned that the rule state that the due care provision of the National Traffic and Motor Vehicle Safety Act (15 U.S.C. 1397(b)(2)) applies to compliance with standard. This notice proposes to amend the standard to state explicitly that a vehicle shall not be deemed in noncompliance if its manufacturer establishes that it did not have reason to know in the exercise of due care that such vehicle is not in conformity with the standard. This showing shall be consistent with those made under the "due care" provision of the Act.

Oblique Crash Tests

The frontal barrier crash requirement specifies the level of injury criteria that shall not be exceeded when the vehicle, traveling longitudinally forward at any speed up to and including 30 mph, impacts a fixed collision barrier that is perpendicular to the line of travel of the vehicle or at an angle up to 30 degrees in either direction from the perpendicular to the line of travel of the vehicle.

The SNPRM contained a proposal to eliminate the requirement to test compliance at angles up to 30 degrees from the longitudinal direction. This proposal was based on agency research,

as well as data from Ford, which demonstrated a lower crash pulse in oblique tests than in frontal tests, resulting in less serious injury measurements on test dummies. The agency tentatively concluded that occupants would be protected in oblique crashes if the injury criteria could be met in a direct frontal crash. Thus, a separate compliance test was unnecessary and redundant. A number of comments were submitted in response to this proposal as discussed below. The July 1984 final rule reiterated the agency's belief that the oblique test requirement may not be necessary and thus may not meet the need for motor vehicle safety and unnecessarily add to compliance costs. However, in that final rule, it was stated that prior to taking final action, additional test data and comments on the oblique test requirement would be sought. We are hereby requesting additional data regarding the effects upon safety and on automatic restraint development and administrative and compliance costs if the requirement is deleted. We are also requesting comments on the issue of international harmonization of test requirements.

Comments to the SNPRM

In response to the SNPRM, Ford restated its belief that the oblique test is redundant and merely adds to the cost of testing, adversely affects leadtime and adds more unpredictability to the testing. Ford referenced material it had submitted previously to NHTSA which contained data on 30 degree angular vs. frontal tests. These data related to Ford's 33-car barrier crash tests of 1972 Mercury airbag vehicles. Ford's February 1976 report on the subject, "Airbag Crash Test Repeatability" (ESRO Report No. S-76-3), stated that the results of the angular crashes were lower in magnitude and had less variability than the frontal crashes. In twelve frontal tests, average driver and passenger HIC values were 479 and 462, respectively. In angular tests, the respective means for HIC were 185 and 330, well below the values in the frontal crashes.

Chrysler, BMW, Volvo, Nissan, Mercedes, Honda, and Mazda agreed with the proposal in the SNPRM to eliminate the requirement, claiming that no insight in restraint performance was provided by the test, it was not essential for verifying compliance since test results were lower than in the direct frontal test, and thus it only contributed to leadtime and testing costs. Mazda was the only company to provide data to support its conclusion. Mazda provided the results of a single test which showed a driver HIC of 779 and a passenger value of 758 in a frontal crash test using an experimental two-point passive belt while the corresponding values in the angular test were 488 and 302. Mercedes also stated that the oblique test is an obstacle to producing airbags.

Several other commenters also favored the deletion of the oblique test. IIHS said its support was based on the assumption that deletion of the test would promote the use of airbags. The Breed Corporation cited confidential data it had seen from manufacturers as the basis for its support.

Several commenters did not endorse the proposed deletion of the oblique test. The July 1984 final rule referred to discussions between GM and NHTSA, in which GM based its lack of support for the deletion of the oblique test on the belief that the test is more representative of real world crashes than the frontal test. GM also said that, regardless of the agency's decision, it would continue to conduct oblique tests. GM stated, however, that it has no objection to the test being deleted from the standard. Saab opposed the deletion of the requirement, terming the proposal "a way to cover up for a weakness in the airbag system." VW stated that an oblique test should be retained for vehicles which do not include upper torso belts. This would include airbag equipped cars or cars with "friendly interiors," and, under today's proposal, convertibles. As previously stated in the final rule, in discussions with NHTSA, Saab did not eleborate on their assertion that deletion of the test would be a "cover up" for airbag deficiencies, nor did VW explain why they believed the test necessary for airbags but not automatic belts.

Peugeot and Renault also opposed deletion of the oblique test, arguing that it is more respresentative of the majority of actual crashes, and instead urged deletion of the perpendicular test. They stated that retaining the oblique test and deleting the perpendicular test would result in harmonization with a European regulation (WP 29/R237/REV 1). VW recommended deleting the perpendicular test since the forthcoming Economic Commission for Europe (ECE) regulation on crash protection will have only an oblique test.

The Center For Auto Safety opposed deletion of the oblique test, arguing that this could compromise occupant protection.

Recent Test Results

Recent test data on six vehicles obtained by the agency for belted occupants in perpendicular frontal and oblique crash tests for the New Car Assessment Program, and data obtained from compliance tests of air bag restraint systems in perpendicular and oblique frontal crash tests, support the proposal to eliminate the olbique tests requirement. Information based on test data confirm that the crash pulse is less severe in oblique test, resulting in less serious injury measurements on test dummies. The tests showed lower dummy injury readings in angular crashes, especially for HIC and chest g's, with a few exceptions for femur injury readings. Further, based on a general analysis of motion picture film recorded in the New Car Assessment Program during the 30 degree oblique frontal crash test, it appears that the principal direction of travel of test dummies in the test does not exceed 10 degrees from the longitudinal center line of the vehicle. Therefore, the principal direction of forces on the test device in a 30 degree oblique test is similar to direction of forces in a perpendicular impact test.

Although the test dummy measurements appear to be less severe in oblique tests of restrained occupants, the agency notes that those vehicles may have been produced to comply with the 30 degree oblique test. The agency seeks comment on whether the above vehicles were specifically designed to meet a 30 mph, or any other, oblique crash test at the injury levels specified in Standard No. 208.

Questions

To assess whether the retention of the oblique test requirement is not necessary to meet the need for safety, and to assess related matters, the agency is particularly interested in obtaining data and comments on the following issues.

1. Would air bag system designs which currently comply with both the perpendicular and angular test requirements be affected by the deletion of the oblique test? Would there be any effect on air bag design which might affect occupant crash protection? (e.g., would an air bag large enough to provide occupant crash protection in a perpendicular crash be also large enough to provide occupant crash protection in an angular crash?)

2. Occupant rotation with a 2-point automatic belt is more pronounced as these belts allow free rotation of the occupant's hips. Would occupant protection using a 2-point or 3-point automatic belt system be affected by the deletion of the oblique test requirement?

3. In the case of "passive interiors" or other non-belt technology, the agency

seeks additional data and comments on whether the perpendicular frontal impact crash tests adequately measure the effectiveness of these technologies in reducing injuries and fatalities resulting from such things as A-pillar impacts and vehicle intrusion in oblique crashes.

4. Test data obtained by the agency in the New Car Assessment Program indicated that, while dummy injury readings were lower for HIC and chest g's in oblique tests than for perpendicular tests, femur injury readings were higher in several cases. In light of these data, does the oblique test requirement contribute significantly to the evaluation and prevention of femur injuries?

5. What are the administrative costs relating to compliance with the 30 degree oblique test requirement?

6. What would be the effect on research and development and vehicle design and construction costs and leadtime to manufacturers if the 30 degree oblique test is eliminated? Are those effects different for the different types of automatic crash protection systems?

7. Peugeot and Renault supported the retention of the oblique test and deletion of the perpendicular test. They stated that this would be harmonized with a European regulation (WP/29/R237/REV 1). Volkswagen also recommended deleting the perpendicular test since the forthcoming regulation on crash protection from the Economic Commission for Europe will only have an oblique test. The agency requests comments on this issue of the international harmonization of testing. Should changes be made in the frontal barrier crash requirements as suggested by Peugeot, Renault, or VW, in order to further international harmonization? What effect would this have on system design?

Dynamic Testing of Manual Belts

This notice also proposes that manual lap-shoulder belts installed at the outboard seating positions of the front seat of four different vehicle types comply with the dynamic testing requirements of section S5.1 of Standard No. 208. Those requirements provide for using anthropomorphic dummies in vehicle crash tests for measuring the level of protection offered. The four vehicle types which would be subject to this requirement are passenger cars and light trucks, small van-like buses, and light multipurpose passenger vehicles. (The agency considers light trucks, small van-like buses, and light multipurpose passenger vehicles to be vehicles with a Gross Vehicle Weight Rating (GVWR) of 10,000 pounds or less and an unloaded vehicle weight of 5,500 pounds or less. The 5,500 pound unloaded vehicle weight limit is also used in Standard No. 212, *Windshield Retention*, and Standard No. 219, *Windshield Zone Intrusion*. The limit was adopted in those standards on November 29, 1979 (44 FR 68470) to reduce compliance problems for final-stage manufacturers. Commenters are referred to the November 1979 notice for a complete discussion of the 5,500 pound limit.)

(As discussed earlier, the dynamic test would not apply to manual belts used in convertibles. In addition, a new dynamic test would not be required for a lap belt, installed in accordance with S4.1.2.1 (c)(2) of Standard No. 208, used with an air bag system meeting the occupant crash protection requirements of the standard. The standard currently provides that such a lap belt must be dynamically tested in combination with the air bag in a frontal crash test.)

Standard No. 208 currently specifies that passenger cars, light trucks, and light multipurpose passenger vehicles may be equipped with Type 2 (i.e., lap and shoulder belts) safety belts, which conform with the requirements of Standard No. 209, *Seat Belt Assemblies* (49 CFR 571.209), at the front outboard seating positions. In small van-like buses, Standard No. 208 specifies that the driver's seating position may be equipped with either a Type 1 or Type 2 safety belt. Standard No. 209 does not require that safety belts be installed in vehicles and then subjected to crash forces. Instead, the standard tests safety belts as separate pieces of equipment. The safety belts are tested for strength and other qualities in laboratory bench tests. Once a safety belt is certified as complying with the requirements of Standard No. 209, it may be installed in a vehicle without any further testing or certification as to its performance in that vehicle.

There are some significant trends which have developed recently which lead NHTSA to propose that vehicle manufacturers be required to certify the compliance of manual belts with the dynamic testing requirements of Standard No. 208. In essence, this proposal would require that the combination of the manual belts as well as the vehicle's structure and interior be tested to ensure that the combination provides adequate protection to vehicle occupants. One trend which forms the basis for this proposal is the downsizing in recent years of all four vehicle types covered by this proposal. Smaller vehicles means smaller interior spaces and therefore front seat occupants are closer to potentially hostile vehicle interior surfaces, such as windshield headers, A-pillars, instrument panels, and the like. Closer physical proximity to these surfaces increases the possibility of occupants contacting them in a crash and being injured.

The other significant trend has been the introduction of shoulder-belt tension relieving devices, particularly on domestically-produced passenger cars. The use of shoulder belt tension-relieving devices can add additional slack to the belt, which allows more forward movement by the occupant. This gives rise to the possibility that, in the case of excessive slack, unsafe levels of this forward movement could occur for restrained vehicle occupants. In a crash, it is important that forward movement of an occupant be minimized. Forward movement increases the chances of occupant contact with potentially hostile interior surfaces. Further, unrestrained forward movement allows higher acceleration of the head and chest before the occupant is either restrained by the shoulder belt or contacts the vehicle interior surfaces. The greater acceleration of the head and chest increases the chances of serious injury to the occupant. Therefore, the agency has tentatively concluded that dynamic testing of manual belts may be necessary to ensure that the belt, vehicle structure, and vehicle interior combination provide a minimum level of safety for vehicle occupants.

Accordingly, this notice proposes to require that manual belts in passenger cars be certified using the same test procedures and achieving the same level of occupant protection as automatic occupant protection systems. If shoulder belt tension-relieving devices are present on the manual belts, those devices would be adjusted in testing to introduce the amount of slack that is recommended by the manufacturer for the shoulder belt under normal use conditions in accordance with the instructions in the owner's manual. Further, the owner's manual would be required to warn the reader that the tension-relieving device should not be used to introduce slack beyond the maximum amount specified therein, and that to do so could significantly reduce the effectiveness of the belt in the event of a crash. For a further disussion of this issue, see the notice on comfort and convience of safety belts published elsewhere in today's **Federal Register**.

This notice also proposes that manual belts in light trucks, buses, and MPV's be certified according to the same dynamic test procedures used to certify automatic restraints, even though such vehicle will not be required to be

equipped with automatic restraints. The downsizing discussed at the outset of this section can be dramatically seen in these vehicles also, as exemplified by the new smaller pickup trucks and the "mini-vans" introduced in recent years. This trend brings vehicle occupants closer to potentially hostile interior surfaces. Additionally, many person have shifted from purchasing passenger cars to purchasing light trucks and MVPs. For instance, many persons who would have purchased station wagons twenty years ago now purchase passenger vans or light pickup trucks. NHTSA believes it is reasonable that occupants of these vehicles be assured that their belts, in combination with the vehicle's structure and interior geometry, provide a minimum level of safety.

The agency is requesting comments on whether there will be any additional costs which would be imposed on manufacturers of light trucks, buses, and MPV's by this proposed requirement; and if there were, whether they would be more than a few dollars per vehicle. These vehicles are generally crash-tested now, so that the manufacturer can certify compliance with Standard No 212, *Windshield Mounting*, Standard No. 219, *Windshield Zone Intrusion*, and Standard No. 301, *Fuel System Integrity*. Test dummies are inside the vehicles during these crash tests, primarily for the purpose of adding some ballast to the vehicles. The additional steps, for vehicle testing, which would be needed to certify compliance with this proposed requirement would be adding the necessary instrumentation to the test dummies and recording the measurements.

These proposed requirements would take effect on September 1, 1989, and only if the Secretary determines that two-thirds of the population is covered by mandatory belt usage laws, thereby rescinding the requirement that automatic protection be provided for occupants of the outboard seating positions in the front seat. Should such a determination be made, it is important that users of those belts be assured that they are as equally protected as if automatic restraints were in those particular vehicles. Absent such a determination, application of the dynamic testing requirements to manual safety belts would be unnecessary since those belts would not be permitted in the outboard seating positions of the front seat.

The proposed requirements would, if adopted, probably require modifications to some vehicles as currently manufactured. The results of this agency's New Car Assessment Program (NCAP), in which the vehicles are subjected to a 35 mph frontal barrier crash, show that 58 percent of the tested vehicles fail to meet one or more of the injury criteria specified in Standard No. 208. While it is true that vehicles are objected to significantly higher force levels in the NCAP testing than in Standard No. 208 testing (vehicles must absorb 36 percent more energy in a 35 mph crash than in a 30 mph crash), there is a countervailing aspect in the NCAP tests. The NCAP test procedures provide for removing all slack from the shoulder belts prior to conducting the tests. Under the procedure proposed in this notice, vehicles with shoulder belt tension-relieving devices would be tested with some slack introduced into the belt system. The agency requests specific comments on the level, if any, of vehicle modifications necessary to ensure compliance with this requirement by September 1, 1989.

As an adjunct to this rulemaking, this notice also proposes to amend Standard No. 209 to exempt belt assemblies certified as complying with these dynamic testing requirements from the webbing attachment hardware and assembly performance requirements of S4.4 of Standard No. 209. In addition, the notice proposes to amend Standard No. 210 to exempt dynamically tested belts from the anchorage location requirements of that standard. Standard No. 210 currently has the same anchorage location exemption for automatic belts. Continued application of those requirements to those manual belts would be unnecessary since the same aspects of performance would be indirectly tested in the dynamic testing. Further, this amendment would permit vehicle manufacturers maximum freedom to design and install manual belts in any way that ensures adequate protection for the user in the event of a crash.

This notice proposes that these amendments take effect on September 1, 1989. An earlier effective date could require the diversion of industry resources away from designing automatic restraint systems for passenger cars toward requiring improvements to manual belt systems on vehicles where manual belt systems might not be permitted at these seating positions. Additionally, this leadtime will allow the manufacturers to minimize the costs associated with any vehicle modifications necessary to certify compliance with these proposed occupant protection requirements.

Phase-In

The phase-in requirements of the July 1984 final rule may be summarized as follows. Subject to the enactment of state mandatory belt usage laws covering at least two-thirds of the U.S. population, manufacturers must install automatic restraints in an increasing percentage of production over a three-year period. In the 12-month period beginning September 1, 1986, each manufacturer must install automatic restraints in a number of passenger cars equivalent to at least 10 percent of the average annual production of that manufacturer during the preceding three-year period; in the 12-month period beginning September 1, 1987, each manufacturer must install automatic restraints in a number of passenger cars equivalent to at least 25 percent of the average annual production of that manufacturer during the preceding three-year period; and in the 12-month period beginning September 1, 1988, each manufacturer must install automatic restraints in a number of passenger cars equivalent to at least 40 percent of the average annual production of that manufacturer during the preceding three-year period. Effective September 1, 1989, manufacturers must equip all passenger cars with automatic restraints.

In its petition for reconsideration of the July 1984 final rule, the Automobile Importers of America (AIA) requested clarification of the term "manufacturer". That organization noted that passenger cars may have more than one manufacturer and requested clarification of which company is to be treated as a vehicle's manufacturer for purposes of calculating average annual production. AIA stated that, without such clarification, double counting or undercounting would likely occur. That organization suggested that it would be appropriate to permit the manufacturers involved to agree on a designation of the company to be treated as the manufacturer of such cars. AIA suggested that if no agreement amount the manufacturers were reported to NHTSA, the manufacturer marketing the cars in the United States should be required to include those vehicles in computing its base production. AIA stated that this arrangement woud be consistent with the objectives of the rule because the overall number of cars equipped with automatic restraints would be unaffected. Subsequent to issuance of the final rule, General Motors, Toyota and New United Motors Manufacturing, have made similar comments. New United Motors is a joint

venture between GM and Toyota for the purpose of assemblying in the U.S. a motor vehicle designed by Toyota and sold by GM.

The agency generally agrees with AIA, GM, Toyota, and New United Motors concerning this issue. Section 102(5) of the National Traffic and Motor Vehicle Safety Act defines "manufacturer" as "any person engaged in the manufacturing or assembling of motor vehicles . . ., including any person importing motor vehicles . . . for resale." A passenger car may thus have more than one manufacturer in two types of instances: (1) The vehicle may be manufactured or assembled by two or more companies, and (2) The vehicle may be manufactured or assembled outside the United States by one or more companies and then imported by another company. In order to avoid possible double counting or undercounting in such instances, the agency believes it is appropriate to clarify who shall be treated as the manufacturer for purposes of calculating average annual production of passenger cars for each manufacturer and amount of passenger cars manufactured by each manufacturer.

In order to provide maximum flexibility to manufacturers while assuring that percentage goals are met, this notice proposes to permit manufacturers to determine, by contract, which of them will count such passenger cars as its own. The notice proposes two rules of attribution in the absence of such a contract. First, a passenger car which is imported for purposes of resale would be attributed to the importer. The agency intends that this proposed attribution rule would apply to both "grey market" importers as well as importers authorized by the vehicle's original manufacturer. (In this context, the so-called "grey-market" refers to the importation of cars which are originally manufactured for sale outside the U.S. and which are them imported without the manufacturer's authorization into the U.S. by either an importer for purposes of resale. The Vehicle Safety Act requires that such vehicles be brought into conformity with Federal motor vehicle safety standards.)

Under the second proposed attribution rule, a passenger car manufactured in the United States by more than one manufacturer, one of which also markets the vehicle, would be attributed to the manufacturer which markets the vehicle. These two proposed rules would generally attribute a vehicle to the manufacturer which is most responsible for the existence of the vehicle in the United States, i.e., by importing the vehicle or by manufacturing the vehicle for its own account as part of a joint venture, and which is responsible for marketing the vehicle. (Importers generally market the vehicles they import). The agency requests comment on whether these proposed requirements adequately cover all possible situations and on the appropriateness of the specific proposed rules of attribution. Depending on the comments, the agency may adopt additional rules of attribution and/or different rules.

Ford stated that the phase-in provisions should take account of new developments in arrangements for the manufacture and marketing of motor vehicles, noting the situation where a manufacturer sponsors the design and manufacture of a vehicle for its own account, as a joint venture or as an outside purchaser. Ford provided an example of such an arrangement where it is importing passenger cars from Europe, but stated that should such an arrangement be carried out wholly within the United States, the manufacturer sponsoring the design and assembly of the vehicle would have no incentive under the present phase-in provisions to direct that cars manufactured for its account be equipped with automatic restraints. While Ford did not explain the reason for this conclusion, that company apparently concluded that such a sponsor would not be considered a manufacturer of such cars for purposes of the phase-in provisions.

As noted above, the amendment proposed by this notice would permit a passenger car produced by more than one manufacturer to be attributed, by contract, to any one of the manufacturers. Since the National Traffic and Motor Vehicle Safety Act places the responsibility of compliance with safety standards on manufacturers, the agency does not have authority to attribute a vehicle to a party other than one of the vehicle's manufacturers. However, the agency considers the language in section 102(5) of the Vehicle Safety Act that a manufacturer is "any person engaged in the manufacturing or assembling of motor vehicles . . ." to be sufficiently broad to include sponsors, depending on the circumstances. For example, if a sponsor contracts for another manufacturer to produce a design exclusively for the sponsor, the sponsor may be considered the manufacturer. This follows from application of basic principles of agency law. In this case, the sponsor is the principal. On the other hand, the mere purchase of vehicles for resale by a company which also is a manufacturer of motor vehicles does not make the purchaser the manufacturer of those vehicles.

AIA also requested clarification of the term "average annual production." That organization stated that it assumes that average annual production refers only to cars manufactured for sale in the United States, and not a company's worldwide production. Nevertheless, AIA requested that its interpretation be confirmed in an amendment to the rule. AIA is correct that the average annual production refers only to cars manufactured for sale in the United States. Since all of NHTSA's safety standards apply only to vehicles manufactured for sale in the United State, the agency does not believe an amendment is necessary.

Consistent with this view, the agency notes that so-called "grey-market" cars are not included in the average annual production of the original manufacturer or its authorized importer. As discussed above, persons who import vehicles for purposes of resale are "manufacturers" under the Safety Act. Under the proposed attribution rules, such cars would be attributed to the importer, who would be responsible for meeting the percentage phase-in requirements, as well as for making the necessary reports proposed in this notice. The agency requests comments on whether treating grey-market car importers in the same fashion as other importers would adequately assure the compliance of the grey market cars with the phase-in requirements.

Several manufacturers and manufacturer organizations requested greater flexibility in meeting the minimum percentage requirements for the three years of the phase-in. Several manufacturers suggested that manufacturers be given credits for early introduction of larger numbers of automatic restraints than would be required by the phase-in percentages. These credits could be counted toward the minimum percentage requirements of later years. Nissan and the Automobile Importers of America suggested that manufacturers also be permitted to count automatic restraint equipped vehicles produced in later years of the phase-in toward meeting the minimum percentage requirements of earlier years. AIA suggested that such a scheme could include a penalty attached to any carry-back.

The agency tentatively agrees that it would be appropriate to permit manufacturers who exceed the minimum percentage phase-in requirements in earlier years to count those extra vehicles toward meeting the minimum percentage requirements of later years.

This would encourage early introduction of larger numbers of automatic restraints and provide increased flexibility for manufacturers, while continuing to assure an orderly build-up of production capability for automatic restraint equipped cars as contemplated by the final rule. The total number of automatic restraint cars required by the end of each time period would not change.

The agency cannot, however, agree to any type of carry-back scheme, even if a penalty is attached. Under such a scheme, manufacturers could wait until the second or third year before producing any automatic restraint equipped vehicles, thereby delaying the safety benefits from those vehicles and undermining the purposes of the phase-in.

The agency is accordingly proposing to permit manufacturers who exceed the minimum percentage phase-in requirements in the first or second years to count those extra vehicles toward meeting the requirements in the second or third years. In addition, manufacturers could also count any automatic restraint vehicles produced during the one year preceding the first year of the phase-in.

Phase-In Reporting Requirements

The July 1984 notice stated that, to ensure compliance with the phase-in requirements, each manufacturer would be required to submit a report to the agency within 60 days of the end of each model year certifying that it has met the applicable percentage requirement. The notice stated that the report would have to separately identify, by Vehicle Identification Number (VIN), those cars that the manufacturer has equipped with automatic seatbelts and those cars that it has equipped with automatic airbags or some other form of occupant protection technology. The notice indicated that a notice of proposed rulemaking on this matter would be issued.

This notice proposes to establish a new Part 585, *Automatic Restraint Phase-in Reporting Requirements.* As discussed below, the proposal differs slightly from that discussed by the July 1984 notice, as part of an agency effort to minimize administrative burdens for manufacturers while assuring that the agency has sufficient information for purposes of enforcements.

As contemplated by the July 1984 notice, Part 585 would require manufacturers to submit three reports to NHTSA, one for each of the three phase-in periods. Each report, covering production during a 12-month period beginning September 1 and ending August 31, would be required to be submitted within 60 days of the end of such period.

Information required by each report would include a statement regarding the extent to which the manufacturer had complied with the applicable percentage phase-in requirement of Standard No. 208 for the period covered by the report; the number of passenger cars manufactured for sale in the United States for each of the three previous 12-month production periods; the actual number of passenger cars manufactured during the reporting production (or during a previous production period and counted toward compliance in the reporting production period) period with automatic seat belts, air bags and other specified forms of automatic restraint technology, respectively; and brief information about any express written contracts concerning passenger cars produced by more than one manufacturer, which affect the report. (A discussion of how passenger cars produced by more than one manufacturer are to be treated for purposes of the phase-in requirements is provided elsewhere in this notice. Manufacturers would be permitted to determine, by contract, which of them will count such passenger cars as its own. Rules of attribution would be established for situations where there is no such contract. The agency requires information about such contracts for purposes of enforcement since the contracts affect which vehicles are attributed to a particular manufacturer and hence how the phase-in provisions apply to the manufacturer.)

Chrysler, Ford, and other manufacturers have petitioned the agency to reconsider the requirement that the number of cars that must be equipped with automatic restraints must be based on a percentage of the average annual production for the past three model years. They argued that if car sales were to drop drastically during the phase-in period, then the number of vehicles that they would have to equip with automatic restraints based on their prior three year sales volume would be a significantly greater percentage of their actual production than intended by the final rule. For example, Ford said that if its "sales of 1989 models were to drop as drastically as its sales of 1980 models dropped versus the three previous model years' sales, Ford would be required to required to equip 70 percent of its 1989 model production with passive restraints, rather than 40 percent" as specified in the final rule. Ford and other manufacturers asked the agency to adopt an alternative that would permit manufacturers to equip the required percentage of its actual production of passenger cars with automatic restraints during each affected year. The agency believes that such an alternative has merit and is proposing to adopt it as an alternative means of compliance, at the manufacturer's option. Should the agency decide to adopt this alternative means of compliance, after consideration of the public comments on this proposal, the agency would make conforming changes in the final rule on reporting requirements. For example, it would not be necessary to report the production data for the preceding 36 months if the final rule permits, and the company elects, to comply on the basis of actual production during the affected year. Therefore, commenters are requested to consider the related effects of the proposals for reporting requirements and for the alternative method for determining the compliance base.

In order to keep administrative burdens to a minimum, the agency has decided that the required report need not use the VIN to identify the particular type of automatic restraint installed in each passenger car produced during the phase-in period which is reported as having automatic restraints. Since such information could be necessary for purposes of enforcement, however, the agency is proposing to require that manufacturers maintain records until December 31, 1991 of the VIN and type of automatic restraint for each passenger car produced during the phase-in priod which is reported as having automatic restraints. Although grey-market cars are not required to have a US-format VIN number, those cars would still have a European-format VIN number and thus grey-market importers would be required to retain that VIN information. (The agency is currently considering a petition from Volkswagen requesting that grey-market cars be required to have US-format VINs.) The reason for retaining the information until 1991 is to ensure that such information would then be available until the completion of any agency enforcement action begun after the final phase-in report is filed in 1990. The agency believes this requirement would meet the needs of the agency, with minimal impacts on manufacturers.

Impact Analyses

The agency has considered the economic and other effects of the proposals in this notice and determined that they are not major within the meaning of Executive Order 12291 nor significant within the meaning of DOT's

regulatory policies and procedures. A Preliminary Regulatory Evaluation (PRE) has been prepared and placed in the public docket.

Three of the proposals contained in this notice potentially have measurable economic consequences, which are fully detailed in the PRE and briefly discussed below. Those three proposals concern the occupant crash protection requirements for convertibles, the use of dynamic testing for manual belt systems and the deletion of the oblique test. The remaining proposals in this notice concern technical changes that are not anticipated to have more than minimal economic effects on either consumers or manufacturers and thus require no regulatory evaluation.

The potential effects of the convertible proposals will depend on whether the proposed alternative is ultimately adopted. If there is no change in the provision requiring convertibles to meet the same requirements as other passenger cars, the agency expects that the most likely means of compliance will be air bag systems. If produced in low volumes, the potential cost could range from $600–$1500. The sales effect of such a price increase are unknown. The agency estimates that air bag equipped convertibles would prevent from 37–76 more fatalities and from 1,162–2,056 more serious injuries than the current lap belt equipped fleet.

The use of automatic lap/shoulder or automatic shoulder belts to meet the standard would not be possible without modifying current convertible designs. The agency does not have a cost estimate for the possible structural changes needed to incorporate automatic belts and request manufacturers to provide cost data on this issue.

The proposed dynamic testing of lap-shoulder belt systems could result in increased testing costs to vehicle manufacturers. At present, manufacturers already conduct crash testing for Standards No. 212, *Windshield Mounting*, Standard 219, *Windshield Zone Intrusion*, and Standard No. 301, *Fuel System Integrity*. Manufacturers can combine the dynamic testing of safety belts with the testing done to meet these other standards and thus avoid the cost of testing an additional vehicle for the proposed safety belt requirements. The agency estimates that the incremental costs associated with the instrumentation and measurements needed for the dynamic testing of safety belts in passenger cars, light trucks and MPV's and small van-like buses would be approximately $8,500 per test, excluding the cost of the vehicle.

As discussed in the preamble section on oblique testing, the safety effects of deleting the oblique tests are not fully known. For example, some data indicate that HIC and chest injury measurements are lower in oblique tests, while femur injury measurements are higher. The agency is seeking additional data on the possible safety consequences of deleting the oblique test so that it can determine the possible effects on safety. The potential economic effects of deleting the requirement would be reductions in manufacturer testing costs and in costs associated with vehicle modifications necessary to pass the oblique test. The agency does not have information on which specific vehicle modifications are necessary to meet the oblique tests and requests comments from manufacturers on the potential cost savings associated with deleting the test.

NHTSA has also considered the impacts of these proposals under the Regulatory Flexibility Act. I hereby certify that this proposed action will not have a significant economic effect on a substantial number of small entities. Accordingly, the agency has not prepared a preliminary regulatory flexibility analysis.

Few, if any, passenger car manufacturers would qualify as small entities. The suppliers of webbing and other manual or automatic restraint components would not likely be significantly affected. Small organizations or governmental units should not be significantly affected since the price increases associated with this proposed action should not affect the purchasing of new cars by these entities.

The reporting and recordkeeping requirements proposed in this notice are considered to be information collection requirements as that term is defined by the Office of Management and Budget in 5 CFR Part 1320. Accordingly, those proposed requirements are being submitted to OMB for its review pursuant to the Paperwork Reduction Act. Comments on the proposed information collection requirements should be submitted to: Office of Management and Budget, Office of Information and Regulatory Affairs, Washington, DC 20503, Attention: Desk Officer for NHTSA. It is requested that comments sent to OMB also be sent to the NHTSA rulemaking docket for this proposed action.

Finally, the agency has analyzed this proposal for purposes of the National Environmental Policy Act. The agency has determined that this action would not have any significant impact on the quality of the human environment.

Interested persons are invited to submit comments on the proposal. It is requested but not required that 10 copies be submitted.

All comments must be limited not to exceed 15 pages in length. (49 CFR 553.21) Necessary attachments may be appended to these submissions without regard to the 15-page limit. This limitation is intended to encourage commenters to detail their primary arguments in a concise fashion.

If a commenter wishes to submit certain information under a claim of confidentiality, three copies of the complete submission, including purportedly confidential information, should be submitted to the Chief Counsel, NHTSA, at the street address given above, and seven copies from which the purportedly confidential information has been deleted should be submitted to the Docket Section. A request for confidentially should be accompanied by a cover letter setting forth the information specified in the agency's confidential business information regulation (49 CFR Part 512).

All comments received before the close of business on the comment closing date indicated above will be considered, and will be available for examination in the docket at the above address both before and after that date. To the extent possible, comments filed after the closing date will also be considered. However, the rulemaking action may proceed at any time after that date, and comments received after the closing date and too late for consideration in regard to the action will be treated as suggestions for future rulemaking. The NHTSA will continue to file relevant material as it becomes available in the docket after the closing date, and it is recommended that interested persons continue to examine the docket for new material.

Those persons desiring to be notified upon receipt of their comments in the rules docket should enclose, in the envelope with their comments, a self-addressed stamped postcard. Upon receiving the comments, the docket supervisor will return the postcard by mail.

List of Subjects

49 CFR Part 571

Imports, Motor vehicle safety, Motor vehicles, Rubber and rubber products, Tires.

49 CFR Part 585

Reporting and recordkeeping requirements.

PART 571—[AMENDED]

In consideration of the foregoing, 49 CFR 571.208 is proposed to be amended as follows:

§ 571.208 Standard No. 208; Occupant crash protection.

1. Section S4.1.3.1.2 would be revised to read as follows:

S4.1.3.1.2 Subject to S4.1.3.4(b) and S4.1.5 an amount of the cars specified in S4.1.3.1.1 equal to not less than 10 percent of the average annual production of passenger cars manufactured on or after September 1, 1983, and before September 1, 1986, by each manufacturer, shall comply with the requirements of S4.1.2.1.

2. Section 4.1.3.2. would be revised to read as follows:

S4.1.3.2.2 Subject to S4.1.3.4(c) and S4.1.5 an amount of the cars specified in S4.1.3.2.1 equal to not less than 25 percent of the average annual production of passenger cars manufactured on or after September 1, 1984, and before September 1, 1987, by each manufacturer, shall comply with the requirements of S4.1.2.1.

3. Section 4.1.3.3.2 would be revised to read as follows:

S4.1.3.3.2 Subject to S4.1.3.4(d) and S4.1.5 an amount of the cars specified in S4.1.3.3.1 equal to not less than 40 percent of the average annual production of passenger cars manufactured on or after September 1, 1985, and before September 1, 1988, by each manufacturer, shall comply with the requirements of S4.1.2.1.

4. Section S4.1.3.4. would be revised to read as follows:

S4.1.3.4 Calculation of complying passenger cars

(a) For the purposes of calculating the numbers of cars manufactured under S4.1.3.1.2, S4.1.3.2.2, or S4.1.3.3.2 to comply with S4.1.2.1, each car whose driver's seating position will comply with these requirements by means other than any type of seat belt is counted as 1.5 vehicles.

(b) For the purposes of complying with S4.1.3.1.2, a passenger car which:

(1) is manufactured on or after September 1, 1985, but before September 1, 1986,

(2) complies with S4.1.2.1, and

(3) is not counted toward compliance with S4.1.3.2 or S4.1.3.3, may be treated by the manufacturer as having been manufactured on or after September 1, 1986, but before September 1, 1987.

(c) For the purposes of complying with S4.1.3.2.2, a passenger car which:

(1) is manufactured on or after September 1 1985, but before September 1, 1987

(2) complies with S4.1.2.1, and

(3) is not counted toward compliance with S4.1.3.1 or S4.1.3.3, may be treated by the manufacturer as having been manufactured on or after September 1, 1987, but before September 1, 1988.

(d) For the purposes of complying with S4.1.3.3.2, a passenger car which:

(1) is manufactured on or after September 1, 1985, but before September 1, 1988,

(2) complies with S4.1.2.1, and

(3) is not counted toward compliance with S4.1.3.1 or S4.1.3.2, may be treated by the manufacturer as having been manufactured on or after September 1, 1988, but before September 1, 1989.

5. A new section S4.1.3.5 would be added to read as follow:

S4.1.3.5 *Passenger cars produced by more than one manufacturer.*

S4.1.3.5.1 For the purposes of calculating average annual production of passenger cars for each manufacturer and the amount of passenger cars manufactured by each manufacturer, under S4.1.3.1.2, S4.1.3.2.2 or S4.1.3.3.2, a passenger car produced by more than one manufacturer shall be attributed to a single manufacturer as folllows, subject to S4.1.3.5.2:

(a) A passenger car which is imported shall be attributed to the importer.

(b) A passenger car manufactured in the United States by more than one manufacturer, one of which also markets the vehicle, shall be attributed to the manufacturer which markets the vehicle.

S4.1.3.5.2 A passenger car produced by more than one manufacturer shall be attributed to any one of the vehicle's manufacturers specified by an express written contract, reported to the National Highway Traffic Safety Administration under 49 CFR Part 585, between the manufacturer so specified and the manufacturer to which the vehicle would otherwise be attributed under S4.1.3.5.1.

6. Section S4.1.4.1 would be added to read as follows:

S4.1.4.1 *Convertibles manufactured on or after September 1, 1989.* Each convertible shall meet the requirements of S4.1.2.1, S4.1.2.2, or S4.1.2.3. An occupant protection system that meets the requirements of S4.1.2.1 or S4.1.2.2 may be installed at one or more designated seating positions of a convertible that otherwise meets the requirements of S4.1.2.3.

7. A new section S4.6 would be added to read as follows:

S4.6 *Dynamic testing of manual belt systems.*

S4.6.1 Each passenger car, truck, bus and multipurpose passenger vehicle with a GVWR of 10,000 pounds or less and an unloaded vehicle weight of 5,500 pounds or less, which is equipped with a Type 2 seat belt assembly at each front outboard seating positions pursuant to S4.1.2.3, shall meet the frontal crash protection requirements of S5.1, when an anthropomorphic test device is restrained by the Type 2 seat belt assembly. Convertibles, open body type vehicles, walk-in van-type trucks, motor homes, vehicles designed exclusively to be sold to the U.S. Postal Service and vehicles carrying chassis-mount campers need not comply with the provisions of this paragraph.

S4.6.2 A Type 2 seat belt assembly subject to the requirements of S4.6.1 of this standard is not required to comply with paragraph S4.4 of Standard No. 209 (49 CFR 571.209) of this Part.

8. Section S6.2 would be revised to adopt one of the following alternatives:

Alternative One: Section S6.2 would be revised and a new section S6.5 would be added as follows:

S6.2 The resultant acceleration at the center of gravity of the head shall be such that the expression:

$$\left[\frac{1}{(t_2-t_1)} \int_{t_1}^{t_2} a\,dt \right]^{2.5} (t_2-t_1)$$

shall not exceed 1,000, where a is the resultant acceleration expressed as a multiple of g (the acceleration of gravity), and t1 and t2 are any two points in time during the crash of the vehicle when there is evidence of head contact with any part of the vehicle other than the belt system.

S6.5 If there is no evidence of head contact, then the acceleration measured at the center of gravity of the head shall not exceed either of the following:

(a) The upper limits of the curve shown in Figure 1 when measured by the accelerometer whose sensitive axis is oriented to record longitudinal fore and aft accelerations, and

(b) The upper limits of the curve shown in Figure 2 when measured by the accelerometer whose sensitive axis is oriented to record inferior-superior accelerations.

Alternative Two: Section S6.2 would be revised to read as follows:

S6.2 The resultant acceleration at the center of gravity of the head shall be such that the expression:

$$\left[\frac{1}{(t_2-t_1)} \int_{t_1}^{t_2} a\,dt \right]^{2.5} (t_2-t_1)$$

shall not exceed 1,000 where as is the resultant acceleration expressed as a multiple of g (the acceleration of gravity) and t1 and t2 are any two point in time during the crash of the vehicle which are separated by not more than a 36 millisecond time interval.

9. Section S7.4.2 would be revised to read as follows:

S7.4.2 *Webbing tension relieving device.* For any automatic seat belt assembly and any Type 2 seat belt assembly installed in the front outboard designated seating positions pursuant to S4.1.2.3 of this standard which includes either manual or automatic devices that permit the introduction of slack in the webbing of the upper torso restraint (e.g., "comfort clips" or "window-shade" devices), automatic seat belts shall comply with the occupant crash protection requirements of S5 and manual seat belts shall comply with S5.1 of this standard with the belt webbing adjusted to introduce the maximum amount of slack (in inches) that is recommended by the vehicle manufacturer in the owner's manual to be introduced into the shoulder belt under normal use conditions. The vehicle owner's manual shall explain how the tension relieving device works and shall specify the maximum amount of slack (in inches) which is recommended to be introduced under normal use into the belt by means of the tension-relieving device. The instruction shall also warn that introducing slack beyond the specified amount could significantly reduce the effectiveness of the belt in a crash. Any belt slack that can be introduced into the belt system by means of a tension relieving device shall be cancelled each time the belt is unbuckled and the adjacent vehicle door is opened.

10. Section 8.1.1(c) would be revised to read as follows:

S8.1.1(c) *Fuel system capacity.* With the test vehicle on a level surface, the fuel is pumped from the tank and the engine operated until it stops. Stoddard solvent then will be added to the test vehicle's fuel tank in an amount which is equal to 92 to 94 percent of the vehicle manufacturer's stated usable capacity, plus an additional amount to fill the entire fuel system from the fuel tank through the engine's induction system.

11. A new section 8.1.1(d) would be added to read as follows:

S8.1.1(d) *Vehicle test attitude.* The distance between a level surface and a standard point on the test vehicle's body directly above each wheel opening shall be determined in the "as delivered" condition. Delivery condition is the vehicle as received at the test site, with 100 percent of all fluid capacities, and all tires inflated to the manufacturer's specifications as listed on the tire placard or label. The distance between a level surface and the same standard points used above on the vehicle's body shall be determined in the fully "loaded" condition. The fully loaded condition is the test vehicle with a 50th percentile anthropomorphic test dummy in each front outboard designated seating position, plus the cargo load, as specified by the manufacturer on the vehicle's tire capacity placard, placed in the cargo area. The pretest vehicle attitude shall be equal to either the "as delivered" or "loaded" attitude or between the "as delivered" attitude and the "loaded" attitude.

12. Section 8.1.3 would be revised to read as follows:

S8.1.3 *Adjustable seat back placement.* Adjustable seat backs are in the manufacturer's nominal design riding position. This position can be measured in terms of specific latch or detent positions from the forward most seat back angle, or a dummy torso angle. If the vehicle is equipped with adjustable head restraints, each is adjusted to its highest adjustment position.

13. Sections 8.1.11 through 8.1.11.2.3 would be removed.

14. Sections 8.1.12 and 8.1.13 would be redesignated 8.1.11 and 8.1.12, respectively.

15. Section 10 would be revised to read as follows:

S10 *Dummy positioning procedures.* Anthropomorphic test dummies are positioned in the vehicle as specified in S10.1 through S10.8, and except as otherwise specified the dummies are not restrained during an impact by any means that require occupant action.

S10.1 *Vehicle equipped with front bucket seats.* In the case of a vehicle equipped with front bucket seats, dummies are placed at the front outboard designated seating positions with the test device torso against the seat back, and the thighs against the seat cushion to the extent permitted by placement of the dummy's feet in accordance with the appropriate paragraph of S10. The dummy is centered on the seat cushion of the bucket seat and its midsagittal plane is vertical and longitudinal.

S10.1.1 *Driver position placement.* At the driver's position, the knees of the dummy are initially set 14.5 inches apart, measured between the outer surfaces of the knee pivot bolt heads, with the left outer surface 5.9 inches from the midsagittal plane of the dummy. The right foot of the dummy rests on the undepressed accelerator pedal with the rearmost point of the heel on the floor pan in the plane of the pedal. If the foot cannot be, placed on the accelerator pedal, it is set perpendicular to the tibia and placed as far forward as possible in the direction of the geometric center of the pedal with the rearmost point of the heel resting on the floor pan. The plane defined by the femur and tibia centerlines of the right leg is as close as possible to vertical without inducing torso movement and except as prevented by contact with a vehicle surface. The left foot is placed on the toeboard with the rearmost point of the heel resting on the floor pan as close as possible to the point of intersection of the planes described by the toeboard and the floor pan. If the foot cannot be positioned on the toeboard, it is set perpendicular to the tibia and placed as far forward as possible with the heel resting on the floor pan. The femur and tibia centerlines of the left leg fall in a vertical plane except as prevented by contact with a vehicle surface.

S10.1.2 *Passenger position placement.*

S10.1.2.1 *Vehicles with a flat floor pan/toeboard.*

(a) The knees are initially set 14½ inches apart measured between the outer surfaces of the knee pivot bolt heads.

(b) The right and left feet are placed on the vehicle's toeboard with heel resting on the floor pan as close as possible to the intersection point with the toeboard. If the feet cannot be placed flat on the toeboard, they shall be set perpendicular to the lower leg centerlines and placed as far forward as possible with the heels resting on the floor pan.

(c) The right and left leg assemblies are placed so that the upper and lower leg centerlines fall in vertical longitudinal planes.

S10.1.2.2 *Vehicles with wheel house projections in passenger compartment.*

(a) The knees are initially set 14½ inches apart measured between outer surfaces of the knee pivot bolt heads.

(b) The right and left feet are placed in the well of the floor pan/toeboard and not on the wheelhouse projection. If the feet cannot be placed flat on the toeboard, they shall be set perpendicular to the lower leg centerlines and placed as far forward as possible with the heels resting on the floor pan.

(c) If it is not possible to maintain vertical longitudinal planes through the upper and lower leg centerlines and foot centerlines for each leg assembly then place the leg as close to parallel as possible.

S10.2 *Vehicle equipped with bench seating.* In the case of a vehicle which is equipped with a front bench seat, a dummy is placed at the left and right front outboard designated seating position, with the dummy torso against the seat back and the thighs against the seat cushion to the extent permitted by placement of the dummy's feet in accordance with the appropriate paragraph of S10.1.

S10.2.1 *Driver position placement.* The dummy is placed at the left front outboard designated seating position so that its midsagittal plane is vertical and longitudinal, and passes through the center point of the plane described by the steering wheel rim. The legs, knees, and feet of the dummy are placed as specified in S10.1.1.

S10.2.2 *Passenger position placement.* The dummy is placed at the right front outboard designated seating position as specified in S10.1.2, except that the midsagittal plane of the dummy is vertical, longitudinal, and the same distance from the longitudinal centerline as the midsagittal plane of the dummy at the driver's position.

S10.3 *Initial dummy placement.* With the dummy at its designated seating position as specified by the appropriate requirements of S10.1 or S10.2, place the upper arms against the seat back and tangent to the side of the upper torso and the lower arms and palms against the outside of the thighs.

S10.4 *Dummy settling.*

S10.4.1 *Dummy vertical upward displacement.* Slowly lift the dummy parallel to the seat back plane until the dummy's buttocks no longer contact the seat cushion or until there is dummy head contact with the vehicle's headlining.

S10.4.2 *Lower torso force application.* Using a dummy positioning fixture, apply a rearward force of 50 pounds through the center of the rigid surface against the dummy's lower torso in a horizontal direction. The line of force application shall be 6½ inches above the bottom surface of the dummy's buttocks. The 50 pound force shall be maintained with the rigid fixture applying reaction forces to either the floor pan/toeboard, the 'A' post, or the vehicle's seat frame.

S10.4.3 *Dummy vertical downward displacement.* While maintaining the contact of the horizontal rearward force application plate with the dummy's lower torso, remove as much of the 50 pound force as necessary to allow the dummy to return downward to the seat cushion by its own weight.

S10.4.4 *Dummy upper torso rocking.* Without totally removing the horizontal rearward force being applied to the dummy's lower torso, apply a horizontal forward force to the dummy's shoulders sufficient to flex the upper torso forward until its back no longer contacts the seat back. Rock the dummy from side to side 3 or 4 times so that the dummy's spine is at any angle from the vertical in the 14 to 16 degree range at the extremes of each rocking movement.

S10.4.5 *Upper torso force application.* With the dummy's midsagittal plane vertical, push the upper torso back against the seat back with a force of 50 pounds applied in a horizontal rearward direction along a line that is coincident with the dummy's midsagittal plane and 18 inches above the bottom surface of the dummy's buttocks.

S10.5 *Placement of dummy arms and hands.* With the dummy positioned as specified by S10.3 and without inducing torso movement, place the arms, elbows, and hands of the dummy, as appropriate for each designated seating position in accordance with S10.3.1 or S10.3.2. Following placement of the limbs, remove the force applied against the lower half of the torso.

S10.5.1 *Driver's position.* Move the upper and the lower arms of the dummy at the driver's position to fully outstretched position in the lowest possible orientation. Push each arm rearward, permitting bending at the elbow, until the palm of each hand contacts the outer part of the rim of the steering wheel at its horizontal centerline. Place the dummy's thumbs over the steering wheel rim, positioning the upper and lower arm centerlines as close as possible in a vertical plane without inducing torso movement.

S10.5.2 *Passenger position.* Move the upper and the lower arms of the dummy at the passenger position to fully outstretched position in the lowest possible orientation. Push each arm rearward, permitting bending at the elbow, until the upper arm contacts the seat back and is tangent to the upper part of the side of the torso, the palm contacts the outside of the thigh, and the little finger is barely in contact with the seat cushion.

S10.6 *Head adjustment.* Without inducing torso movement, position the head so that the surface of the transverse instrumentation mounting platform in the head is horizontal and the head midsagittal plane fails in a longitudinal plane.

S10.7 *Dummy positioning for latchplate access.* The reach envelopes specified in S7.4.4 are obtained by positioning an anthropomorphic test dummy in the driver's seat or passenger's seat in its forwardmost adjustment position. Attach the lines for the inboard and outboard arms to the test dummy as described in Figure 3 of this standard. Extend each line backward and outboard to generate the compliance arcs of the outboard reach envelope of the test dummy's arms.

S10.8 *Dummy positioning for belt contact force.* To determine compliance with S7.4.3 of this standard, position the anthropomorphic test dummy in the vehicle in accordance with the appropriate requirements specified in S10.1 or S10.2 and under the conditions of S8.1.2 and S8.1.3. Pull the belt webbing three inches from the dummy's chest and release until the webbing is within 1 inch of the dummy's chest and measure the belt contact force.

16. S11 would be removed.

17. S4.1.3.1.1, S4.1.3.2.1, S4.1.3.3.1, and S4.1.4 would be amended by adding a new second sentence to read as follows:

A vehicle shall not be deemed to be in noncompliance with this standard if its manufacturer establishes that it did not have reason to know in the exercise of due care that such vehicle is not in conformity with the requirement of this standard.

571.209 *Standard No. 209; Seat belt assemblies.*

1. A new paragraph S4.6 would be added, to read as follows:

S4.6 *Manual belts subject to crash protection requirements of § 571.208.*

(a) A Type 2 seat belt assembly subject to the requirements of S4.6.1 of Standard No. 208 (49 CFR 571.208) of this Part is not required to comply with S4.4 of this standard.

(b) In addition to the marking requirements of S4.1(j) of this standard, a Type 2 seat belt assembly that does not comply with the requirements of S4.4 of this standard shall be permanently and legibly marked or labeled with the following language:

This seat belt assembly may only be installed at a front outboard designated seating position of a vehicle with a gross vehicle weight rating of 10,000 pounds or less.

1. Chapter V, Title 49, Transportation, the Code of Federal Regulations, would be amended to add the following new Part:

PART 585—AUTOMATIC RESTRAINT PHASE-IN REPORTING REQUIREMENTS

Secs.

Authority: Secs. 103, 119 Pub. L. 89-563, 80 Stat. 718 (15 U.S.C. 1392, 1407); delegation of authority at 49 CFR 1.50 and 49 CFR 501.8.

§ 585.1 Scope.

This section establishes requirements for passenger car manufacturers to submit a report, and maintain records related to such report, concerning the number of passenger cars equipped with automatic restraints in compliance with the requirements of Standard No. 208, *Occupant Crash Protection* (49 CFR 571.208), that each manufacturer install automatic restraints in a percentage of its annual passenger car production.

§ 585.2 Purpose.

The purpose of the reporting requirements is to aid the National Highway Traffic Safety Administration in determining whether a passenger car manufacturer has complied with the requirements of Standard No. 208 of this Chapter (49 CFR 571.208) for the installation of automatic restraints in a percentage of each manufacturer's annual passenger car production.

§ 585.3 Applicability.

This part applies to manufacturers of passenger cars.

§ 585.4 Definitions.

All terms defined in section 102 of the National Traffic and Motor Vehicle Safety Act (15 U.S.C. 1391) are used in their statutory meaning.

"Passenger car" is used as defined in 49 CFR Part 571.3.

"Production year" means the 12-month period between September 1 and August 31 inclusive.

§ 585.5 Reporting requirements.

(a) *General reporting requirements.* Within 60 days after the end of each of the production years ending August 31, 1987, August 31, 1989, and August 31, 1988, each manufacturer shall submit a report to the National Highway Traffic Safety Administration concerning its compliance with the requirements of Standard No. 208 for installation of automatic restraints in its passenger cars produced in that year. Each report shall:

(1) Identify the manufacturer;

(2) State the full name, title and address of the official responsible for preparing the report;

(3) Identify the production year being reported on;

(4) Contain a statement regarding the extent to which the manufacturer has complied with the requirements of § 4.1.3 of Standard No. 208;

(5) Provide the information specified in 585.6;

(6) Be written in the English language;

(7) Be submitted to: Administrator, National Highway Traffic Safety Administration, 400 Seventh Street, S.W., Washington, D.C. 20590.

(b) *Report content.* (1) *Basis for phase-in production goals.* Each manufacturer shall provide the number of passenger cars manufactured for sale in the United States for each of the three previous production years.

(2) *Production.* Each manufacturer shall report the actual number of passenger cars equipped with automatic seat belts, the actual number of passenger cars equipped with air bags, and the actual number of passenger cars equipped with other forms of automatic restraint technology, which shall be described, for the production year being reported on, and each preceding production year, to the extent that cars produced during that year are treated under §4.1.3.4 of Standard No. 208 as having been produced during the production year being reported on.

(3) *Passenger cars produced by more than one manufacturer.* Each manufacturer whose reporting of information under (1) and/or (2) is affected by one or more of the express written contracts permitted by section § 4.1.3.5.2 of Standard No. 208 shall:

(i) Report the existence of each such contract, including the names of all parties to such contract.

(ii) Report the actual number of passenger cars covered by each such contract:

§ 585.6 Records.

Each manufacturer shall maintain records of the Vehicle Identification Number and type of automatic restraint for each passenger car for which information is reported under 585.5(b)(2), until December 31, 1991.

Issued: April 8, 1985.

Barry Felrice,

Association Administrator for Rulemaking.

[FR Doc. 85-8673 Filed 4-8-85; 3:14 pm]

BILLING CODE 4910-59-M

---

49 CFR Parts 571 and 572

[Docket No. 74-14; Notice 39]

Anthropomorphic Test Dummies

AGENCY: National Highway Traffic Safety Administration (NHTSA), DOT.

ACTION: Notice of proposed rulemaking.

SUMMARY: In response to a petition from General Motors, this notice proposes to adopt the Hybrid III test dummy as an alternative to the Part 572 test dummy in testing done in accordance with Standard No. 208, *Occupant Crash Protection.* The notice proposes to amend Part 572, *Anthropomorphic Test Dummies,* to adopt the specifications, instrumentation, test procedures and calibration requirements for the Hybrid III test dummy. The notice also proposes to amend Standard No. 208 to provide that, 45 days after publication of a final rule, manufacturers would have the option of using either the existing Part 572 test dummy or the Hybrid III test dummy. However, as of September 1, 1991, the Hybrid III would replace the Part 572 test dummy and be used as the exclusive means of determining a vehicle's conformance with the injury reduction performance requirements of Standard No. 208.

The notice further proposes to establish new injury reduction performance requirements for facial lacerations, which would go into effect on September 1, 1989, and, in response to a petition from the Center for Auto Safety, to set new injury reduction performance requirements for the neck and chest, which would go into effect 45 days after publication of a final rule. It also proposes new requirements covering the knee and tibia, which would go into effect on September 1, 1991. The proposed amendment would increase vehicle safety by permitting the use of a more advanced test dummy which is capable of more sophisticated measurements of the potential for human injury in a frontal crash.

DATES: Comments must be received by June 11, 1985. If adopted, the proposed amendments would become effective 45 days after publication of the final rule in the **Federal Register.**

ADDRESS: Comment should refer to the docket and notice number of this notice and be submitted to: Docket Section, Room 5109, National Highway Traffic Safety Administration, 400 Seventh Street, SW, Washington, D.C. 20590. (Docket Room hours are 8 a.m. to 4 p.m.)

FOR FURTHER INFORMATION CONTACT: Mr. Stanley H. Backaitis, Office of Vehicle Safety Standards, NRM-12, National Highway Traffic Safety Administration, 400 Seventh Street, SW, Washington, D.C. 20590. Telephone (202) 426-2264.

SUPPLEMENTARY INFORMATION: In December 1983, General Motors (GM) petitioned the agency to amend Part 572, *Anthropmorphic Test Dummies,* to adopt specifications for the Hybrid III test dummy. GM also petitioned for an amendment of Standard No. 208, *Occupant Crash Protection,* to allow the use of the Hybrid III as an alternative test device for compliance testing. The agency granted GM's petition on July 20,

1984. The agency subsequently received a petition from the Center for Auto Safety to propose more stringent injury criteria levels for the Hyrbrid III dummy and to establish new injury criteria so as to take advantage of the Hybrid III's superior measurement capability. The Center's petition was granted on September 17, 1984. This notice proposes amendments to Part 572 and Standard NO. 208 that are responsive to the petitioners and which, in the agency's judgment, will enhance motor vehicle safety.

GM Petition

In its petition, GM argued that the Hybrid III test dummy provides more meaningful information about the occupant protection potential of a vehicle than does the test dummy currently specified in Part 572 of the agency's regulations. GM also argued that the Hybrid III test dummy's impact responses are more respresentative of human responses. Furthermore, GM said that the Hybrid III allows the assessment of additional injury potential—31 total measurements vs. 8 for the current Part 572 test dummy. GM also claims that the repeatability and reproducibility of the Hybrid III are as good as those of the existing Part 572 test dummy and that it has acceptable durability in test applications. In support of these claims, GM has submitted numerous documents, all of which are available in Docket No. 74–14 (see 74–14 N32, Nos. 1666, 6480, 6972, 7644–54, 8423 and 8828 and 74–14 N36, No. 18).

Historical Background

In a search for better means of obtaining mechanical simulations of human responses to injury, NHTSA awarded GM a contract in 1972 for a dummy development program which was to synthesize and incorporate all of the known anthropomorphic and biomechanical data into a new dummy configuration suitable for automobile crash test applications. By the end of 1973, GM had developed the AID 502 50th percentile dummy which was subsequently thoroughly evaluated and compared against the existing Part 572 test dummy. Although incorporating numerous new design features and reflecting the up-to-date biomechanical response and anthropometry characteristics, the dummy produced neither significantly different impact responses nor more meaningful injury assessments than was possible with the existing Part 572 test dummy. Since there were no advantages in using this new dummy, the agency chose not to pursue its development any further.

GM, on the other hand, continued the development of the AID 502 dummy in the knee, chest and neck areas. It improved the biomechanical response and incorporated a number of new transducers to indicate the potential of additional injuries. The revised AID 502 dummy became known as the Hybrid III. In publicly available documents, GM has detailed the design features of the Hybrid III test dummy and its biofidelity, mostly with cadavers at the component level.

In its initial submission to the agency on March 22, 1977, GM indicated that fully belt-restrained Hybrid III test dummies in sled tests experienced higher HIC levels and somewhat higher chest and pelvis injury severity levels than were measured with the Part 572 test dummy. However, further data submitted on May 13, 1977, show virtually no differences in head and chest acceleration responses observed in sled tests with lap and shoulder belt restrained dummies seated on a hard seat fixture. Other data received in a September 19, 1977, submission show test results obtained in sled tests of restrained and unrestricted Hybrid III and Part 572 test dummies seated in one GM model car. In these instances, the Part 572 test dummy generally had higher head HIC and chest acceleration levels in the unrestrained test configuration than did the Hybrid III test dummy. In full scale barrier crash tests of two 1977 GM models, the overall Hybrid III test dummy response levels were considerably lower than in comparable sled tests. Since that time some changes have been made in the Hybrid III test dummy and considerable changes have been made in vehicles, which could make the 1977 test results of dubious value for the current test environment. NHTSA requests data and comments on current comparisons of the two test dummies in various crash configurations.

GM conducted additional tests in 1979 using lap-shoulder belted Hybrid III test dummies seated in a Volvo mounted on a test sled. (SAE report, "Correlation of Field Injuries and GM Hybrid III Dummy Response for Lap-Shoulder Belt Restraint.") This testing did not provide more definitive conclusions about the usefulness of the Hybrid III test dummy because the statistical averaging of the accident data used as inputs for that testing and the use of sleds for crash pulse simulation produced test conditions which did not replicate real world crash environments.

Since the publication of these papers, GM has increased the measurement capacity of the Hybrid III test dummy to at least 31 sensors as compared to eight for the Part 572 test dummy. Furthermore, the design of the Hybrid III test dummy has been fully documented and the drawing and specifications packages were delivered to NHTSA on January 31, 1984, and placed in the public docket. GM also assisted Humanoid Systems with financing and engineering to tool up and prepared the dummy for manufacturing. As of July 1984, approximately 40 Hybrid III test dummy dummies have been manufactured and sold by Humanoid Systems. NHTSA evaluated the production version of the Hybrid III test dummy during 1983–84 in three different sled test environments and compared the results to the performance of the Part 572 test dummy. The results of those tests are discussed in more detail later in this notice.

Need for Proposed Rulemaking

Based on its review of the available test data, the agency recognizes that the Hybrid III test dummy represents an appreciable advancement in the state-of-the-art of human simulation and that its use would be beneficial for continued improvement in vehicle safety. The Hybrid III test dummy appears to have superior biofidelity over the current Part 572 test dummy with a capability, ultimately, of monitoring almost four times as many injury producing measurements. Several measurements cover areas of the body that are not instrumented in the current Part 572 test dummy, but which are important for the development and the measurement of effectiveness of occupant protection systems. The agency therefore proposes to include the specification for the Hybrid III test dummy as Subpart E to Part 572. It would consist of the description of the dummy, its method of instrumentation, test procedure and impact responses of the various body segments.

The agency proposes that the Hybrid III test dummy be permitted for use as an alternate test device 45 days after issuance of the final rule, as long as the additional injury criteria proposed by this notice are met, and completely replace the current Part 572 test dummy by September 1, 1991. This schedule would permit vehicle manufacturers adequate time to phase in the use of the Hybrid III test dummy into the design and development of new models. Until September 1, 1991, each manufacturer would have the option of complying with the Standard No. 208 requirements using either the Part 572 test dummy or the more extensively instrumented Hybrid III test dummy.

Because the Hybrid III test dummy is capable of measuring more sources of injury than the existing Part 572 test dummy, the agency is also proposing to take advantage of that capability, as requested by the Center for Auto Safety, by setting additional injury reduction criteria for the Hybrid III test dummy to cover those body areas which show a high incidence of serious and/or disabling injuries. With the exception of the proposed facial laceration, thorax compression, and neck criteria, the newly proposed injury reduction criteria setting limits on knee shear, moments on the knee and ankle, and tibia compression loading would not go into effect until September 1, 1991, when the Hybrid III would completely replace the Part 572 test dummy. The agency is proposing an earlier effective date, 45 days after publication of the final rule for the thorax deflection and neck criteria for the Hybrid III test dummy and for the proposed neck criteria to be used in the absence of head contact with the Part 572 test dummy. (Parts of the proposed neck criteria are also a part of the agency's proposal, published elsewhere in today's **Federal Register**, proposing alternative measures to limit occupant injuries in crashes where there is no head impact.)

Similarly, the agency proposes an effective date of September 1, 1989 for the facial laceration injury criteria for both test dummies. The proposed facial laceration criteria should not generally require changes in vehicles with air bag systems or automatic belts, since the test dummy should not hit the windshield in those vehicles. However, vehicles with passive interiors would probably have to use antilacerative windshields to comply with the proposed facial laceration requirement. The antilacerative windshield technology needed to meet the facial laceration injury criteria has been developed and is currently being introduced in a limited number of passenger cars. The agency believes that the proposed September 1, 1989 effective data provides adequate leadtime for suppliers to produce sufficient quantities of the neede anti-lacerative windshields and for manufacturers to incorporate those windshields into their vehicle designs.

Changes to Standard No. 208 Specifications

Based on its review of the available test data, the agency has tentatively determined that the Hybrid III and Part 572 test dummies do not generate necessarily identical impact responses. However, when tested in lap-shoulder belts or with air cushions or under circumstances that do not allow the dummies to impact any other vehicle surfaces, the differences are minimal. Based on available data, the agency agrees with GM that there are no common transfer functions to relate the response of Hybrid III test dummy to the responses of the Part 572 test dummy. This is the case because, among other reasons, the dummies have different seating heights and seating postures and thus they will undergo different trajectories in a crash, likely contacting different components of the vehicle's interior. Due to the lack of consistent test data supporting the need to establish different injury criteria for the two dummies in areas of common measurements, and the absence of empirical data on which to base different criteria, the agency is not proposing separate injury criteria for the Hybrid III test dummy in those areas. However, as discussed elsewhere in this notice, the Hybrid III has the capability to measure additional significant injury modes as compared to the existing Part 572 test dummy, with the resulting potential to mitigate injuries to these body parts, and the agency is proposing to set new injury criteria to take advantage of the Hybrid III's additional capabilities.

Other Related Issues

The GM petition to allow alternate use of the Hybrid III dummy for compliance with Standard No. 208 requirements raises a number of questions that need to be answered. The agency is aware that the Hybrid III and the Part 572 test dummies have certain limitations. For example, neither dummy may perform well in a side impact crash. Nevertheless, we believe the Hybrid III test dummy is substantially superior as an injury assessment device over the existing Part 572 test dummy because of its capability to measure additional sources of potential injury and is the best current representation of the state-of-the-art in dummy technology. Its design is backed by extensive biomechanical data and documentation and the injury thresholds are the results of well founded synthesis of current experimental research and accident data.

The questions raised by the GM petition fall into three general categories. The agency requests comments on each of the following areas, which are discussed in detail below:

1. Technical adequacy of the Hybrid III test dummy design and its performance.
2. The proposed injury criteria.
3. Test dummy positioning procedures.

Hybrid III Design and Comparison to the Part 572 Test Dummy

Dummy Construction and Biofidelity

The materials used in the construction of the Hybrid III test dummy are nearly the same as those used for the Part 572 test dummy, except for the neck and the knees. The mass distributions between the two dummies are nearly identical. Individual segments, however, differ in design except for the abdominal insert and the pelvic bone. The Hybrid III test dummy segments in general match the anthropometric profiles of the average of the driving population somewhat closer than do those of the Part 572 test dummy. However, no one is certain to what extent relatively small differences in the contours of the dummy are important, considering that under severe impact conditions, significant local geometric distortions of the body segments of real life accident victims occur. However, better control of body symmetry and greater precision of flesh thicknesses throughout the dummy should add to the impact repeatability of the dummy. Review of available data indicates that the Hybrid III test dummy has somewhat better repeatability of impact responses at the component calibration levels, but the agency does not know whether this would also be true at higher impact speeds at which crash tests are performed.

Some segments of the Hybrid III test dummy are of unique design, e.g., the neck is composed of multilink members and incorporates capabilities to measure moments, axial tensile and compression loads, and shear forces at the head/neck interface. The thorax has a deflection sensor and the knees have ligament strain measurement capabilities which are not available on the Part 572 test dummy. Special purpose installations may be procured for the Hybrid III test dummy to measure femur and tibia bending moments and tibia compression forces.

The performance characteristics for most body segments are mostly derived from low level energy impact tests. Since the testing has been limited to low speed conditions at the component level, the agency seeks data as to whether the Hybrid III test dummy can also maintain its more human-like responses at higher speed impacts. Questions were raised in a recent University of California, San Diego study by Dennis Schneider and others ("ATD and Cadaver Head Response to Impact Loading") and referenced in the petition from the Center for Auto Safety. In that study, the Hybrid III test dummy's head showed less correlation with cadavers than did

the Part 572 test dummy in frontal impacts. Similarly, the GM study on energy absorption steering columns (Factors Influencing Laboratory Evaluation of Energy-Absorbing Steering Systems, Docket 74–14, Notice 32, Entry 1666 B) indicates that the Hybrid III test dummy's thorax may be somewhat insensitive to impact velocities, which could impair the assessment of occupant injuries. These possible differences, however, were not substantiated in full scale vehicle crash tests, the test mode in which the dummy is intended for use. The agency solicits comments and information on this issue to determine the relative importance, if any, of these concerns, especially in light of the overall improved biomechanical simulation and more extensive injury measures that the Hybrid III provides.

Temperature Sensitivity

Tests conducted by the agency ("State-of-the-Act Dummy Selection") have indicated that the Hybrid III test dummy chest impact response parameters (deflection and peak acceleration) exhibit considerable temperature sensitivity within the current temperature range (66° F to 78° F) allowed in Part 572 test dummy testing. The agency does not have any data to indicate that these sensitivities would be less in compliance testing with belts, air cushions, or passive vehicle interiors. The agency solicits information on the range of temperature controls (69° to 72° F) apparently required to attain the current repeatability levels of the Part 572 test dummy and whether that control is feasible and practicable in industrial test environments.

Seated Height

The Hybrid III test dummy has nearly a 2 inch lower seated height than the Part 572 test dummy. This difference is due to the Hybrid III test dummy's slumped posture design to simulate the "slouch" of the average seated occupant as compared to the nearly erect "military" posture of the Part 572 test dummy. The agency does not know to what extent use of the Hybrid III test dummy would affect decisions by vehicle manufacturers for the design and location of belts, windshield headers, instrument panels, steering wheel protection systems, seats, etc., and solicits comments on this issue.

Curved Lumbar Spine

The Hybrid III test dummy employs a curved lumbar spine designed to provide more realistic posture and attitude of vehicle occupants. This design appears to accommodate the use of lumbar supports in the seats of some GM cars. However, similar supports in some other makes of vehicles appear to create positioning problems for the Hybrid III test dummy in order to attain a correct posture. The agency does not know the extent of this problem and solicits information on this issue and on what steps, if any, may be needed to correct it.

Durability

Agency sled testing has indicated that the Hybrid III test dummy chest has less durability than the Part 572 test dummy, e.g., it goes out of calibration more frequently and experiences some permanent deflection set of the ribcage in 30 mph test exposures. The agency solicits information on whether this problem has been encountered in other vehicle test applications of the Hybrid III test dummy and, if it occurs, of what concern it is to dummy users.

Hybrid III Test Dummy Impact Responses

The Hybrid III test dummy impact responses are reasonably well documented and backed up by mostly cadaver based laboratory response data as well as by its extensive use by GM for the design and development of vehicles. There is however, no extensive history of accident data analysis showing how well vehicles designed using the Hybrid III test dummy are performing for real world accident victims. Recent data from the Highway Loss Data Institute, however, seem to indicate that GM cars, which according to GM have benefited from the use of the Hybrid III test dummy for development of safety improvements, have generally better injury loss experience than comparable cars of other manufacturers. Comments are sought on this issue.

Injury Criteria for Part 572 and Hybrid III

Equivalence of HIC Measurements

Some limited tests, conducted by Schneider, involving pendulum impacts of the foreheads of the two test dummies and cadavers indicate that the Hybrid III test dummy generates lower acceleration responses than either the Part 572 test dummy or cadaver heads. The reasons for the apparent differences, found in Schneider's tests, between the Hybrid III test dummy and cadaver responses in this regard have not yet been fully resolved or explained. Agency sponsored tests have measured the head impact response of the two test dummies in drop tests onto rigid plates and found that the Hybrid III's responses under these limited test conditions were lower than those of the Part 572 test dummies.

The agency believes, however, that in impacts into more pliable surfaces, such as found in vehicle interiors, the difference is minimized. This belief is based on the sled tests, cited earlier, and on a limited number of vehicle crash tests in which the Hybrid III and the Part 572 test dummies were used. Unfortunately, the existing data do not allow a precise, quantitative estimate of the difference in vehicle crash tests. In view of these uncertainties, the agency is conducting additional research on this question and requests other users of Hybrid III and Part 572 test dummies to provide information they have on differences in head impact responses between the two types of test dummies. The agency also solicits comments on the request of the Center for Auto Safety to set different head impact performance limits for the Hybrid III test dummy.

Elsewhere in today's **Federal Register**, the agency is proposing alternative methods for calculating or using the HIC. These alternatives, which would apply to the existing Part 572 test dummy and the Hybrid III test dummy, are:

1. Calculate the HIC only if head contact occurs during the crash, but substitute new injury criteria as surrogate measurements of neck injury in noncontact situations.

2. Calculate the HIC over the entire crash duration but limit the HIC time interval to a maximum of 36 milliseconds.

As discussed in that notice, the agency will adopt only one of the proposed alternatives in a final rule, if it decides to change the existing requirement. Whichever alternative is chosen would be applied to both the existing Part 572 test dummy and to the Hybrid III test dummy.

Neck

The proposed neck injury criteria for use with the Hybrid III test dummy calls for the measurement of neck bending moments and forces in the fore and aft direction and axial compression and tension loads. The availability of measurement of moments and forces in the neck will also adequately account for the inertial loads generated by the head during its free flight. Because the inertial forces of the head are transmitted and eventually dissipated through the neck,, the limits on the neck forces will also effectively control the loads that the head is exposed to in noncontact events, which may permit

the deletion of the HIC requirement for those crash conditions. The selected injury tolerances are based on the best known thresholds of injury and are in line with published technical and medical literature. The agency's 1982 SAE paper on crash priorities estimates that noncontact neck injuries in car accidents are experienced by approximately 160,000 car occupants, 56,000 in frontal collisions. The proposed injury criteria are designed to reduce the severity of, or eliminate, at least 35,000 noncontact neck injuries to occupants of passenger cars through the control of inertial forces on the head to subinjury levels at speeds below 30 mph. The agency requests comments and data on the proposed neck injury criteria.

Facial Lacerations

The present head injury reduction criterion used in Standard No. 208 does not address facial injuries, such as cuts and lacerations, due to impacts into windshields and other vehicle surfaces. The agency estimates that approximately 155,000 facial laceration injuries occur each year due to windshield impacts. While facial lacerations may not always be life threatening, they can result in serious physical and psychological injuries. Standard No. 208 has not included a facial laceration reduction criterion because it was assumed that use of air cushions or automatic belts would prevent occupants from impacting the windshied. However, as new technology, such as passive vehicle interiors, which rely on padding rather than belts or air bags, are adopted and to the extent automatic belts will be disconnected, the potential for facial laceration can be high. It is estimated that approximately 77,000 windshield related facial lacerations can be eliminated if vehicle designs will protect occupants from these types of injuries in impacts up to 30 mph. The agency is therefore proposing to add a new facial laceration reduction criterion to Standard No. 208; the criterion would not go into effect until September 1, 1989.

The facial injury reduction criterion would be based on the use of a technique used by GM with the Hybrid III test dummy. The chamois technique has also been used by Patrick and Chou in an extensive series of tests to study the lacerative effects of windshields. A two-layer chamois would be placed over the head of the dummy prior to the test. The injury reduction criterion would require the inner layer of the chamois to be completely free of any cuts or lacerations after the impact tests required by Standard No. 208.

The agency requests comments on the need for a facial injury reduction criterion and on the repeatability of the proposed test method for assessing facial injuries.

Injury Criteria for Hybrid III

Thorax

The agency believes that the current acceleration based tolerance specified with the use of the existing Part 572 test dummy is adequate to measure the injury potential of belt and air cushion protected occupants. The use of the more compliant Hybrid III test dummy necessitates additional measures such as deformation-deflection of the thorax sternum.

The agency proposes to add to the existing 60g acceleration tolerance level, a limit for compression deflection of the sternum relative to the spine when the Hybrid III test dummy is used for compliance testing; the agency proposes a three inch deflection limit for inflatable systems and a two inch limit for all others.

The agency believes that the two inch deflection limit recommended by GM is appropriate for lap-shoulder belted occupants because the geometry of the shoulder belt produces more chest compression in the area where the belt pressure is applied rather than in the area where the deflection sensor measures the displacement of the sternum. The agency, however, does not agree with GM that the 2 inch criterion should be limited only to lap-shoulder belt restrained occupants, since other systems, such as steering wheels, instrument panels and other interior protrusions, produce similar concentrated, but not necessarily centered loads which would in many instances also produce larger localized deflection than is recorded by the chest deflection sensor.

The agency agrees with GM that a three inch deflection limit is appropriate for distributed loading restraint systems, such as air bags, which usually contact the occupant's torso with symmetric loading and spread the impact forces fairly evenly over the torso area. For these reasons, the agency is proposing a three inch deflection limit only for systems symmetrically load the torso and a two inch limit for all other protection systems.

Comments and data are requested on the value and utility of the proposed supplemental deflection measure of the sternum. Since the thorax is one of the major load paths for the dissipation of the occupant impact energy, it is important that the proposed deflection measurement can adequately and properly address and interpret the dynamic interactions with a variety of vehicle surfaces. Since the sternum deflection sensor can best record the displacements when its sensitive axis is in line with the impacting surface, commenters are being asked to address the need for and utility of using additional deflection gauges to assure that potentially injurious displacement of other thorax areas are not overlooked. Data are also sought on the practicability and the consistency of the proposed measurement in the vehicle impact environment and its usefulness for the development of automatic and active restraint systems as well as steering column systems.

The agency is also aware of the apparent low sensitivity of the Hybrid III test dummy thorax response to changes in impact speeds and changes in impacted mass as reported by J.D. Horsch (Docket No. 74–14, No. 32, Entry 1666B). Horsch tested the Hybrid III test dummy and Part 572 test dummy in steering systems impacts at 14 and 22 feet per second with standard and increased steering column masses. In addition, some columns had provision for distributed loading on the thorax, while others did not. Test results indicate low and in some instances inconsequential changes in both the acceleration and deflection parameters in spite of changes in impact speeds and steering system masses. GM argues that these insensitivities are more a reflection of excellent steering column properties rather than insensitivities of the Hybrid III test dummy. However, the agency notes that such insensitivities are less apparent in Part 572 test dummies tested under the same conditions. The agency solicits comments and data on this issue.

Femurs

The agency proposes to set an injury prevention criterion for the Hybrid III test dummy which would limit femur loads to 2250 pounds, which is the same limit used for the existing Part 572 test dummy. NHTSA requests comment on the appropriateness of this value.

Knee and Tibia

The agency proposes adding the GM developed knee shear and tibia bending and compression fracture criteria when the Hybrid III dummy is used as the exclusive Standard No. 208 compliance test device beginning on September 1, 1991. The knee shear criterion limits translation of the tibia relative to the femur to not more than 0.6 in. The proposed tibia criteria limit the compression forces to 1800 lbs and

establish limits on injuries due to combined bending moments and compression forces. They are described in more detail below.

Knee/tibia tolerances are important because of the anticipated increased use of knee restraints. The knee restraint is used to dissipate the impact energy of the lower portion of an occupant body and limbs when the occupant's knees and/or tibias impact the knee restraint. Testing by GM has shown that the orientation, size and impact characteristics of a knee bolster are crucial for minimizing knee joint and tibia-fibula injury in an impact. A wide variability in car occupants' statures and seating postures means that the knee bolster could load the flexed leg either through the knee (acting directly through the femur) or through the tibia (acting through the knee joint). Potential injuries associated with these types of impacts could vary considerably and those associated with tibia impacts can result in either tibia/fibula fractures and/or knee joint ligament tears.

The lower extremity injuries of passenger car occupants in frontal collisions, reported by the agency in the report "A Search for Priorities in Crash Protection", amount to approximately 3.1% of all crash-related harm, which translates into approximately 79,000 injured persons annually. Approximately 16,000 of those persons incur serious injuries (AIS 3 and above). It is not known at the present time how many of these are made up of femur fractures, tibia fractures and/or knee shear injuries. Most of the injuries (except for amputation) are of low risk to life, but in many instances are associated with relatively longer term impairment and pain than other body areas injured at comparable severity levels. The introduction of knee restraints into vehicle design and the intention to contain the lower part of the occupant's body through knee and tibia impacts has the potential of increasing the number and the severity of lower leg injuries by a considerable amount unless the knee bolster is specifically designed to prevent these injuries.

The agency believes that the knee joint shear criterion (displacement of the tibia relative to the femur can not exceed 0.6 inch) developed and used by GM is in line with published research. The proposed displacement limit is intended to prevent tears of critical ligaments and also avoid injuries leading to future debilitation of the knee joint. The GM developed injury threshold, limiting the compression forces to 900 pounds on each side of the tibia clevis at the knee also in line with the published research.

The agency also proposes to adopt the GM-developed injury threshold index for tibia compression-bending which is computed from the following expression:

$$\frac{M}{M_c} + \frac{P}{P_c} < 1$$

where $M_c = 168$ lbs-ft and $P_c = 7{,}950$ lbs and M and P are actually measured moments and compression forces respectively. If the sum of the ratio of the bending moments either at the knee or at the ankle end of the tibia and the compression force does exceed the value of 1, fractures of the tibia and fibula shafts of the lower legs are unlikely to occur.

The higher average crash accelerations of small cars, the use of knee cushions to control the deceleration of the lower torso part of the occupant, and the potential entrapment of the lower legs by the intrusion of the floor board pose a significant potential for lower leg injuries in frontal crashes. For this reason, the agency believes that the inclusion of the compression/bending moment criterion into FMVSS 208 injury requirements is needed if tibia and ankle fractures are to be prevented.

The proposed tibia-knee injury assessment methodology is relatively new and to the best of our knowledge has not been employed by anyone else outside of GM. Comments and data are solicited on the need and value of the measurements for the control of knee pad designs and on the practicability of the proposed measurement package. In view of the substantial set of tibia measurements proposed (14 total), commenters are asked to review their usefulness for predicting the injury potential and to provide views and data on the possible consolidation, or simplification of the criteria. Data are also solicited on the repeatability of the Hybrid III leg injury measurements.

Hybrid III Positioning Procedure

Based on the differences in the anthropomorphic characteristics of the Hybrid III and Part 572 test dummies, the agency is proposing to set different test dummy positioning procedures for the Hybrid III test dummy. The proposed changes affect the positioning of the pelvic bone, upper torso and head to ensure a consistent and realistic posture for the Hybrid III.

The proposed test procedure is based upon the positioning procedure developed by GM. The major change from the GM procedure is that the GM procedure provides that the test dummy's H-Point is positioned in reference to the seating reference point specified in the manufacturer's design drawing for that vehicle. The agency has found in its own testing that the Hybrid III test dummy can be more easily installed and adjusted by using a modified procedure. Under the proposed procedure the dummy would initially be placed in the vehicle seat set at its mid-track position, as required by Standard No. 208, and the location of the H-point of the seated dummy determined. After all of the remaining positioning requirements have been met, the H-point location of the test dummy would be remeasured and adjusted so that it is within ±0.2 inch of its original position. Based on the limited testing the agency has done with the Hybrid III test dummy, we believe that the proposed positioning procedure will be easy to use and produce repeatable results. The agency is particularly interested in learning of positioning procedures followed by other Hybrid III users which would promote the repeatability of the test results.

Impact Analyses

NHTSA has examined the effect of this rulemaking action and determined that it is not major within the meaning of Executive Order 12291 or significant within the meaning of the Department of Transportation's regulatory policies and procedures. The agency has also determined that the economic and other effects of this rulemaking action are minimal. A regulatory evaluation describing those effects has been placed in the docket.

The availability and use of advanced technology and tools such as the Hybrid III test dummy for the evaluation of effectiveness and integrity of occupant protection systems by vehicle manufacturers will assist in screening out vehicle environments that might be either marginal or not appropriate for occupant protection, but not assessable with the current technology Furthermore, the ability of the Hybrid III test dummy to monitor the potential of many more modes of injuries to the occupant may accelerate the introduction of further innovations for occupant protection by other vehicle manufacturers.

The basic Hybrid III test dummy is estimated to cost approximately $19,000, or $7,000 more than the equivalent Part 572 test dummy. The addition of neck transducers, the thorax deflection gauge, knee shear and tibia force and bending moment sensors will increase the cost

per dummy by an additional $24,000. For an assumed average of at least 10 dummies per vehicle manufacturer, the total cost increment per manufacturer may amount to approximately $310,000. Assuming the average dummy is capable of approximately 30 test applications, the total estimated cost increment per dummy test would be approximately $1000 for each manufacturer. The incremental cost of dummy verification and calibration would be approximately $1000 per test. In addition, the need to monitor twenty additional data channels (three neck, one thorax, two knees and 14 tibia and the use of the facial laceration measurement) would add approximately $1050/per dummy, thus raising the total increment per dummy per test application to approximately $3050. Assuming a total of 300 dummy applications per year per larger manufacturer, it is estimated that on the average the incremental cost to each larger manufacturer may be around $915,000. When amortized over production, incremental cost may be around $0.40 per vehicle or less, depending on the number of vehicle models a vehicle manufacturer may have under development.

NHTSA has also considered the effects of this rulemaking action under the Regulatory Flexibility Act and I hereby certify that it will not have a significant economic effect on a substantial number of small entities. The proposed changes affect motor vehicle manufacturers, none of which is a small business entity. The effect on small organization and governmental units would not be significant. The minimal, if any, price increase associated with this rulemaking should not affect the purchasing of new cars by these entities.

Potential Environmental Impact

NHTSA has analyzed this rulemaking action for the purposes of the National Environmental Policy Act. The agency has determined that implementation of this action will not have any significant impact on the quality of the human environment.

The Hybrid III test dummy is made of nearly identical materials as the Part 572 test dummy. The change to the Hybrid III test dummy will have no effects on the environment.

Submission of Comments

Interested persons are invited to submit comments on the proposal. It is requested but not required that 10 copies be submitted.

All comments must be limited not to exceed 15 pages in length. (49 CFR 553.21) Necessary attachments may be appended to those submissions without regard to the 15-page limit. This limitation is intended to encourage commenters to detail their primary arguments in a concise fashion.

If a commenter wishes to submit certain information under a claim of confidentiality, three copies of the complete submission, including purportedly confidential information, should be submitted to the Chief Counsel, NHTSA, at the street address given above, and seven copies from which the purportedly confidential information has been deleted should be submitted to the Docket Section. A request for confidentiality should be accompanied by a cover letter setting for the information specified in the agency's confidential business information regulation (49 CFR Part 512).

All comments received before the close of business on the comment closing date indicated above will be considered, and will be available for examination in the docket at the above address both before and after that date. To the extent possible, comments filed after the closing date will also be considered. However, the rulemaking action may proceed at any time after that date, and comments received after the closing date and too late for consideration in regard to the action will be treated as suggestions for future rulemaking. The NHTSA continue to file relevant material as it becomes available in the docket after the closing date, and it is recommended that interested persons continue to examine the docket for new material.

Those persons desiring to be notified upon receipt of their comments in the rule docket should enclose, in the envelope with their comments, a self-addressed stamped postcard. Upon receiving the comments, the docket supervisor will return the postcard by mail.

List of Subjects

49 CFR Part 571

Imports, Motor vehicle safety, Motor vehicles, Reporting and recordkeeping requirements, Rubber and rubber products, Tires.

49 CFR Part 572

Motor vehicle safety.

In consideration of the foregoing, Part 572, *Anthropomorphic Test Dummies*, and Part 571.208, *Occupant Crash Protection*, of Title 49 of the Code of Federal Regulations would be amended as follows:

PART 572—[AMENDED]

1. A new Subpart E would be added to Part 572 to read as follows:

Subpart E—Hybrid III Test Dummy

§ 572.30 General description.

(a) The dummy consists of components and assemblies specified in the Anthropomorphic Test Dummy Part List identified by GM drawing No. 78051-218, revision I, and of subordinate drawings listed in the parts list consisting of 13 pages with the issuance date of 9/15/83 under the title "Model H-III." The dummy is made up of the following component assemblies:

Revision

78051-61 Head Assembly—Complete—(H)
78051-90 Neck Assembly—Complete—(A)
78051-89 Upper Thorax Assembly—Complete—(G)
78051-70 Lower Torso Assembly—Complete—(G)
78051-56 Leg Assembly—Complete (LH)—(D)
78051-57 Leg Assembly—Complete (RH)—(D)
78051-123 Arm Assembly—Complete (LH)—(D)
78051-124 Arm Assembly—Complete (RH)—(D)

The drawings and specifications contained in this parts list are included herein by reference and are available for examination in docket 74-14, Room 5108, 400 Seventh Street, S.W. Washington D.C. Copies may be obtained through Keuffel and Esser Company, 1521 North Danville Street, Arlington, VA 22201.

(b) Adjacent segments are joined in a manner such that throughout the range of motion and also under crash-impact conditions, there is no contact between metallic elements except for contacts that exists under static conditions.

(c) The weights, inertial properties and centers of gravity location of component assemblies shall conform to those listed in drawing 78051-338.

(d) The structural properties of the dummy are such that the dummy conforms to this part in every respect both before and after being used in vehicle tests specified in Standard No. 208 of this Chapter (§ 571.208).

§ 572.31 Head.

(a) The head consists of the assembly shown in drawing 78051-61 and conforms to each of the drawings subtended therein.

(b) When the head (78051-61) with neck transducer structural replacement (78051-383) is dropped from a height of 14.8 inches in accordance with paragraph (c) of this section, the peak

resultant accelerations at the location of the accelerometers mounted in the head form in accordance with 572.35(c) shall be not less than 225g, and not more than 275g. The acceleration/time curve for the test shall be unimodal to the extent that oscillations occurring after the main acceleration pulse are less than ten percent (zero to peak) of the main pulse. The lateral acceleration vector shall not exceed 15g (zero to peak).

(c) *Test Procedure.* (1) Soak the test material in a test environment at any temperature between 66°F to 78°F and at a relative humidity from 10% to 70% for a period of at least four hours prior to its application in a test.

(2) Clean the head's skin surface and the surface of the impact plate with 1,1,1 Trichloroethane or equivalent.

(3) Suspend the head, as shown in Figure 19, so that the lowest point on the forehead is 0.5 inches below the lowest point on the dummy's nose when the midsagittal plane is vertical.

(4) Drop the head from the specified height by means that ensure instant release onto a rigidly supported flat horizontal steel plate, 2 inches thick and 2 feet square, which has a clean, dry surface and any microfinish of not less than 8 microinches (rms) and not more than 80 microinches (rms).

(5) Allow a time period of at least 2 hours between successive tests on the same head.

FIGURE 19

TEST SET-UP FOR HEAD IMPACT RESPONSE

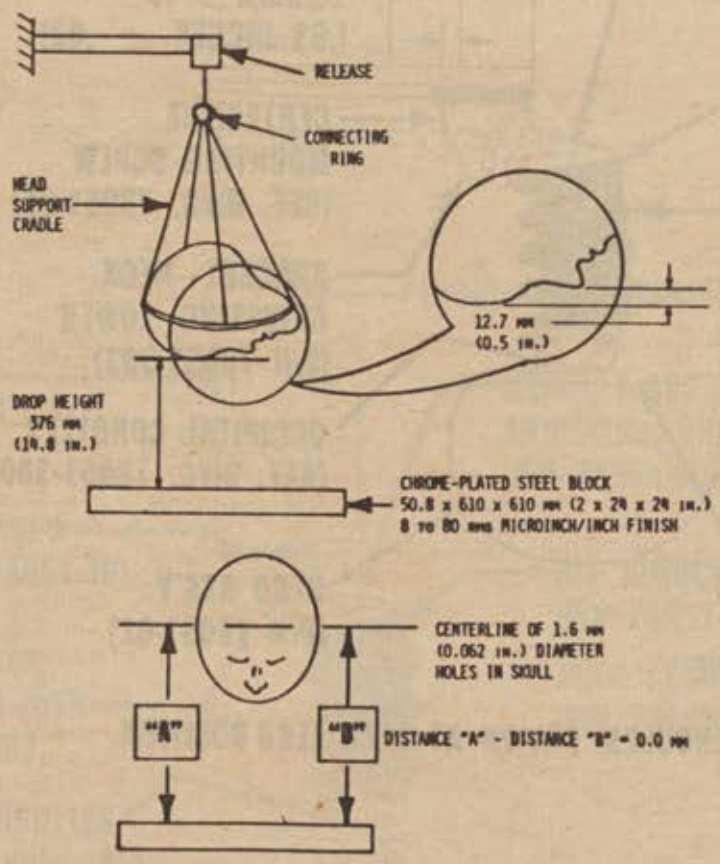

NOTE: TOLERANCE ON TEST SETUP DIMENSIONS ±1 MM (0.04 IN.)

§ 572.32 Neck.

(a) The neck consists of the assembly shown in drawing 78051-90 and conforms to each of the drawings subtended therein.

(b) When the neck and head assembly, consisting of parts 78051-61, -98, -307, -303, -84, -305, -90, -306, -96, is tested in accordance with paragraph (c) of this section, it shall have the following characteristics:

(1) *Flexion.* (i) Plane D, referenced in test setup of Figure 20, shall rotate, when tested in accordance with procedures specified in paragraph (c) of this section, between 67° to 79° and between 54 milliseconds (ms) and 64 ms from time zero. In first rebound, the rotation of plane D shall cross 0 deg. between 109 ms and 119 ms.

(ii) The moment measured by the neck transducer (78051-300) about the occipital condyles, referenced in test set up of Figure 20 and in conformance with 572.35(d), shall have a minimum value of −15 lbs-ft to −22 lbs-ft occurring between 12 ms and 16 ms from time zero, a maximum value between 72 lbs-ft and 90 lbs-ft occurring between 46 ms, and 56 ms, and the positive moment shall decay for the first time to 0 lb-ft between 95 ms and 105 ms.

(2) *Extension.* (i) Plane D, referenced in test set up of Figure 21, shall rotate, when tested in accordance with the procedure specified in paragraph (c) of this section, between 94° and 106° and between 72 and 82 ms from time zero. In first rebound, the rotation of plane D shall cross 0° between 157 ms and 167 ms.

BILLING CODE 4910-59-M

FIGURE 20

TEST SET-UP FOR NECK FLEXION

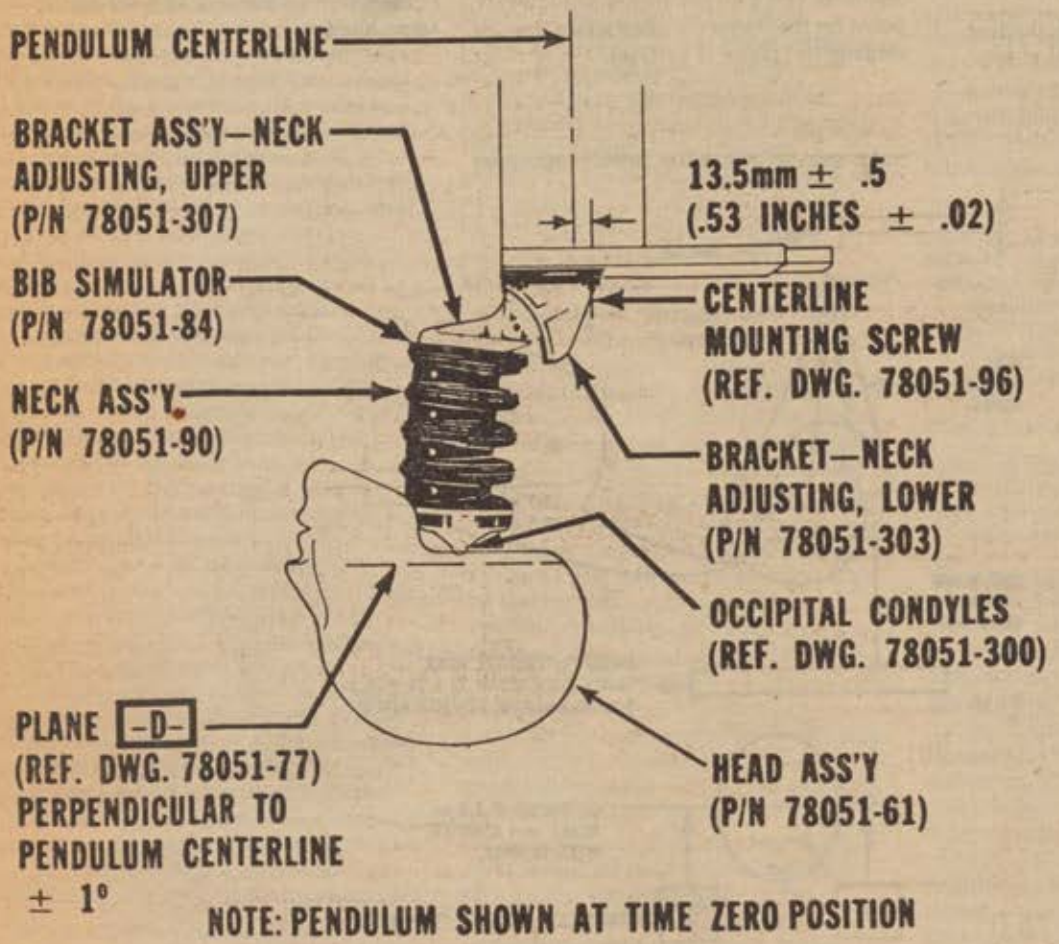

BILLING CODE 4910-59-C

(ii) The moment measured by the neck transducer (78051-300) about the occipital condyles, referenced in the test set up of Figure 21, and in conformance with S572.35, shall have a maximum value between 12 lbs-ft to 18 lbs-ft occurring between 12 ms and 18 ms from time zero and a minimum value between −52 lbs-ft and −63 lbs-ft occurring between 69 ms and 77 ms.

(3) Time zero is defined as the time of contact between the pendulum striker plate and the aluminum honeycomb material.

(c) *Test procedure.* (1) Soak the test material in a test environment at any temperature between 66 °F to 78 °F and at a relative humidity from 10% to 70% for a period of at least four hours prior to its application in a test.

(2) Torque jamnut (78051-64) on neck cable (78051-301) to 1.5 lbs-ft±.2 lbs-ft.

(3) Mount the head-neck assembly, defined in paragraph (b) of this section, on a rigid pendulum as specified in Figure 22 so that the head's midsagittal plane is vertical and coincides with the plane of motion of the pendulum's longitudinal axis.

(4) Release the pendulum and allow it to fall freely from a height such that the tangential velocity at the pendulum accelerometer centerline is 23.6 ft/sec±2.0 ft/sec. for flexion testing and 19.7 ft/sec±1.6 ft/sec. for extension testing with the pendulum deceleration vs. time pulse conforming to the following characteristics:

Time (ms)	Flexion deceleration level (g)
10	22.50-27.50
20	17.60-22.60
30	12.75-17.75
Any other time	29 maximum

BILLING CODE 4910-59-M

FIGURE 21

TEST SET-UP FOR NECK EXTENSION

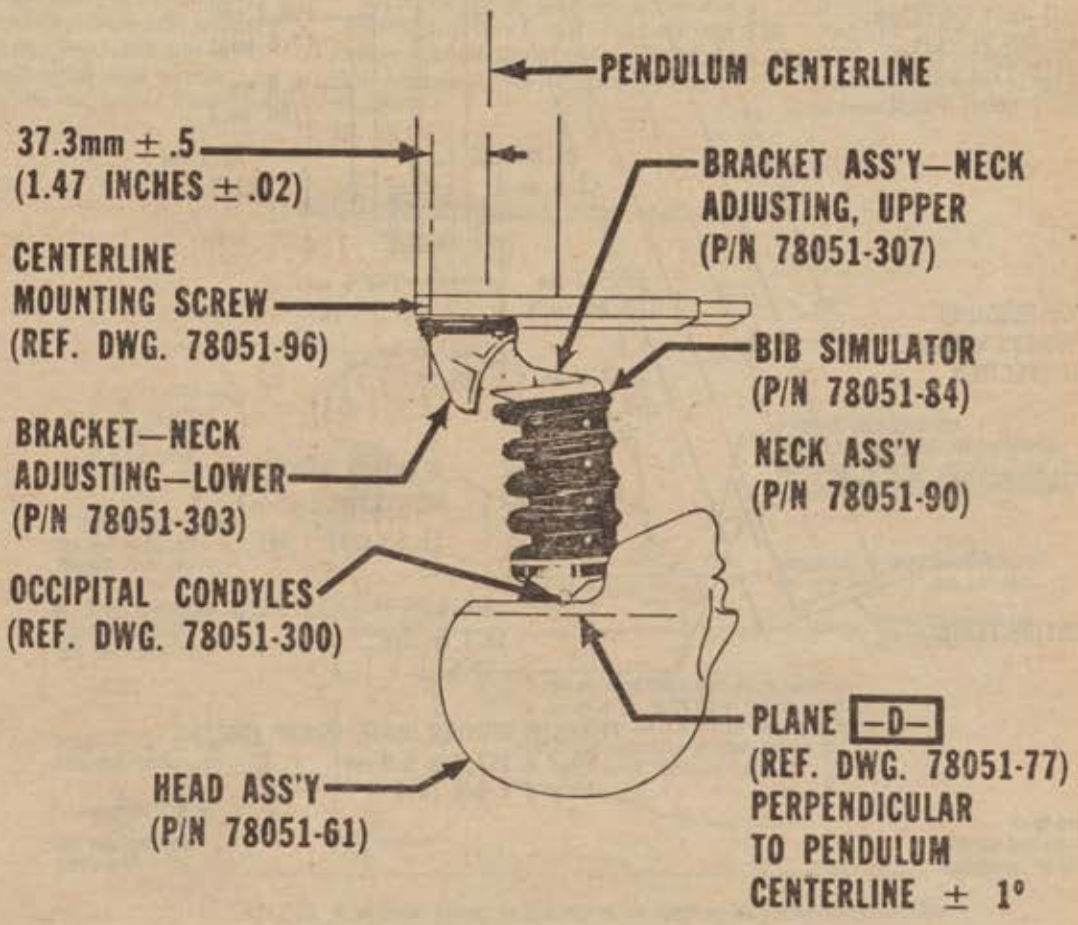

NOTE: PENDULUM SHOWN AT TIME ZERO POSITION

FIGURE 22

PENDULUM SPECIFICATIONS FOR NECK TESTING

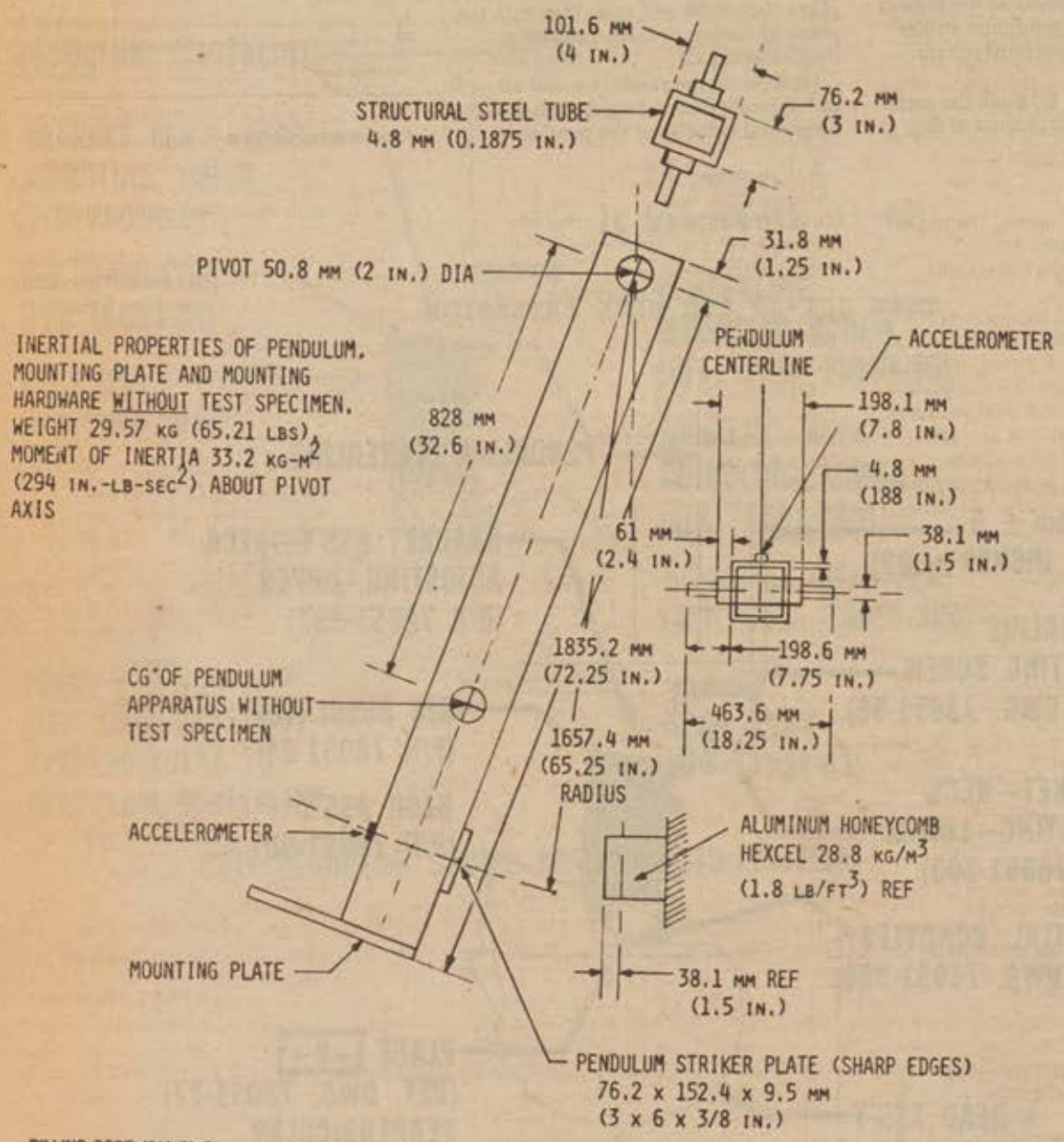

BILLING CODE 4910-59-C

The decaying deceleration-time curve shall first cross 5g between 34 ms and 42 ms.

Time (ms)	Extension deceleration level (g)
10	17.20-21.20
20	14.20-18.20
30	11.00-15.00
Any other time	22 maximum

The decaying deceleration-time curve shall cross 5g between 38 ms and 46 ms.

(5) Allow the neck to flex without impact of the head or neck with any object other than the pendulum.

§ 572.33 Thorax.

(a) The thorax consists of the upper torso assembly in 78051-89 and conforms to each of the drawings subtended.

(b) When impacted by a test probe conforming to S572.35 at 14 fps and 22 fps in accordance with paragraph (c) of this section, the thorax of a complete dummy assembly (78051-281) with left and right shoes (78051-294 and -295) removed, shall resist with forces measured by the test probe from time zero and sternum displacement measured relative to spine as follows:

Impact velocity (fps)	Time (ms)	Sternum displacement (in)	(ms)	Time thorax load (lbs)
14	25	2.63±.12	19	1242±56
22	25	1.48±.12	19	814±56

The internal hysteresis in each impact shall be more than 75% but less than 80%. The forces measured are a product of pendulum mass and deceleration. Time zero is defined as the time of contact between the upper thorax and pendulum face.

(c) *Test procedure.* (1) Soak the test dummy for at least four hours in an environment at a temperature of between 69° F and 72° F and at a relative humidity from 10% to 70%.

(2) Seat the dummy without back support on a surface as specified in S572.35 and in the orientation as shown in Figure 23.

(3) Place the longitudinal centerline of the test probe so that it is .5±.04 in. below the horizontal centerline of the No. 3 Rib (ref. 78051-32) as shown in Figure 23.

(4) Align the test probe specified in S572.35 so that at impact its longitudinal centerline coincides within .5° of a horizontal line in the dummy's midsagittal plane.

(5) Impact the thorax with the test probe so that its longitudinal centerline falls within 2° of a horizontal line in the dummy' midsagittal plane at the moment of impact.

(6) Guide the probe during impact so that it moves with no significant lateral, vertical, or rotational movement.

(7) Measure the horizontal deflection of the sternum relative to the thoracic spine along the line established by the longitudinal centerline of the probe at the moment of impact, using a petentiometer mounted inside the sternum.

(8) Measure hysteresis by determining the ratio of the area between the loading and unloading portions of the force deflection curve to the area under the loading portion of the curve.

§ 572.34 Limbs.

(a) The limbs consist of assemblies 78051-56 and -57 and 78051-123 and - 124 and conform to the drawings subtended.

FIGURE 23

TEST SET-UP FOR THORAX IMPACT RESPONSE

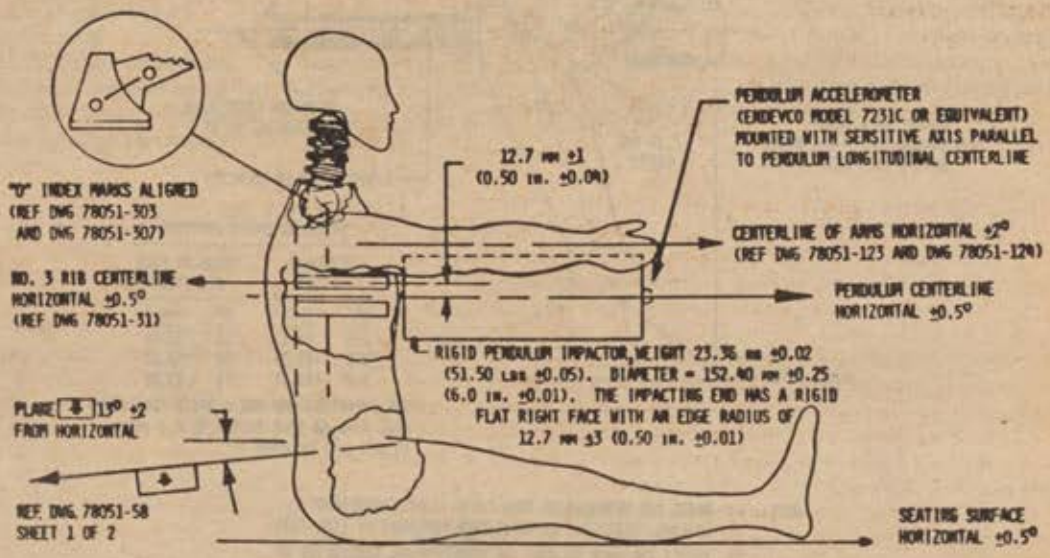

NOTE: A) NO EXTERNAL SUPPORT IS REQUIRED ON THE DUMMY TO MEET SETUP SPECIFICATIONS

B) THE MIDSAGITTAL PLANE OF THE DUMMY IS VERTICAL (±1°) AND WITHIN 2° OF THE CENTERLINE OF THE PENDULUM

C) THE MIDSAGITTAL PLANE OF THE DUMMY IS CENTERED ON THE CENTERLINE OF THE PENDULUM WITHIN 3 MM (0.12 IN.)

D) GUIDE THE PENDULUM SO THERE IS NO SIGNIFICANT LATERAL, VERTICAL OR ROTATIONAL MOVEMENT AT TIME ZERO

(b) When each knee of the leg assemblies defined in paragraph (c) of this section are impacted by a pendulum defined in S572.35 in accordance with paragraph (c) of this section at 6.9 ft/sec. ± .05 ft/sec., the peak knee impact force, which is a product of pendulum mass and acceleration, shall have the following values:

Pendulum weight (pounds)	Peak knee impact force (pounds)	
	Minimum	Maximum
1.1 ± .02	157	269
3.3 ± .06	407	717
11.0 ± .20	998	1566

(c) *Test Procedure.* (1) The test material consists of leg assemblies (78051–56) left and (–57) right with upper leg assemblies (78051–46) left and (78051–47) right removed. The load cell simulator (78051–319) is used to secure the knee cap assemblies (78051–71) left and (78051–72) right as shown in Figure 6.

(2) Soak the test material in a test environment at any temperature between 66 °F to 78 °F and at a relative humidity from 10% to 70% for a period of at least four hours prior to its application in a test.

(3) Mount the test material to set up conditions shown in Figure 24 with no contact permitted between the foot and any other exterior surfaces.

(4) Place the longitudinal centerline of the test probe so that at contact with the knee it is parallel and colinear within 2 degrees with the centerline of the femur load cell simulator.

(5) Guide the pendulum so that there is no significant lateral, vertical or rotational movement at time zero.

FIGURE 24

TEST SET-UP FOR FEMUR IMPACT RESPONSE

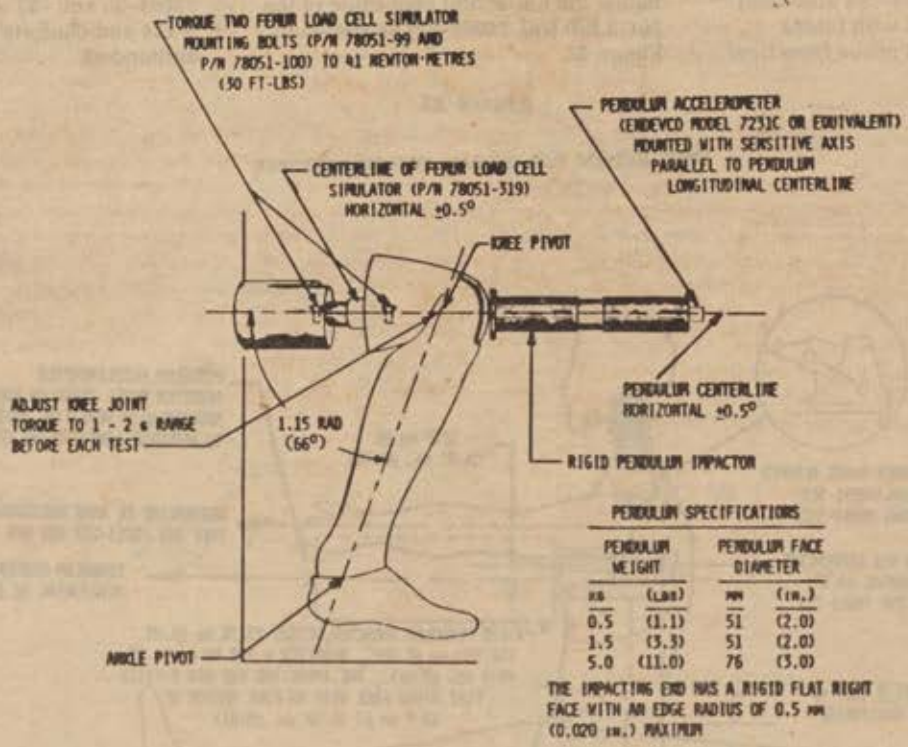

PENDULUM SPECIFICATIONS

PENDULUM WEIGHT		PENDULUM FACE DIAMETER	
kg	(LBS)	mm	(in.)
0.5	(1.1)	51	(2.0)
1.5	(3.3)	51	(2.0)
5.0	(11.0)	76	(3.0)

THE IMPACTING END HAS A RIGID FLAT RIGHT FACE WITH AN EDGE RADIUS OF 0.5 mm (0.020 in.) MAXIMUM

NOTE: A) GUIDE THE PENDULUM SO THAT THERE IS NO SIGNIFICANT LATERAL, VERTICAL, OR ROTATIONAL MOVEMENT AT TIME ZERO

B) IMPACT THE KNEE SO THAT THE LONGITUDINAL CENTERLINE OF THE PENDULUM FALLS WITHIN TWO DEGREES OF A HORIZONTAL LINE PARALLEL TO THE FEMUR LOADCELL SIMULATOR AT TIME ZERO

(6) Impact the knee with the test probe so that its longitudinal centerline falls within .5 degrees of a horizontal line parallel to the femur load cell simulator at time zero.

(7) Time zero is defined as the time of contact between the test probe and the knee.

§ 572.35 Test conditions and instrumentation.

(a) The test probe used for thoracic impact tests is a cylinder 6 inches in diameter that weighs 51.5 pounds including instrumentation. Its impacting end has a flat right face that is rigid and that has an edge radius of 0.5 inches. Test probe has an accelerometer mounted on the end opposite from impact with its sensitive axis parallel and colinear to the longitudinal centerline of the cylinder.

(b) The test probe used for impact tests is a cylinder with a rigid flat right face perpendicular to its longitudinal axis for striking as defined in the table below.

Pendulum weight (lbs) (pounds)	Pendulum face diameter (inches)	Edge radius (inches)
1.1	2.0	.02
3.3	2.0	.02
11.0	3.0	.02

The test probe has an accelerometer mounted on the end opposite from impact with its sensitive axis parallel and colinear to the longitudinal centerline of the cylinder.

(c) Head accelerometers shall have dimensions and characteristics specified in drawing 78051-136 or equivalent and be mounted in the head as shown on 78051-61 and in the assembly shown in drawing 78051-218.

(d) The neck transducer shall have dimensions and characteristics specified in drawing 78031-300 and be mounted for testing as shown in 70951-63 and in the assembly shown in drawing 78051-218.

(e) The chest accelerometers shall have dimensions and characteristics specified in drawing in 78051-136 or equivalent and be mounted as shown with adaptor assembly 78051-116 for assembly into 78051-218.

(f) The chest deflection transducer shall have dimensions and characteristics specified in drawing 78051-342 or equivalent and be mounted in the chest deflection transducer assembly 87051-317 for assembly into 87051-218.

(g) The thorax and femur impactor transducers shall have dimensions and characteristics of Endevco 7231 or equivalent and be mounted with its sensitive axis parallel to the pendulum's longitudinal centerline.

(h) The femur load cell shall have dimensions and characteristics specified in drawing 78051-265 or equivalent and be mounted in assemblies 78051-46 and -47 for assembly into 78051-218.

(i) The knee slider transducer shall have dimensional and response characteristics specified in 83-5002-01 and be mounted into 79051-16 for assembly into 78051-218.

(j) The tibia and knee clevis and ankle clevis transducers shall be as specified in drawings 83-5003-005, 83-5003-001-002, -005, and 83-5005-001 having response characteristics specified in drawing 83-5003-005 for mounting in 78051-56 and -57 and for assembly into 78051-218.

(k) The outputs of acceleration and force-sensing devices installed in the dummy and in the test apparatus specified by this part are recorded in individual data channels that conform to the requirements of SAF Recommended Practice J211a, December 1971, with channel classes as follows:

(1) Head acceleration—Class 1000.

(2) Neck force—Class 60.

(3) Thorax acceleration—Class 180.

(4) Thorax deflection—Class 180.

(5) Fermur force—Class 600.

(6) Tibia force and bending moments—Class 600.

(l) Coordinate signs for instrumentation polarity conform to the sign convention shown in Figures 25 and 26.

(m) The mountings for sensing devices have no resonance frequency within a range of 3 times the frequency range of the applicable channel class.

(n) Limb joints are set at 1g, barely restraining the weight of the limb when it is extended horizontally. The force required to move a limb segment does not exceed 2g throughout the range of limb motion.

(o) Performance tests are conducted, unless otherwise noted, at any temperature from 69 °F to 72 °F and at any relative humidity from 10 percent to 70 percent after exposure of the dummy to these conditions for a period of not less then 4 hours.

(p) Performance tests of the same component, segment, assembly, or fully assembled dummy are separated in time by a period of not less than 30 minutes unless otherwise noted.

(q) Surfaces of dummy components are not painted except as specified in this part or in drawings subtended by this part.

BILLING CODE 4910-59-M

FIGURE 25 - COORDINATE SIGN CONVENTIONS

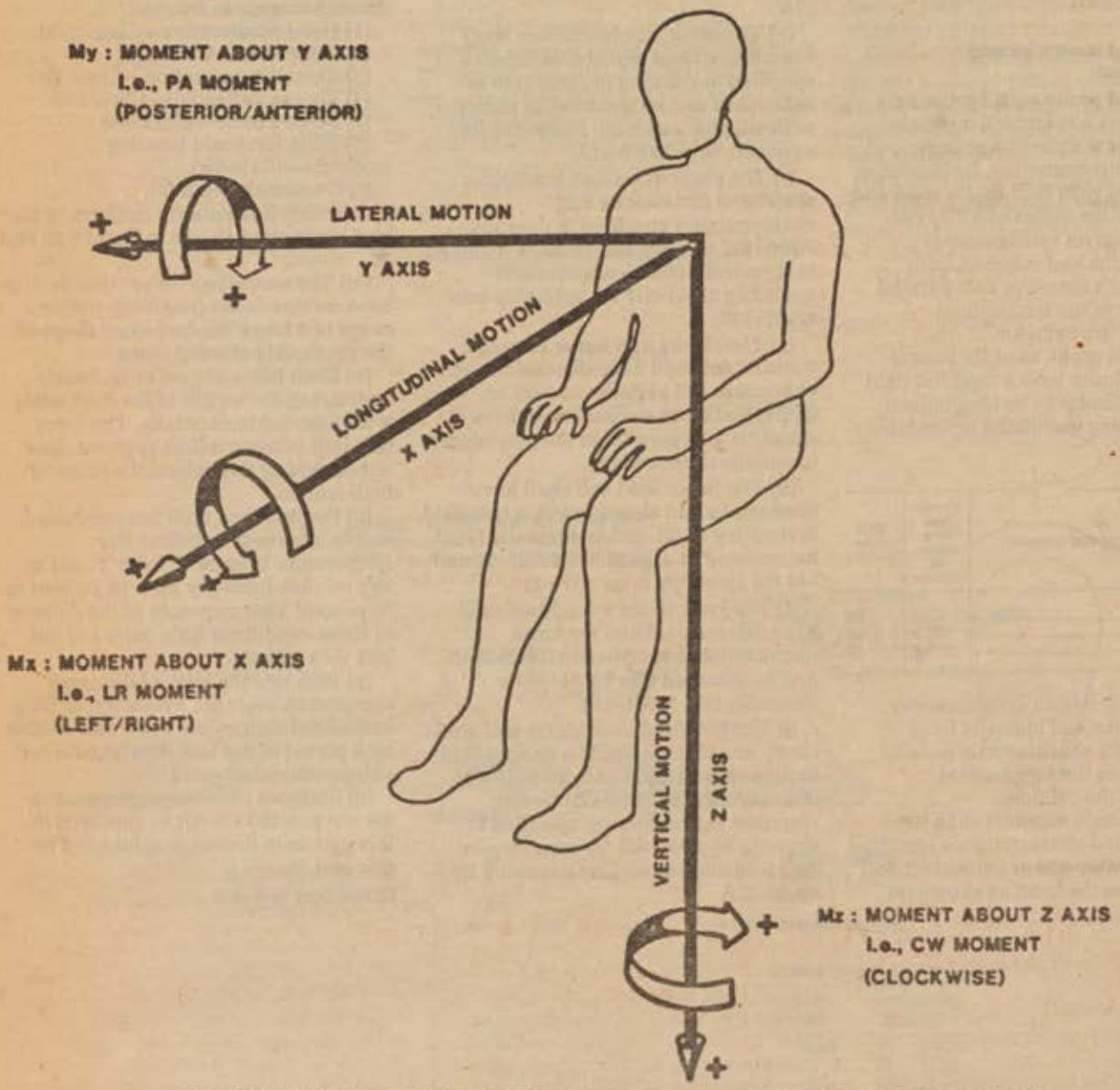

(RIGHT HAND RULE RELATES MOMENT POLARITY TO ITS AXIS POLARITY)

ANY PHYSICAL EVENT IN THE DIRECTION
OF ARROWS IS TO BE CONSIDERED POSITIVE

FIGURE 26 - HYBRID III NECK LOAD SIGN CONVENTION

AXIS NO.	DESIG.	MEASUREMENT	OUTPUT POLARITY	CONNECTOR LABELING
1	Fx	PUSH REAR TO FRONT	POSITIVE	AXIS 1 LONG SHEAR
2	Fy	PUSH LEFT TO RIGHT	POSITIVE	AXIS 2 LAT SHEAR
3	Fz	PUSH DOWNWARD	POSITIVE	AXIS 3 VERT LOAD
4	Mx	BEND LEFT TO RIGHT	POSITIVE	AXIS 4 LR MOMENT
5	My	BEND FRONT TO REAR (EXTENSION)	POSITIVE	AXIS 5 AP MOMENT
6	Mz	TWIST CLOCKWISE	POSITIVE	AXIS 6 CW MOMENT

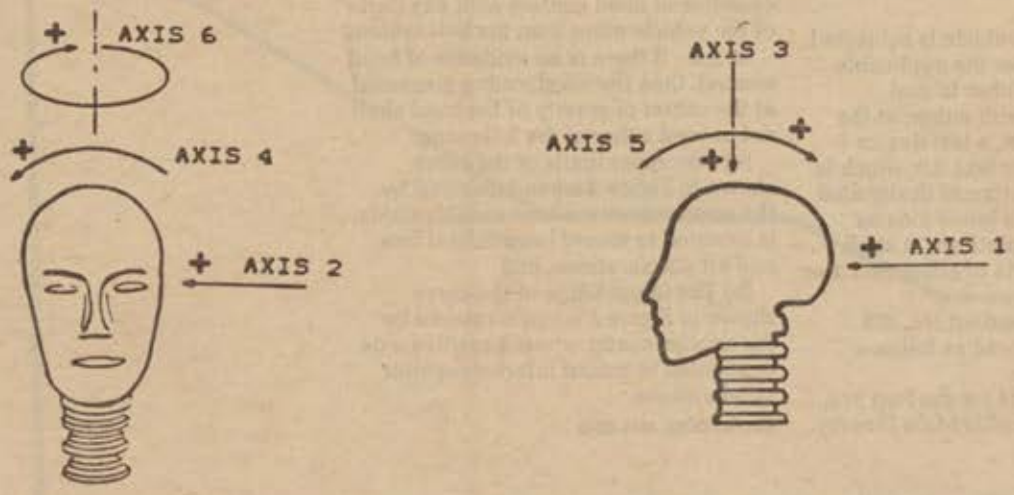

PART 571—[AMENDED]

2. Section S5 of Standard No. 208 (49 CFR 571.208) would be amended by revising S5.1 to read as follows:

§ 571.208 [Amended]

S5. Occupant crash protection requirements.

S5.1 Vehicles manufactured before September 1, 1989, shall comply with either, at the manufacturer's option, 5.1 (a)(1) or (b)(1). Vehicles manufactured on or after September 1, 1989, shall comply with 5.1 (a)(2) or 5.1(b)(2). Vehicles manufactured on or after September 1, 1991, shall comply with 5.1(b)(3).

(a) Impact a vehicle traveling longitudinally forward at any speed, up to and including 30 mph, into a fixed collision barrier that is perpendicular to the line of travel of the vehicle, or at any angle up to 30° in either direction from the perpendicular to the line of travel of the vehicle under the applicable conditions of S8.

(1) For vehicles manufactured before September 1, 1989, the anthropomorphic test devices specified in S8.1.8.1 placed at each front outboard designated seating position shall meet the injury criteria of S6.1.1, 6.1.2, 6.1.3, and 6.1.4.

(2) For vehicles manufactured on or after September 1, 1989, the anthropomorphic test devices specified in S8.1.8.1 placed at each front outboard designated seating position shall meet the injury criteria of S6.1.1, 6.1.2, 6.1.3, 6.1.4 and 6.1.5.

(b) Impact a vehicle traveling longitudinally forward at any speed, up to and including 30 mph, into a fixed collision barrier that is perpendicular to the line of travel of the vehicle, or at any angle up to 30° in either direction from the perpendicular to the line of travel of the vehicle, under the applicable conditions of S8.

(1) For Vehicles manufactured before September 1, 1989, the anthropomorphic test devices specified in S8.1.8.2 placed at each front outboard designated seating position shall meet the injury criteria of S6.2.1, 6.2.2, 6.2.3, 6.2.4, 6.2.5, 6.2.6, 6.2.7, 6.2.8, and 6.2.9.

(2) For vehicles manufactured on or after September 1, 1989, the anthropomorphic test devices specified in S8.1.8.2 placed at each front outboard designated seating position shall meet the injury criteria of S6.2.1, 6.2.2, 6.2.3, 6.2.4, 6.2.5, 6.2.6, 6.2.7, 6.2.8, 6.2.9, and 6.2.10.

(3) For vehicles manufactured on or after Spetember 1, 1991, the anthropomorphic test devices specified in S8.1.8.2 placed at each front outboard designated seating position shall meet all of the injury criteria of S6.2.

3. Section S5.2 of Standard No. 208 would be revised to read as follows:

S5.2 *Lateral moving barrier crash.*

S5.2.1 Vehicles manufactured before September 1, 1991, shall comply with

either, at the manufacturer's option, 5.2.1 (a) or (b). Vehicles manufactured on or after September 1, 1991, shall comply with 5.2.1(b).

(a) When the vehicle is impacted laterally under the applicable condition on either side by a barrier moving at 20 mph, with a test device specified in S8.1.8.1, which is seated at the front outboard designated seating position adjacent to the impacted side, it shall meet the injury criteria of S6.1.2, and S6.1.3.

(b) When the vehicle is impacted laterally under the applicable conditions of S8, on either side by a barrier moving at 20 mph, with a test device specified in S8.1.8.2, which is seated at the front outboard designated seating position adjacent to the impacted side, it shall meet the injury criteria of S6.2.2, and S6.2.7.

4. Section S5.3 of Standard No. 208 would the revised to read as follows:

S5.3 *Rollover.*

S5.3.1 When the vehicle is subjected to a rollover test under the applicable conditions of S8, in either lateral direction at 30 mph with either, at the manufacturer's option, a test device specified in S8.1.8.1 or S8.1.8.2, which is seated in the front outboard designated seating position on its lower side as mounted on the test platform, it shall meet the injury criteria of either S6.1.1 or S6.2.1.

5. Section S6 of Standard No. 208 would be revised to read as follows:

S6. *Injury criteria.*

S6.1 Injury Criteria for the Part 572, Subpart B, 50th percentile Male Dummy.

S6.1.1 All portions of the test device shall be contained within the outer surfaces of the vehicle passenger compartment throughout the test.

S6.1.2 [One of the following two alternatives would be adopted].

Alternative One: S6.1.2 would be revised to read as follows and a new section S6.1.6 would be added.

S6.1.2 The resultant acceleration at the center of gravity of the head shall be such that the expression:

$$\left[\frac{1}{(t_2-t_1)} \int_{t_1}^{t_2} a\,dt \right]^{2.5} (t_2-t_1)$$

shall not exceed 1,000, where a is the resultant acceleration expressed as multiple of acceleration (the acceleration of gravity), and t1 and t2 are any two points in time during the crash of the vehicle when there is evidence of head contact with any part of the vehicle other than the belt system.

S6.1.6 If there is no evidence of head contact, then the acceleration measured at the center of gravity of the head shall not exceed either of the following:

(a) The upper limits of the curve shown in Figure 1 when measured by the accelerometer whose sensitive axis is oriented to record longitudinal fore and aft accelerations, and

(b) The upper limits of the curve shown in Figure 2 when measured by the accelerometer whose sensitive axis is oriented to record inferior-superior accelerations.

BILLING CODE 4910-59-M

FIGURE 1 - INJURY ASSESSMENT CRITERION DUE TO FORE/AFT ACCELERATION OF THE HEAD

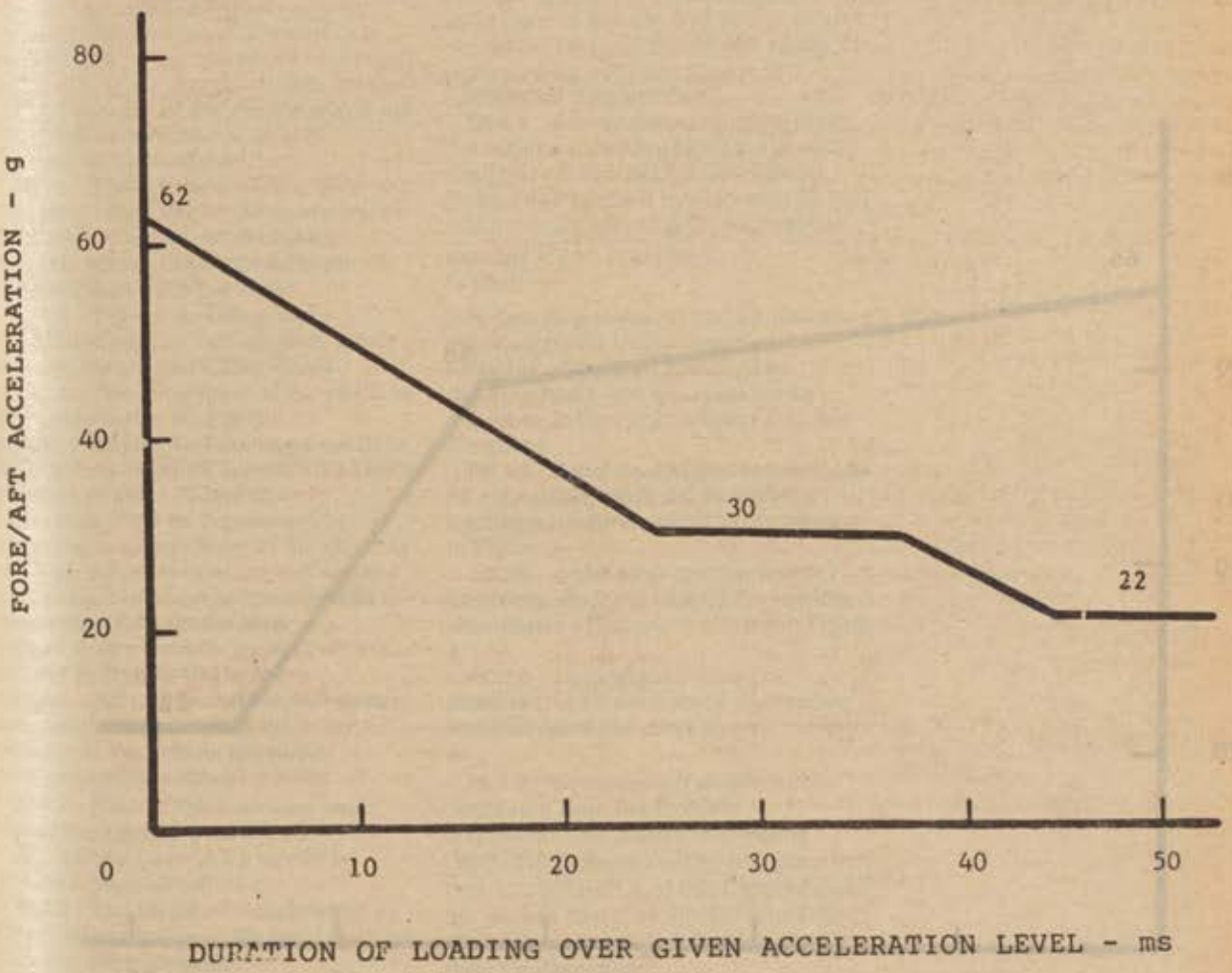

FIGURE 2 - INJURY ASSESSMENT CRITERION DUE TO AXIAL ACCELERATION OF THE HEAD

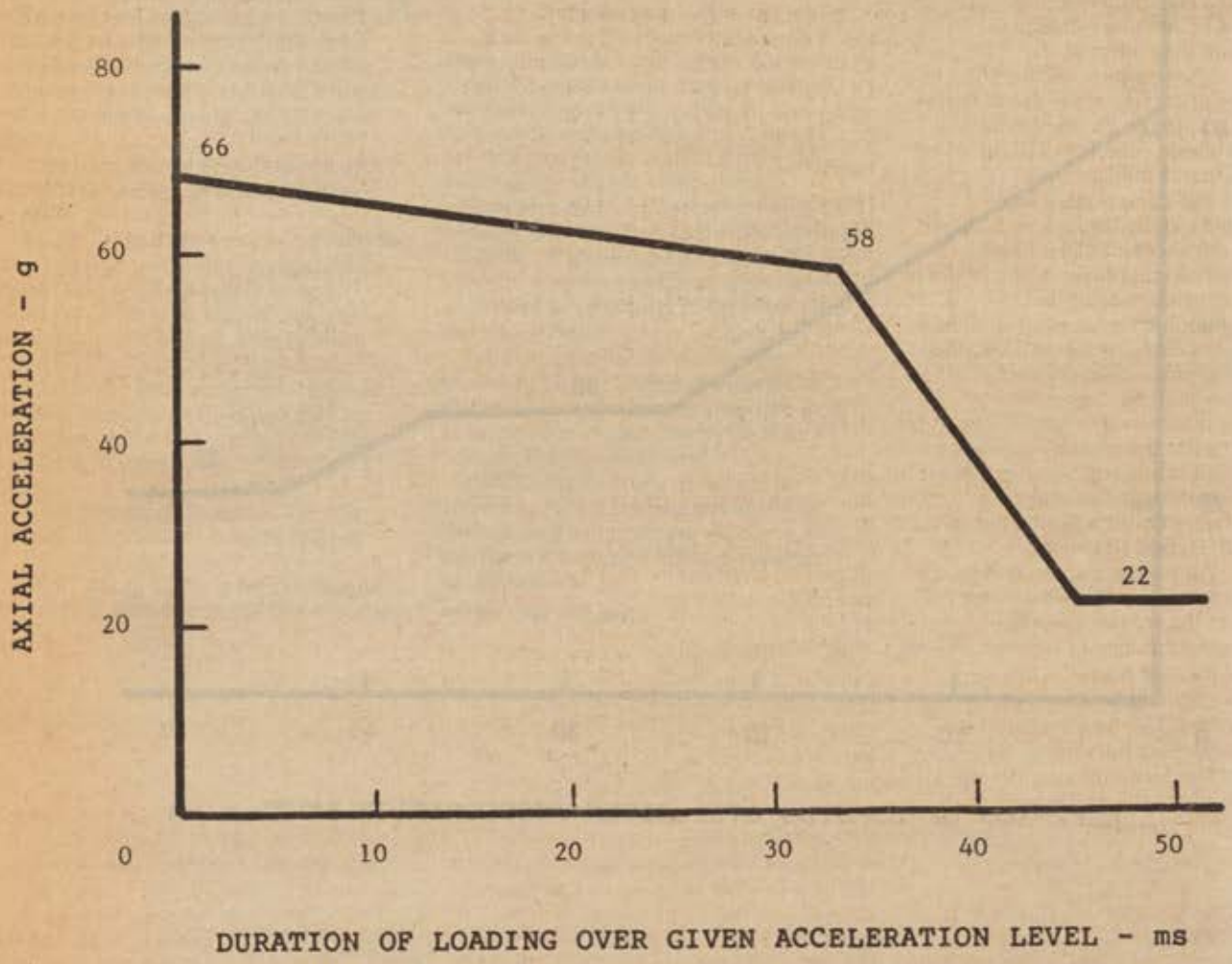

BILLING CODE 4910-59-C

Alternative Two: Section S6.1.2 would be revised to read as follows:

S6.1.2 The resultant acceleration at the center of gravity of the head shall be such that the expression:

$$\left[\frac{1}{(t_2-t_1)}\int_{t_1}^{t_2} a\,dt\right]^{2.5}(t_2-t_1)$$

shall not exceed 1,000 where a is the resultant acceleration expressed as a multiple of g (the acceleration of gravity) and t1 and t2 are any two points in time during the crash of the vehicle which are separated by not more than a 36 millisecond time interval.

S6.1.3 The resultant acceleration at the center of gravity of the upper thorax shall not exceed 60 g's, except for intervals whose cumulative duration is not more than 3 milliseconds.

S6.1.4 The compressive force transmitted axially through each upper leg shall not exceed 2,250 pounds.

S6.1.5 The inner layer of the chamois skin covering the face of the anthropomorphic test dummy shall have not any cuts, tears, or lacerations. The presence of any cuts, tears, or lacerations shall be determined by spreading the inner layer of the chamois skin over a flat translucent surface and examining it to see whether any light is transmitted through the skin.

S6.2 Injury Criteria for the Part 572, Subpart E, Hybrid III Dummy.

S6.2.1 All portions of the test device shall be contained within the outer surfaces of the vehicle passenger compartment throughout the test.

S6.2.2 [One of the following two alternatives would be adopted]

Alternative One: S6.2.2 would be revised to read as follows:

S6.2.2 The resultant acceleration at the center of gravity of the head shall be such that the expression:

$$\left[\frac{1}{(t_2-t_1)}\int_{t_1}^{t_2} a\,dt\right]^{2.5}(t_2-t_1)$$

shall not exceed 1,000, where a is the resultant acceleration expressed as multiple of acceleration (the acceleration of gravity), and t1 and t2 are any two points in time during the crash of the vehicle when there is evidence of head contact with any part of the vehicle other than the belt system.

Alternative Two: Section S6.2.2 would be revised to read as follows:

S6.2.2 The resultant acceleration at the center of gravity of the head shall be such that the expression:

$$\left[\frac{1}{(t_2-t_1)}\int_{t_1}^{t_2} a\,dt\right]^{2.5}(t_2-t_1)$$

shall not exceed 1,000 where a is the resultant acceleration expressed as a multiple of g (the acceleration of gravity) and t1 and t2 are any two points in time during the crash of the vehicle which are separated by not more than a 36 millisecond time interval.

S6.2.3 At any time during the crash, the resultant moment (RM) in the neck shall not exceed 140 lbs-ft in flexion (−My) and 42 lbs-ft in extension (+My) when calculated using the expression:

RM=My (lbs-ft)+[.0287(ft)×Fx (lbs)]

(My (bending moment) and Fx (force) are determined from measurements using the equipment specified in drawing 78051–300 incorporated by reference in Part 572, Subpart E of this Chapter.)

S6.2.4 Axial neck compression loads (+z direction) shall not exceed the loading boundaries of the curve shown in Figure 3.

S6.2.5 Axial neck tension forces (−z direction) shall not exceed the loading boundaries of the curve shown in Figure 4.

S6.2.6 Neck shear forces (x direction) shall not exceed the loading boundaries of the curve shown in Figure 5.

S6.2.7 The resultant acceleration calculated from the thoracic instrumentation shown in drawing 78051–218 incorporated by reference in Part 572, Subpart E of this Chapter shall not exceed 60 g's, except for intervals whose cumulative duration is not more than 3 millisections.

S6.2.8 Compression deflection of the sternum relative to spine, as determined by instrumentation shown in drawing 78051–317 incorporated by reference in Part 572, Subpart E of this Chapter, shall not exceed 2 inches for loadings applied through any impact surface except for those systems which symmetrically load the torso during a crash. For systems which symmetrically load the torso, the thorax deflection shall not exceed 3 inches.

S6.2.9 The force transmitted axially through each femur shall not exceed 2250 pounds.

BILLING CODE 4910-59-M

FIGURE 3 - INJURY ASSESSMENT CRITERION DUE TO AXIAL NECK COMPRESSION LOADING

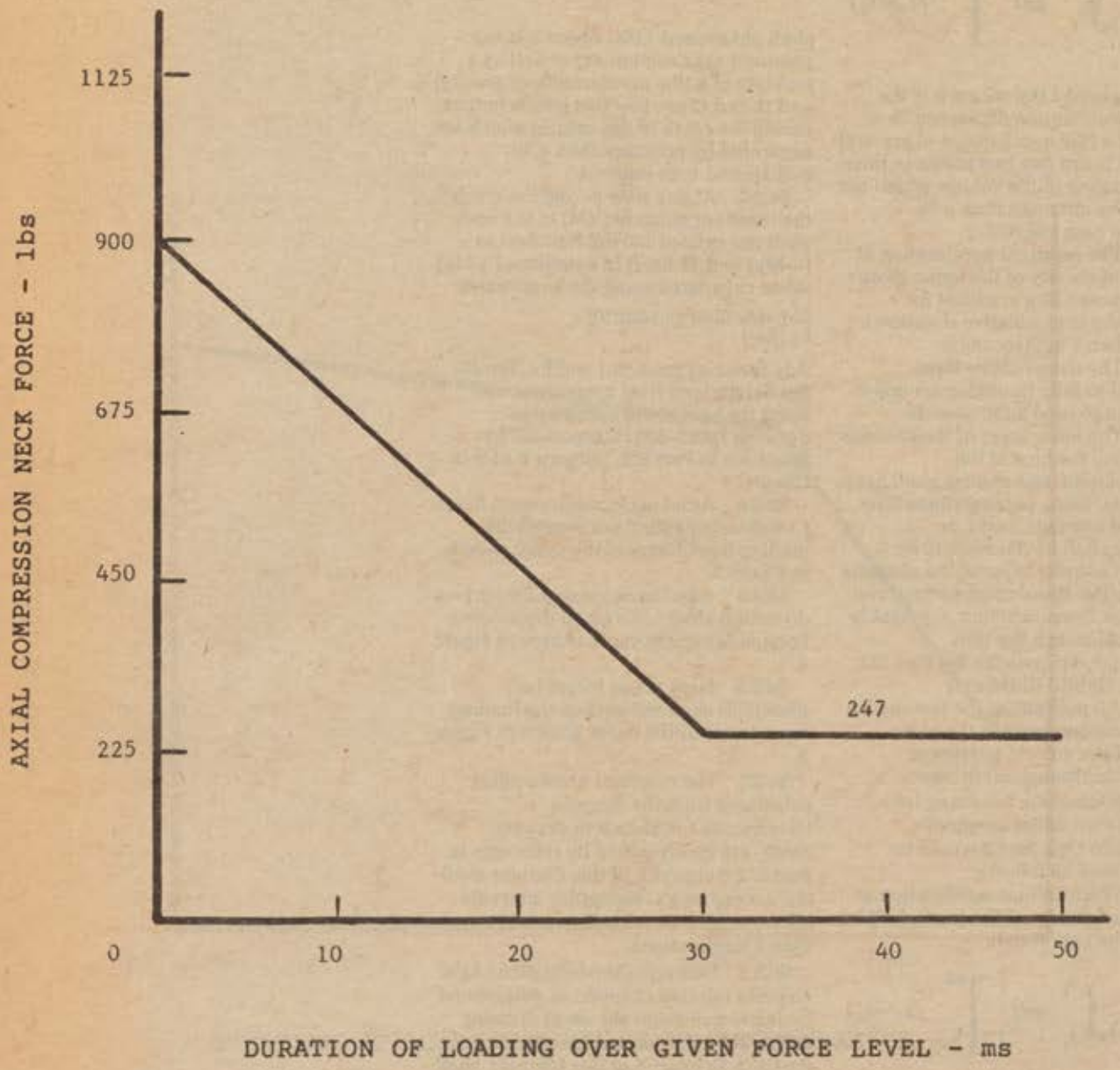

FIGURE 4 - INJURY ASSESSMENT CRITERION DUE TO AXIAL NECK TENSION LOADING

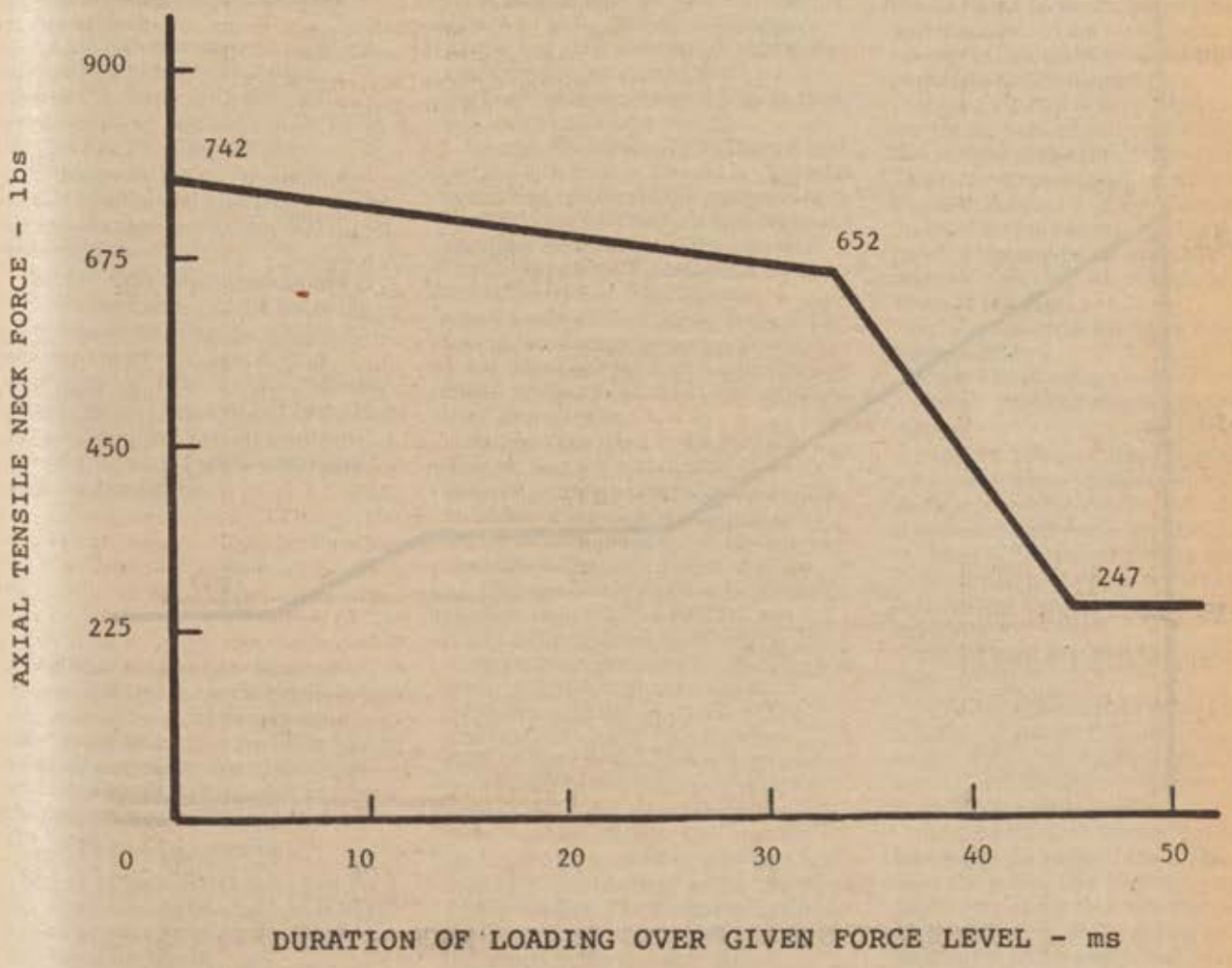

FIGURE 5 - INJURY ASSESSMENT CRITERION DUE TO SHEAR FORCES IN THE NECK IN THE FORE/AFT DIRECTION

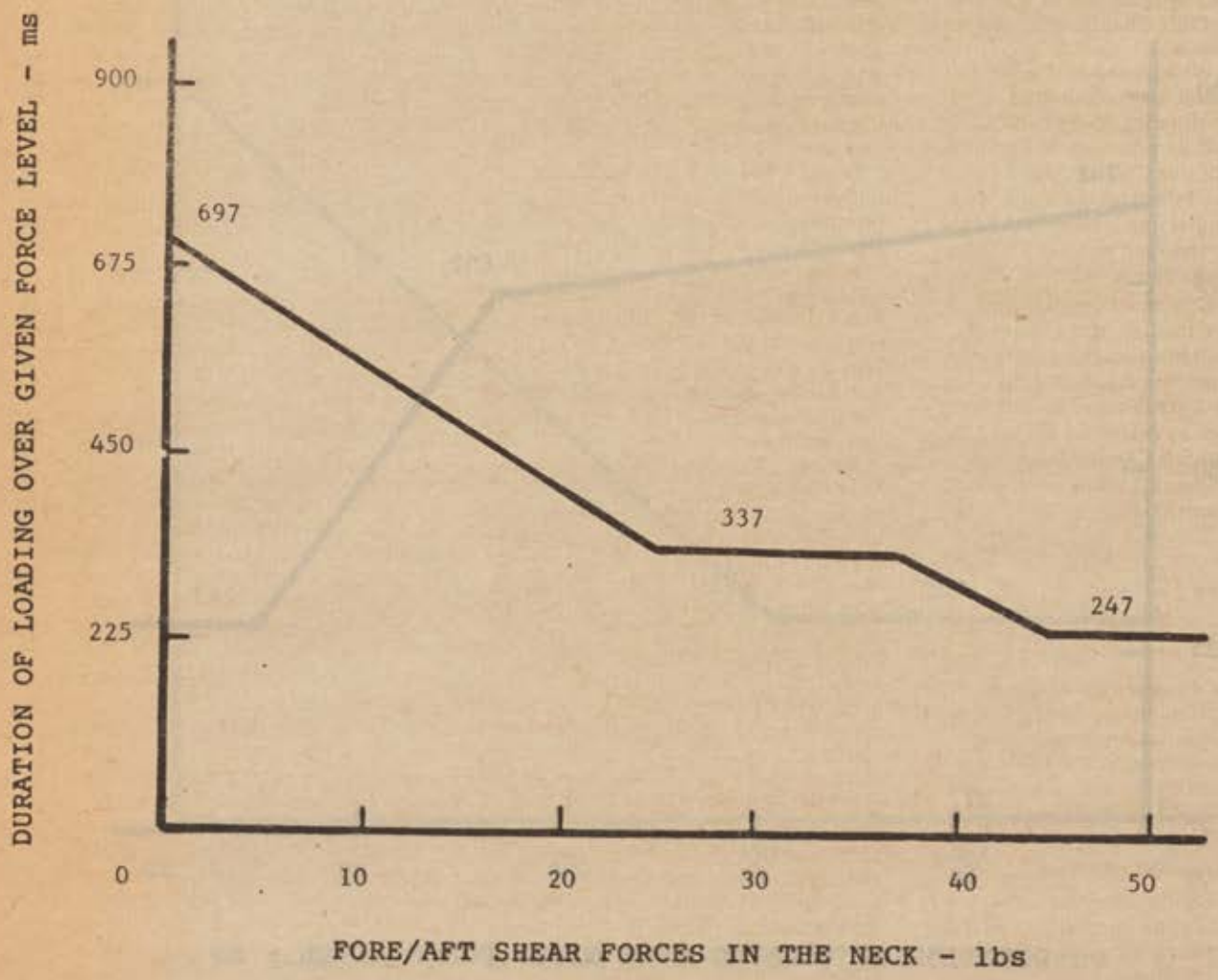

BILLING CODE 4910-59-C

S6.2.10 The inner layer of the chamois skin covering the face of the anthropomorphic test dummy shall have not any cuts, tears, or lacerations. The presence of any cuts, tears, or lacerations shall be determined by spreading the inner layer of the chamois skin over a flat translucent surface and examining it to see whether any light is transmitted through the skin.

S6.2.11 Relative translation of femur and tibia at the knee joint measured using the knee shear module assembly specified in drawing 79051-16 incorporated by reference in Part 572, Subpart E of this Chapter shall not exceed 0.6 inch.

S6.2.12 When measured using the equipment and instrumentation specified in drawing 83-5003-001 incorporated by reference in Part 572, Subpart E of this Chapter, the compressive forces on the inside and outside (medial and lateral) legs of the knee clevis shall not exceed 900 lbs on each leg of the clevis.

S6.2.13 Combined bending and compressive loading of the lower leg, when measured using the equipment and instrumentation specified in drawing 83-5003-001 and 83-5005-001 incorporated by reference in Part 572, Subpart E of this Chapter, shall not exceed a value of 1 when calculated using the expression:

$$\frac{M}{M_C} + \frac{P}{P_C} < 1$$

Where M is the resultant bending moment and P is the corresponding axial compression force when measured either at the knee or at the ankle using the tibia specified in drawing 85-5003-001 incorporated by reference in Part 572, Subpart E of this Chapter and

$M_C = 168$ lbs-ft and $P_C = 7{,}920$ lbs.

S6.2.14 Compressive forces on the inside and outside (medial and lateral) ankle clevis shall not exceed 900 lbs on each leg of the clevis.

6. Section S8.1.8 of Standard No. 208 would be revised to read as follows:

S8.1.8 *Anthropomorphic test devices.*

S8.1.8.1 Anthropomorphic test devices used for the evaluation of occupant protection systems manufactured pursuant to applicable portions of paragraphs S4.1.2, S4.1.3, and S4.1.4 shall conform to the requirements of Subpart B of Part 572 of this Chapter for a 50th percentile male dummy.

S8.1.8.2 Anthropomorphic test devices used for the evaluation of occupant protection systems manufactured pursuant to applicable portions of paragraphs S4.1.2, S4.1.3, and S4.1.4 shall conform to the requirements of Subpart E of Part 572 of this Chapter for a Hybrid III male dummy.

7. Section S8.1.9 of Standard No. 208 would be revised to read as follows:

S8.1.9 *Clothing.*

S8.1.9.1 Each Part 572, Subpart B test dummy specified in S8.1.8.1 is clothed in formfitting cotton stretch garments with short sleeves and midcalf length pants. Each foot of the dummy is equipped with a size 11EE shoe which meets the configuration, size, sole, and heel thickness specifications of MIL-S-13192 and weighs 1.25±0.2 pounds.

S8.1.9.2 Each Part 572, Subpart E test dummy specified in S8.1.8.2 is clothed in formfitting cotton stretch garments with short sleeves and midcalf length pants specified in drawings 78051-292 and -293 incorporated by reference in Part 572, Subpart E of this Chapter, respectively or their equivalents. Each foot of the dummy is equipped with a size 11EE shoe specified in drawings 78051-294 (left) and 78051-295 (right) or their equivalents.

S8.1.9.3 The head of the Part 572 Subpart B and E test dummy shall be covered with two layers, an inner and an outer, of chamois skin (Napa goat-dry). The total thickness of the pair of chamois skins at the center shall be 1.5±0.1 mm (0.06±0.004 in.) and each chamois skin shall be 0.8±0.2 mm (0.03±0.008 in) thick at its center. The average thickness of each chamois skin, computed from four representative measurements including one at the center, shall also be 0.8±0.2 mm (0.03±0.008 in). The chamois skin with the smaller center thickness shall be used as the outer layer. The two chamois skins shall be taut over the skull cap and secured so that they will maintain their position on the headform during the test. The method of securing shall not interfere with possible laceration to the chamois skins.

8. Section S8.1.13 of Standard No. 208 would be revised to read as follows:

S8.1.13 *Temperature of the test environment*

S8.1.13.1 The stabilized temperature of the test instrument specified by S8.1.8.1 is at any level between 66 °F and 78 °F.

S8.1.13.2 The stabilized temperature of the test instrument specified by S8.1.8.2 is at any level between 69 °F and 72 °F

9. A new second sentence would be added to the introductory text of section S10 to read as follows:

* * * Unless specified otherwise, the positioning procedures specified in this section apply to both the Part 572 Subpart B and Subpart E test dummies.

10. Section S10.4.3.1 would be added to read as follows:

S10.4.3.1 *Initial pelvic bone adjustment for Part 572 Subpart E test dummy.*

S10.4.3.1.1 *H point location.* Remove the 50 pound force and record the H point location of the test dummy with respect to vehicle reference surfaces vertically and horizontally.

S10.4.3.1.2 *Pelvic bone orientation.* Rotate the pelvic bone until the 3 inch flat surface of the gage (GM drawing 78051-532 incorporated by reference in Part 572, Subpart E of this Chapter) inserted into the gaging hole in the pelvic bone makes an angle 22½±2½ degrees relative to the horizontal. Remove the gage.

11. Section S10.6 would be revised to read as follows:

S10.6. *Head adjustment.*

S10.6.1 *Part 572, Subpart B test dummy.*

S10.6.1.1 Without inducing torso movement, adjust the head so that the surface of the transverse instrumentation mounting platform in the head is horizontal and the head's midsagittal plane coincides with the longitudinal-vertical plane of the vehicle.

S10.6.2 *Part 572, Subpart E test dummy.*

S10.6.2.1 *H point final adjustment.* If needed, adjust the H point location to within ±0.2 in of the horizontal and vertical dimensions established in section S10.4.3.1.1.

S10.6.2.2 *H point final orientation.* Insert into the gaging hole of the pelvic bone the gaging tool (GM drawing 78051-532) and measure the inclination of the centerline of the gaging tool. If the inclination of the gaging tool exceeds ±½ degree, adjust the pelvic bone assembly by lightly rocking it either clockwise or counterclockwise in the transverse plane without moving the upper part of the torso and without affecting the tolerances of the H point location specified in S10.6.2.1 until the ½ degree is attained. Remove the gage.

S10.6.2.3 *Head adjustment.* If necessary, adjust the upper torso by

rocking it manually and lightly only in the direction which will produce a horizontal orientation ± ½ degree of the transverse instrumentation platform of the head and the midsagittal plane coincides with the longitudinal-vertical plane of the vehicle.

(Secs. 103, 119, Pub. L. 89-563, 80 Stat. 718 (15 U.S.C. 1392, 1407); delegations of authority at 49 CFR 1.50 and 501.8)

Issued: April 8, 1985.

Barry Felrice,

Associate Administrator for Rulemaking.

[FR Doc. 85-8671 Filed 4-8-85; 3:14 pm]

BILLING CODE 4910-59-M

---

49 CFR Part 571

Federal Motor Vehicle Safety Standards for Occupant Crash Protection; Denial of Petition for Rulemaking

AGENCY: National Highway Traffic Safety Administration (NHTSA), Department of Transportation.

ACTION: Denial of petition for rulemaking.

SUMMARY: This notice denies a petition for rulemaking submitted by Mr. Van Storm to resume rulemaking to improve the fit of the torso portion of lap/shoulder belts. The agency has previously proposed requirements to improve the fit of lap/shoulder belts. Based on the comments received in response to that proposal concerning test repeatability, compromise of belt effectiveness and potential effectiveness of the rule in promoting comfort and convenience, the agency decided not to adopt the proposed requirement. The petitioner has not presented any data to warrant reproposing a belt fit requirement.

FOR FURTHER INFORMATION CONTACT: Mr. Robert Nelson, Office of Vehicle Safety Standards, National Highway Traffic Safety Administration, 400 Seventh Street, SW., Washington, D.C. 20590 (202-426-2264).

SUPPLEMENTARY INFORMATION: In March 1984, Mr. Van Storm filed a petition requesting the agency to reopen its rulemaking to improve the comfort and convenience of safety belts. Mr. Storm's petition was based on his experience with the lap/shoulder belt system in his 1983 Ford F-250 pickup truck. He said, in effect, that the upper torso anchorage point for the torso portion of the driver's safety belt is too high, resulting in the edge of the belt rubbing on the side of his neck when he sits directly behind the steering wheel.

The agency has previously issued a notice of proposed rulemaking proposing to increase the comfort and convenience of safety belts. That December 1979 notice (44 FR 77210) included a provision addressing the problems associated with the fit of the shoulder portion of lap/shoulder belts. However, based on an analysis of the comments received on the proposal, the agency in December 1980 (46 FR 2060) decided not to adopt the proposed belt fit requirements. The decision to drop the proposed requirement was based on the issues, which are discussed in detail in the December 1980 notice, of test repeatability, compromise of safety belt effectiveness and the prospect that the proposal would not provide a satisfactory fit for the segment of the belt user population that have made the most complaints about belt fit (i.e., the user smaller than the 5th percentile female or larger than the 95th percentile male).

The agency continues to believe that the presence of, or the lack of, comfortable safety belts are important factors in whether or not automobile occupants may use safety belts. A proper fitting shoulder belt is certainly an important factor and accordingly, the agency will continue to investigate likely methods and/or procedures that will assure a proper belt fit for as large a user population as possible. Although as a part of the implementation of the automatic restraint requirements of Standard No. 208 the agency intends to apply comfort and convenience requirements to automatic belts, the agency is not in possession of any new information and the petitioner has not presented sufficient information that would justify the resumption of rulemaking on the previous proposal regarding the fit of the torso portion of a Type II seat belt assembly.

(Secs. 103, 119 and 124 Pub. L. 89-563; 80 Stat. 718 (15 U.S.C. 1392, 1407 and 1410); delegation of authority at 49 CFR 1.50 and 501.8)

Issued on April 8, 1985.

Barry Felrice,

Associate Administrator for Rulemaking.

[FR Doc. 85-8670 Filed 4-8-85; 3:14 pm]

BILLING CODE 4910-59-M

---

49 CFR Part 571

Federal Motor Vehicle Safety Standards for Occupant Crash Protection; Denial of Petition for Rulemaking

AGENCY: National Highway Traffic Safety Administration (NHTSA).

ACTION: Denial of petition for rulemaking.

SUMMARY: This notice denies a petition by the Committee of Common Market Automobile Constructors (CCMC) to amend the Head Injury Criterion (HIC) limit of Safety Standard No. 208, *Occupant Crash Protection* (49 CFR 571.208). The petitioner sought to increase the HIC value from 1000 to 1500. After reviewing the data presented by the petitioner, NHTSA has determined that CCMC has not provided sufficient justification to change the current HIC value. The agency considers that HIC value to be the best currently available head injury indicator and the best currently available quantitative estimator of the protective levels of vehicle restraint systems.

FOR FURTHER INFORMATION CONTACT: Mr. Stanley H. Backaitis, Office of Vehicle Safety Standards, National Highway Traffic Safety Administration, 400 Seventh Street SW., Washington, D.C. 20590 (202-426-2264).

SUPPLEMENTARY INFORMATION: This notice denies a petition for rulemaking to amend Safety Standard No. 208, *Occupant Crash Protection* (49 CFR 571.208), offered by the Committee of Common Market Automobile Constructors (CCMC). Safety Standard No. 208 specifies performance requirements, based in part on forces and accelerations measured in test crashes, for automatic restraint systems. Although the standard also regulates manual belts, it set no dynamic crash protection requirements for those belts. The purpose of the performance requirements of Safety Standard No. 208 is to reduce the number of fatalities and the severity of the injuries in motor vehicle crashes.

The use of a Head Injury Criterion (HIC) limit of 1000 for the protection of occupants was first proposed and adopted by the agency in 1972 (37 FR 5507). The HIC is calculated from readings from instrumented test dummies in simulated crashes. Based on available research, the agency concluded that prohibiting the HIC from exceeding 1000 would prevent or reduce injuries in actual crashes.

CCMC Petition

This notice addresses the portion of the petition that requested the standard be amended to change the HIC from 1000 to 1500. CCMC also petitioned for an amendment that would make the HIC applicable only to those instances in which a specific head contact occurs. That portion of CCMC's petition is addressed in a separate notice appearing elsewhere in today's **Federal Register** which proposes a number of

amendments to Standard No. 208. The technical material supporting the petition is based primarily on information gathered from tests and crash data on manual lap/shoulder belt systems. The portion of the petition concerning raising the HIC value to 1500 is based on four principal agruments:

(1) The original Wayne State impact tolerance data, on which the HIC limit of 1000 was based, does not reflect the interior surface impact characteristics of modern vehicles which consist of head contacts of longer time duration and permit accordingly higher HIC values.

(2) Cadaver research shows that moderate brain injuries only begin to occur when the HIC exceeds 1500 for long durations.

(3) Test dummy impact responses exaggerate the HIC values up to 80 percent over equivalent cadaver responses.

(4) The HIC limit of 1500 would permit a better selection of optimized designs and a better redistribution of impact forces on various portions of the human body.

Wayne State University Impact Study

CCMC's first basic assertion was that the original Wayne State impact tolerance data, from which the HIC limit of 1000 was developed, do not take into account the interior surface impact characteristics of modern vehicles. The CCMC petition argues that the Wayne State study shows a HIC of 1000 is valid for impacts of time intervals less than 8 milliseconds. CCMC claims that the head contact zones in modern cars deform in a manner that leads to much longer time periods of contact and therefore a HIC limit of 1000 is inappropriate.

During the calculation of the HIC, a maximum value for the HIC function is generated for each possible time period. CCMC did not, however, in its petition consider whether HIC calculations of head contacts at shorter time periods may exceed the critical HIC value. CCMC relied on the assumption that modern car designs produce only longer time periods of contact that those addresses in the Wayne State study.

A NHTSA study has found that shorter duration head contacts are a major safety problem and must be considered. (W.R.S. Fan. *Head Impacts with A-Pillar and Roof Edge Components*. NHTSA Interim Report S4-T01, November 10, 1982.) Raising the HIC level to 1500 during contact would expose the head to considerably higher impulse levels than is currently allowed. Experimental data indicate that increasing the HIC level to 1500 would increase the probability of serious injury from 16 percent of 56 percent. (Position Paper on HIC Levels. Technical Report by the Ad Hoc Committee to the U.S. Delegation to ISO/TC22/SC12/WG6, Detroit, MI, May 1983.)

Cadaver Research

The second basic argument by CCMC is that serious brain injuries only start to occur when HIC values exceed 1500 for head impacts. Using a medical technique which detects vascular bran lesions. CCMC argues that its research supports an increased HIC level of 1500.

CCMC's claim that brain injuries only start to occur at levels in excess of a HIC of 1500 for longer duration impacts appears to be contradicted by the petitioner's own data. Figure 5 of the CCMC petition illustrates that in 19 frontal drop tests a HIC of 1500 or above would produce six injuries at severe/dangerous head injury levels and above. The same figure shows that a HIC 1000 unit would result in two injuries. Also, Figure 6 of the CCMC petition demonstrates that, in case of direct head impacts, the HIC limit of 1500 would produce a much higher probability of head injuries at moderate, serious and severe/dangerous levels than the HIC 1000 limit.

Furthermore, clinical studies of injured patients strongly suggest that neurological lesions may be just as predominant and life threatening in car crashes as the vascular lesions identified in the tests cited by CCMC. At present, there is no known technique capable of identifying neurological lesions in cadavers. Because of the clinical evidence on the importance of neurological lesions and the lack of technology to identify neurological lesions in cadavers, the agency cannot accept CCMS's argument that the HIC level be rasied to 1500 on the basis that there have been no observed vascular injuries in cadavers.

Test Dummy Response

CCMC also criticized present HIC measurement test devices by stating that the deceleration response of current test dummies for short duration contacts of less than 8 milliseconds is about 80 percent higher than instrumented cadavers for HIC values in the 1000 to 2000 range. It is true that for very short duration impacts, the test dummy's head response in frontal impacts is somewhat higher. However, for longer duration contacts, greater than 8 milliseconds, this difference is nearly eliminated. (Dennis Schneider *et al. ATD and Cadaver Head Response to Impact Loading*, presentation at the 11th Annual International Workshop on Human Subjects for Biomechanical Research, October 16, 1983, San Diego, California.)

Further, CCMC's reference to the incompatability between dummy and cadaver responses points to a 1971 report which preceded the Part 572 dummy by 4 to 5 years and was prior to the agency's regulation of test dummies. The Part 572 dummy's head performance results, while not mirroring the response range of cadavers, shows a reasonably good overlap under similar test conditions.

Efficient Vehicle Design

CCMC's final basic assertion is that the HIC limit of 1500 would permit a better selection of fuel and material efficient vehicle designs and a more appropriate loading distribution between various vehicle occupant body segments. This claim appears to be focused on the petitioner's inclination to provide more restraint of the lower torso at the pelvis area and permit more upper body movement, which may increase the possibility of head impact contacts.

NHTSA's extensive test work with restrained vehicle occupants illustrates that it is not in the interest of safety to allow the occurrence of head impacts at the suggested levels until clear scientific and safety data are established in terms of magnitudes, load distributions, directions and duration justifying such impacts. Furthermore, CCMC fails to support its assertion that a HIC 1500 value is more efficient and cost effective with any analysis or examples.

Conclusion

Any revision of the HIC value must be based on solid scientific evidence and sound biomechanical research data. CCMC's petition fails to provide an adequate basis for revising the current HIC value.

The agency recognizes that more detailed head injury prevention criteria are needed. To this end, NHTSA and other interested organizations are continuing multipronged research efforts using experimental, analytical, statistical, and accident investigation techniques to develop new criteria. In particular the agency is working to develop new test equipment and instruments to measure precisely such critical injury parameters as the angular acceleration of the head, pressure distribution on the face, direction and phasing of loading, and the characteristics of the neck which are critical in the control of head rotations.

Various available field injury and experimental data support the continued use of a HIC of 1000 until new head injury criteria are developed. C.W. Gadd

in the Dulles Head-Neck Injury Workshop reviewed the Wayne State data and found broad support for it and the HIC 1000 limit. (Proceedings—*Consensus Workshop on Head Neck Injury Criteria*. Dulles Airport, March 1981. Report published by NHTSA, Washington, D.C., June 1983.) Since then other experts in the field have published additional supportive material. (M. Nakamura, et al. SAE No. 801303. Proceedings, 24th Stapp Car Crash Conference. SAE, Warrendale, PA, 1980; *Position Paper on HIC Levels*. Technical Report by the Ad Hoc Committee to the U.S. Delegation to ISO/TC22/SC12/WG6. Detroit, MI, May 1983.)

NHTSA's judgment, as well as that of the Ad Hoc Committee of Group of Experts to the U.S. ISO delegation, is that a HIC of 1000 is a more conservative protection criteria than HIC 1500 and provides a better assurance of protection to a larger portion of U.S. vehicle occupants. Based on the foregoing, NHTSA denies CCMC's request for proposed rulemaking to raise the HIC limit to 1500.

(Secs. 103, 119, Pub. L. 89-563, 80 Stat. 718 (15 U.S.C. 1392, 1407); delegations of authority at 49 CFR 1.50 and 49 CFR 501.8)

Issued on April 8, 1985.

Barry Felrice,

Associate Administrator for Rulemaking.

[FR Doc. 85-8667 Filed 4-8-85; 3:14 pm]

BILLING CODE 4910-59-M

federal register

Friday
April 12, 1985

Part V

Department of Transportation

Federal Highway Administration and National Highway Traffic Safety Administration

49 CFR Parts 393 and 584

Splash and Spray Suppression Devices

Proposed Rules

DEPARTMENT OF TRANSPORTATION

Federal Highway Administration

49 CFR Part 393

[BMCS Docket No. MC-115; Notice No. 85-4]

Splash/Spray Suppression Devices

AGENCY: Federal Highway Administration, DOT.

ACTION: Notice of proposed rulemaking.

SUMMARY: The FHWA proposes to require: (1) The installation of splash/spray suppression devices on all truck tractors and certain semitrailers and trailers built beginning 1 year from the effective date of the Final Rule on this subject, and operated on the Interstate Highway System on and after a date 4 years from the effective date of a final rule; and (2) the maintenance of all such devices, whether retrofitted or installed when the vehicle was manufactured. This rulemaking is intended to implement section 414 of Pub. L. 97-424 signed January 6, 1983, concerning the reduction of splash and spray from truck combination units operated on the Interstate Highway System.

DATE: Comments must be received on or before May 28, 1985.

ADDRESS: All comments should refer to the docket number that appears at the top of this document and must be submitted (preferably in triplicate) to Room 3404, Bureau of Motor Carrier Safety, 400 Seventh Street SW., Washington, D.C. 20590. All comments will be available for examination at the above address from 7:45 a.m. to 4:15 p.m. e.t., Monday through Friday.

FOR FURTHER INFORMATION CONTACT: Mr. Neill L. Thomas, Bureau of Motor Carrier Safety, (202) 755-1011; or Mr. Thomas P. Holian, Office of the Chief Counsel, (202) 426-0346, Federal Highway Administration, Department of Transportation, 400 Seventh Street SW., Washington, D.C. 20590. Office hours are from 7:45 a.m. to 4:15 p.m. e.t., Monday through Friday.

SUPPLEMENTARY INFORMATION: The Congress, in section 414 of the Surface Transportation Assistance Act of 1982, Pub. L. 97-424, 96 Stat. 2097, 2161, January 6, 1983, declared that "visibility on wet roadways on the Interstate Highway System should be improved by reducing, by a practicable and reliable means, splash and spray from truck tractors, semitrailers, and trailers."

The Act also provides that "The Secretary shall by regulation . . . establish minimum standards with respect to the performance and installation of splash and spray suppression devices." These standards would apply to new vehicles manufactured after 1 year from the effective date of a final rule, and to 4 years from the effective date of a final rule. The Secretary has delegated to the Federal Highway Administration (FHWA) the responsibility for establishing minimum standards with respect to the performance and installation of splash and spray suppression devices for use on truck tractors, semitrailers, or trailers in use which would conform to National Highway Traffic Safety Administration (NHTSA) performance standards contained in 49 CFR Part 584.

The NHTSA and FHWA have been assigned joint responsibility to establish minimum standards with respect to the performance and installation of splash and spray suppression devices for use on truck tractors, semitrailers, or trailers. The NHTSA has been delegated the authority to establish minimum standards for new vehicles. The FHWA was delegated the authority to establish minimum standards for vehicles in use.

Traditional "mud flaps" are intended to reduce the rearward projection of mud, stones, and other materials. Many states require mud flaps on heavy commercial motor vehicles. Unfortunately, research has proven that these conventional flaps made of hard rubber or plastic help increase the generation of vehicle spray because of water striking their hard surfaces. Consequently, the search for solutions to reduce splash and spray has gone beyond the traditional "mud flap." Field and full scale testing of many designs has been conducted over the past 17 years, with gains in spray reduction achieved in some cases.

The latest research in this area was performed for the NHTSA by Systems Technology, Inc.[1] (STI), and provides most of the information in support of this rulemaking. This study was a follow-up to the previous research completed by STI for the FHWA, and was intended to both develop an inexpensive laboratory test method for testing effectiveness and to obtain real world operational performance and life cycle cost data on representative products. These products are marketed for their spray reduction performance by various manufacturers for use by the trucking industry. It appears that certain of these flaps may have the potential to be effective, reliable, and practical.

[1] Johnson, Walter, A., Shapiro, Steve, "Assessment of Truck Splash and Spray Suppression Devices," System Technology, Inc., Technical Report No. 1170-1, March 1983.

The NHTSA has published elsewhere in today's **Federal Register** proposed minimum standards for the performance and installation of splash and spray suppression devices for all new truck tractors, semitrailers, and trailers manufactured on or after a year from the effective date of the final rule. The detailed discussion on the causes of spray, the proposed standards, and the various research efforts set forth in the NHTSA proposed rule will not be repeated here. The FHWA proposes to require these vehicles to be maintained in accordance with the standards established by the NHTSA. It is also proposed that vehicles manufactured prior to one year from the effective date of the final rule be retrofitted by a date 4 years from the effective date of the final rule, with flaps and side skirts that comply with the NHTSA performance standards in effect at that time.

It is being proposed that when suppression devices are replaced they shall comply with the NHTSA performance standards in effect at the time of replacement. This will ensure use of devices that provide the greatest visibility improvement. It is also being proposed that these devices be maintained in conformity with the standard in effect at the time they were installed on the vehicle or when replaced.

It is also anticipated that there will be certain configurations of vehicles in use on which it will be impossible to install the devices in accordance with the installation standard promulgated by the NHTSA. Our purpose in this rulemaking action is to achieve a significant reduction in splash and spray at the least possible cost to the trucking industry. Therefore, modification of a vehicle's configuration will not be required inasmuch as we believe that the cost of such modification would outweigh the benefits to be achieved. However, it is proposed that backflaps be installed at any designated location unless it is impractical, such as between a steering axle wheel and battery box where there is less than 2 inches clearance. Auto carriers may be an example of a vehicle configuration that cannot be retrofitted in conformity with the requirements of the installation standard. Comments from industry would be helpful in establishing retrofit requirements on these types of combinations. Comments to the docket describing vehicles having retrofit problems will be addressed in the final rule.

Currently, there is no Federal requirement for any type of flap or suppressant device for vehicles using

the Interstate System. Various alternatives were considered for requiring in-use vehicles to be retrofitted with suppressant devices. These included flaps with a tunnel test visibility improvement of 35 percent or greater, to be located as follows: (1) Flaps behind the rearmost wheels of the trailer or semitrailer only; (2) flaps behind each of the three axle groups, i.e., steering, drive and rearmost axle of the semitrailer; (3) side skirts, in addition to (2) outboard of the rearmost axle group on the trailer (both sides); and (4) the same as three plus side skirts outboard of both the steering axle and drive axle groups. ("Drive axle group" is referred to by NHTSA in its proposal as the "nose of the trailer"). Options 5 through 8 are identical to 1 through 4, respectively, but use flaps with a minimum tunnel test visibility improvement of 75 percent. Option number (8) is being proposed herein since the manufacturers of the suppression devices have until (4 years from the effective date of the final rule).

It should be noted that we not know the relationship between the rating produced in the spray tunnel tests and visibility improvement in real world situations. (This is also addressed in the NHTSA document.) Data developed by installing current spray suppressant flaps on test vehicles show that spray/suppressant flap with a rating of 75 percent (tunnel test generated) or better may be required to produce improvements in visibility that are generally perceptible. Data developed during vehicle testing of one of the spray suppressant flaps conducted by the NHTSA indicate that the spray reduction percentage registered in the spray tunnel tests may have to be reduced by a factor of 3 to approximate real world visibility improvement. Comment is invited on this relationship as well as on the relationship of various degrees of spray reduction or visibility improvement to actual safety benefits (e.g., reduction in accidents). However, further tests are being conducted to verify the real world performance factor for a number of different spray suppression devices. Meanwhile, the spray tunnel rating for flaps cited above should not be considered as the percentage of perceptible visibility improvement when those flaps are used on vehicles operated over the highways.

After careful consideration of all of the alternatives set forth above, we propose that suppression devices that meet the NHTSA standard (35% or 50% or 75%, as discussed in the NHTSA document) be installed as follows:

1. Behind both wheels of the steering axle of a truck tractor;
2. Behind each wheel of the rearmost truck tractor axle;
3. Behind each wheel of the rearmost semitrailer axle;
4. Behind each wheel of the forward axle or rearmost axle of a forward dual axle of a full trailer;
5. Behind each wheel of the rearmost axle of a full trailer;
6. Behind each wheel of the rearmost axle of a converter dolly.

One device would be permitted behind the dual wheels as long as that device is as wide as both wheels. Side skirts would also be required on the front and rear of all van, flat bed, and tank semitrailers, and full trailers. Tests show that the combination of flaps and side skirts provide a greater reduction in spray than flaps only. We propose, however, to exempt certain trailers from the side skirt requirement. These include containers, container chassis, and pole trailers. This action will provide industry additional time to develop a satisfactory skirt before its use is required on all vehicles.

Allowing for new, properly equipped vehicles, the NHTSA estimates that 1.2 million tractors and 3.2 million trailers will have to be retrofitted between 1 and 4 years from the effective date of the final rule. The majority of the trailers are either vans, platform flatbeds, or tank trailers. It is on these configurations that the backflap/side skirt systems have been tested. These configurations of vehicles are the most predominant combination units in operation. Installation of the device on these types of units would appear to provide the greatest benefit that such service can have.

This rulemaking does not intend to limit suppression devices to those proposed herein. There may be other systems or devices developed that will reduce splash and spray to the same extent or greater. Therefore, this notice solicits comments in response to the questions set forth below regarding devices currently available and other systems or devices that may be effective. Comments received will also be considered in the NHTSA rulemaking.

Questions

Information is solicited regarding the effectiveness of current splash and spray devices:

1. To what extent, if any, do the devices currently used reduce spray?
2. Does the snow buildup behind the wheels of the steering axle have any effect on the steering ability of the vehicle?
3. Do the current devices withstand the extreme cold and buildup of ice or snow?
4. Will the current mud flap brackets withstand the additional weight of the spray suppressant flaps or will they have to be replaced?

Other Systems or Devices

5. What other systems or devices now available or being developed should be considered that will effectively reduce splash and spray?
6. What performance standard, i.e., vehicle performance, etc., should be used in determining the effectiveness of the system or device specified above?
7. What documentation should be required to support the results?

Regulatory Impact

This proposed regulation is considered to be major under Executive Order 12291 and significant under the Department of Transportation regulatory policies and procedures (44 FR 11034; February 26, 1979). The agency's determination that this proposed rule is major and significant is based primarily on the substantial cost that could result from retrofitting and maintaining spray suppression devices. The estimated costs are explained below. A preliminary regulatory impact analysis and initial regulatory flexibility analysis have been prepared and are available for inspection in the public docket. Copies may also be obtained by contacting Mr. Neill Thomas at the address provided under the heading **"FOR FUTHER INFORMATION CONTACT."**

With regard to the assessment of the impact this proposal will have on small entities pursuant to the Regulatory Flexibility Act (Pub. L. 96–354), the reasons for, objectives, and legal basis for this proposed action have been previously explained in this notice. The impacts of this proposed regulation on small entities are discussed in the initial regulatory flexibility analysis. This proposal appears to be favorable to small manufacturers of splash/spray suppression devices if they are capable of meeting performance levels established by the rule. However, there are also a large number of independent truck-tractor/trailer owner-operators who would be required to purchase flaps and skirts. The cost of the approximately 140,000 owner-operators is estimated to be $33,320,000. In keeping with the intent of the Regulatory Flexibility Act, the FHWA encourages all small entities to comment on the impacts of this NPRM.

Estimated Costs

It is estimated that the initial retrofit cost per tractor/semitrailer combination for back flaps at three axle locations and side skirts at both steering axle wheels and both sides at the front and the rear of the trailers, based on 1982 dollars, would be between $238 and $306. It has also been estimated that the total cost to the industry, including maintenance/replacement and decreased fuel efficiency associated with the added weight, would bring the lifetime retrofit cost to approximately $620 million (1982 dollars).

It is estimated that the purchaser of a new tractor/semitrailer combination will incur additional costs of $100 per tractor and $61 per semitrailer.

In the NHTSA NPRM published concurrently with this document, a number of questions are raised and comments requested concerning issues related to the cost, reliability, and practicability of splash and spray suppression devices. We direct commenters' attention to this discussion since the decisions made by NHTSA in its rulemaking will directly affect the requirements and costs imposed on the motor carrier industry as a result of this rulemaking by FHWA.

List of Subjects in 49 CFR Part 393

Highways and roads, Motor carriers—parts and accessories.

(Catalog of Federal Domestic Assistance Program Number, 20.217, Motor Carrier Safety)

(49 U.S.C. 2314 and 3102; 49 CFR 1.48)

Issued on: April 8, 1985.

Kenneth L. Pierson,

Director, Bureau of Motor Carrier Safety.

In consideration of the foregoing, the Federal Highway Administration proposes to amend Title 49, Code of Federal Regulations, Subtitle B, Chapter III, by amending Part 393 as set forth below.

PART 393—PARTS AND ACCESSORIES NECESSARY FOR SAFE OPERATION

Part 393, Subpart G, is amended by adding a new § 393.74:

Subpart G—Miscellaneous Parts and Accessories

§ 393.74 Splash/spray suppression devices.

All truck tractors, semitrailers, and trailers being operated on the Interstate Highway System shall be equipped with splash and spray suppression devices as follows:

(a) *Vehicles manufactured on and after (a date 1 year from the effective date of this Subpart)*—Truck tractors, semitrailers, full trailers, and converter dollies manufactured on and after (a date 1 year from the effective date of this Subpart) equipped with splash and spray suppression devices in conformity with standards contained in Part 584 of this title shall be maintained in conformity with the standard in effect at the time of manufacture or replacement of the suppression devices.

(b) *Vehicles manufactured before (a date 1 year from the effective date of this Subpart)*—Truck tractors, van, flatbed and tank semitrailers, trailers, and converter dollies manufactured before (a date 1 year from the effective date of this Subpart), shall be equipped with splash/spray suppression devices on or before (a date 4 years from the effective date of this Subpart), as follows:

(1) Devices that conform to the minimum performance standard, in effect on (a date 4 years from the effective date of this Subpart), as specified in Part 584 of this title, shall be installed in accordance with the installation requirements of that part, or as near thereto as the vehicle configuration permits.

These devices shall be installed behind—

(i) Both wheels of the steering axle of a truck tractor;

(ii) Each wheel of the rearmost axle of a truck tractor;

(iii) Each wheel of the rearmost semitrailer axle;

(iv) Each wheel of the forward axle or rearmost axle of a forward dual axle of a full trailer;

(v) Each wheel of the rearmost axle of a full trailer;

(vi) Each wheel of the rearmost axle of a converter dolly.

(2) Skirts that conform to the standard specified in Part 584 of this title are required on both wheels of the steering axle and each side at the front and rear of van, flat bed, and tank semitrailers and all full trailers.

[FR Doc. 85-8748 Filed 4-9-85; 1:42 pm]

BILLING CODE 4910-22-M

National Highway Traffic Safety Administration

49 CFR Part 584

[Docket No. 83-05; Notice 1]

Splash and Spray Suppression Devices

AGENCY: National Highway Traffic Safety Administration (NHTSA), DOT.

ACTION: Notice of proposed rulemaking.

SUMMARY: The Surface Transportation Assistance Act declares that visibility on wet roads should be improved by using practicable and reliable means for reducing splash and spray generated by truck tractors, trailers, and semitrailers. To this end, Congress directed the Department of Transportation to establish three types of standards. These are:

(1) Minimum standards for the performance of spray suppression devices to be installed on truck tractors, trailers, and semitrailers;

(2) Installation standards for those spray suppression devices on new truck tractors, trailers, and semitrailers, and a requirement that all such vehicles for use on the Interstate system be equipped with the devices beginning one year after the standards are established under paragraph (1); and

(3) Installation standards for those spray suppression devices on truck tractors, trailers, and semitrailers already in service, and a requirement that all such vehicles in service on the Interstate system be equipped with the devices beginning four years after the standards are established under paragraph (1).

This notice proposes to establish standards regarding the first two requirements shown above. The third requirement will be addressed in a separate notice published elsewhere in today's **Federal Register** by the Federal Highway Administration.

With respect to the first requirement listed above, NHTSA has tentatively determined that the only splash and spray suppression devices which could be practicable and reliable at this time are spray suppressant flaps and side skirts. Spray suppressant flaps are similar to plain mudflaps, but the surface of these flaps which faces the tires is designed so as to reduce the amount of spray formed by the water striking that surface.

This notice seeks comments on several alternative requirements for spray suppressant flaps installed on new vehicles manufactured on and after the day one year after a final rule has been published for this rulemaking action. The preferred alternative is to require those flaps to achieve a spray reduction of at least 35 percent, as measured in a spray tunnel described herein. The other alternatives are to specify a reduction of either 50 percent or 75 percent for those flaps. It may not be feasible for most flap manufacturers to design and produce flaps that achieve a spray reduction greater than 35 percent within one year after publication of a final rule. The agency

tentatively concludes, however, that production of flaps that achieve a reduction of 75 percent would in any event be feasible four years after publication of a final rule, and therefore proposes that spray suppressant flaps used on vehicles manufactured on and after that date achieve a spray reduction of at least 75 percent.

Side skirts are flat surfaces which hang down from the side of a vehicle and prevent water from escaping into the area where it could generate spray next to the wheels. The data currently available to this agency indicate that size is the key variable governing side skirt performance and that skirts which are similar in size, although different in shape, offer substantially identical performance. Hence, this notice does not propose any performance requirements for side skirts.

With respect to the second statutory requirement shown above, this notice proposes detailed installation requirements for mounting spray suppressant flaps and side skirts on new vehicles. The flaps would be required to be installed behind the drive and sterring axles of all new tractors, and behind the rearmost tires for each axle position on new trailers and semitrailers manufactured one year after publication of a final rule. Side skirts would be required to be installed over the rear axle position of all new flatbeds, vans and tank trailers and semitrailers manufactured on and after the same date. Side skirts would be required to be installed over the steering axle position of new tractors and over the nose of new trailers and semitrailers beginning with those manufactured four years after publication of a final rule.

DATES: Comments must be submitted not later than June 11, 1985. The proposed effective date for the requirements, except § 584.5(c)(2)(iii) and § 584.6(a)(2) is one year after publication of a final rule. The more stringent requirements in § 584.5(c)(2)(iii) and § 584.6(a)(2) would become effective four years after publication of a final rule.

ADDRESS: Comments should refer to Docket No. 83-05 and be submitted to: Docket Section, Room 5109, National Highway Safety Administration, 400 Seventh Street, SW., Washington, D.C. 20590. (Docket hours are 8:00 a.m. to 4:00 p.m., Monday through Friday.)

FOR FURTHER INFORMATION CONTACT: Mr. Arthur H. Neill, Jr., Office of Vehicle Safety Standards, NHTSA, 400 Seventh Street, SW., Washington, D.C. 20590 (202-426-1750).

SUPPLEMENTARY INFORMATION: On January 6, 1983, the President signed into law the Surface Transportation Assistance Act of 1982 (Pub. L. 97-424) (hereinafter "STAA"). Section 414 of the STAA (49 U.S.C. 2314), as amended by section 223 of the Motor Carrier Safety Act of 1984, reads as follows:

(a) The Congress declares that visibility on wet roadways on the Interstate system should be improved by reducing, by a practicable and reliable means, splash and spray from truck tractors, semitrailers, and trailers.

(b) The Secretary shall by regulation—

(1) Within one year after the date of the enactment of this title, establish minimum standards with respect to the performance and installation of splash and spray suppression devices for use on truck tractors, semitrailers, or trailers;

(2) Within one year after the date on which the standards are established under paragraph (1) of this subsection, require that all new truck tractors, semitrailers, and trailers operated on the Interstate system be equipped with any splash and spray suppression device which satisfies the standards established pursuant to paragraph (1) of this subsection; and

(3) Within four years after the date on which the standards are established under paragraph (1) of this subsection, require that all truck tractors, semitrailers, and trailers operated on the Interstate system be equipped with any splash and spray suppression device which satisfies the standards established pursuant to paragraph (1) of this subsection.

* * * * *

The NHTSA and the Federal Highway Administration have been jointly assigned the responsibility for carrying out the mandate of section 414(b) by the Secretary of Transportation. In this notice, the NHTSA is proposing to establish minimum standards for the performance of splash and spray suppression devices, as well as installation standards for the spray suppression devices on new vehicles only. In a separate notice appearing elsewhere in today's **Federal Register**, the Federal Highway Administration will issue proposed minimum standards for the installation of splash and spray suppression devices for vehicles in use on the Interstate System.

Splash and Spray Problem

The terms "splash" and "spray" are commonly used together to describe the adverse effects on visibility caused by vehicles travelling on wet roads. However, the two terms refer to very different phenomena.

"Splash" consists of large liquid droplets that fall quickly and ballistically to the ground, while "spray" consists of very small liquid droplets that remain airborne for a period of time in the form of a fog cloud, before falling to the ground. Truck-induced splash does not usually contribute greatly to the reduced visibility experienced either by motorists travelling adjacent to the truck or by the truck driver because the splashed droplets typically remain close to the ground, out of the line of other drivers' vision. Splash may strike adjacent vehicles' windshields, however, if there is puddling or uneven wetting of the roadway surface in front of the truck. In this case, the splashing would totally obscure vision for a brief period.

Spray generally is formed when three elements are present: (1) Water; (2) a hard or smooth surface which is struck by the water; and (3) a turbulent air flow which then picks up and carries away the water. The interaction of these three elements produces very small droplets of water which remain airborne for a time, in the form of a fog cloud around the area of the surface they have struck. The cloud is continuously replenished as long as the water is present, with new droplets forming as others fall to the ground. The airborne droplets obscure the vision of the motorist travelling adjacent to the truck and the vision of the truck driver through his rear view mirrors.

This proposal is directed primarily at reducing visibility problems caused by spray. These problems arise far more frequently than the problems caused by splash. Further, spray remains airborne much longer. However, this proposal would also address splash problems by reducing the distance between flaps and the ground and by requiring installation of flaps in positions where they are not currently installed.

Available Technology for Reducing Splash and Spray

The problem of reducing splash and spray from heavy trucks has been studied by the trucking industry and many governments over the past 20 years. Many different devices designed to reduce splash and spray have been examined.

Conventional fenders and mudflaps were the starting point in this search, with several States and European nations then considering requiring these items of equipment to be installed on all heavy trucks. However, the research showed that, while these items were effective at reducing low speed splash, they are ineffective at reducing the amount of spray generated by trucks at highway speeds.

A DOT spray protector would have been required on most kinds of heavy trucks under a notice of proposed rulemaking issued by NHTSA (35 FR 14091, September 4, 1970). The DOT

spray protector, which was a combination fender, modified side skirt, and mudflap, was developed in laboratory tests sponsored by the Motor Truck Division of the Automobile Manufacturers Association. The final report on those tests indicated that the DOT spray protector would significantly reduce spray at speeds up to 50 miles per hour, but the reduction would not be significant at higher speeds. Comments received in response to that notice stated that a hazardous brake heat buildup would occur if the DOT spray protectors were used on heavy trucks, and that this heat buildup would also damage the tires. When agency testing verified these comments, NHTSA withdrew its proposal (38 FR 28840, October 17, 1973).

Air and water deflectors have also been tested. Both these devices provide benefits by reducing the amount of spray generated, but both are dependent upon the aerodynamics and other characteristics of the tractor/trailer or tractor/semitrailer combination. Since different types of tractors are routinely coupled with different trailers and semitrailers, and vice versa, the effectiveness of air and water deflectors would vary widely.

The only devices which current research indicates might be both practicable and reliable for use on existing vehicle designs are spray suppressant flaps and side skirts. Spray suppressant flaps are flaps which hang down behind the tires and are designed to absorb some of the energy in the oncoming stream of water from the tires, contain and channel most of that water out of the area where spray could be formed, or otherwise reduce the formation of spray clouds behind those tires. Side skirts are flat surfaces which hang down from the side of a vehicle and prevent the water coming off the top of the wheel wells and tires and off the bottom of the vehicle from forming into spray clouds alongside the wheels.

The Federal Highway Administration sponsored tests of many different types of spray suppression devices at Fort Stockton, Texas in 1977. For these tests, lasers were used to measure the density of the spray clouds formed by actual vehicles equipped with the spray suppression devices and driven down a test track. Additionally, checkerboards were set up on the test track so that photographs could be taken through the spray clouds formed by the vehicles. Both the objective (laser) and subjective (visual) comparisons found that a combination of spray suppressant flaps and side skirts was the most effective of the tested devices at suppressing spray.

NHTSA has conducted a series of tests beginning in the summer of 1983 to learn more about the effectiveness of the various spray suppression devices on vehicles in full-scale outdoor testing. NHTSA considered three categories of spray suppression devices in this testing program. The first category consisted of devices which theoretically provide a reduction in the spray generated and also may be reliable and practicable under normal operating conditions. These devices were spray suppressant flaps behind the axles and side skirts mounted over the rear axles of semitrailers.

The second category consisted of devices which provide a theoretical reduction in the spray generated, but which have been shown to have some problems under normal operating conditions. These problems should be correctable with a minimal amount of product development. Examples of devices in this category are side skirts mounted on the nose of semitrailers, which extend to the drive axle tires of the truck tractor when the semitrailer is coupled with the tractor.

The third category consists of devices which are theoretically effective but have not been proven in actual services and for which a test of effectiveness under controlled conditions has not been developed. An example of these devices are inserts which fill the space between the tire and the surrounding vehicle structure and which may not introduce operational difficulties such as excessive heat buildup.

This testing was conducted in three phases. The purpose of the first phase of the testing conducted in 1983 was to develop testing techniques and to make a preliminary evaluation of the effectiveness of several configurations of devices from the first and second categories set forth above. It appeared to the agency that the devices tested provided only minimal spray reduction. However, it was also apparent to the agency that it was necessary to add a target, such as the checkerboard used in the 1977 Fort Stockton tests, to provide more definition of the extent and density of the spray cloud formed by the test trucks.

Accordingly, a second phase of testing was undertaken, again in 1983. A target eight feet high and 12 feet wide using the checkerboard pattern similar to that employed for the 1977 Fort Stockton tests was set up on the test track. The tests were recorded on video tape and on 35 millimeter slides. Many of the devices tested in the first phase of testing were retested, and some of the devices in the third category were also tested. The results of this testing led the agency to four conclusions. These were:

(1) There is a large amount of variability in the amount of spray reduction achieved when using any of these devices to suppress spray.

(2) The wind velocity during the tests has a major impact on the effectiveness of spray suppression devices.

(3) An extensive enclosure between the tire and the surrounding vehicle structure appears to be necessary to obtain consistently perceptible visibility improvements; and

(4) The results raised some significant questions about the ability of flaps and side skirts to reduce spray sufficiently so that the difference is perceptible to the unaided eye.

Because of these concerns and the need for further information on this subject, NHTSA conducted a third phase of testing in 1984 using laser measurements as well as photographs to measure the spray clouds. Each vehicle was equipped with the various spray suppression devices and run a number of times on the same Fort Stockton test track which showed that the spray suppression devices were effective in 1977.

The results of this third phase of testing, which was conducted by STI, demonstrate that the use of extensive spray suppression treatment generally reduces the density of the spray cloud. These reductions are measurable and visible. In addition, the study found that less extensive treatments provide some incremental visibility benefits. However, this research also confirmed that crosswinds have a significant negative impact on the effectiveness of the devices.

The Motor Vehicle Manufacturers Association (MVMA) also conducted research in 1984. The research, which was similar to NHTSA's phase III tests, led MVMA's contractor to conclude that "trucks fitted with a combination of spray reduction devices can reduce splash and spray as much as 50 percent over trucks that use the standard hard rubber flaps only." However, MVMA cautioned that test results could not be repeated consistently, that no specific combination of devices was found best for all vehicles, and that these devices can decrease, but not eliminate, splash and spray.

This mixed pattern of research results leaves the agency with misgivings about the appropriateness of proceeding with rulemaking at this time. Section 414(b) of the STAA specifies: "The Secretary shall by regulation . . . establish minimum standards with respect to the performance and installation of splash

and spray suppression devices . . ." However, section 414(a) of the Act sets forth a Congressional declaration that visibility on wet Interstate roadways should be improved by reducing splash and spray "by a practicable and reliable means." NHTSA is presently unable to conclude whether there are such "practicable and reliable means" for improving visibility, and the agency specifically requests comments on what factors should be considered in determining whether a specific means of splash and spray suppression is practicable and reliable. For the purposes of this proposed action, NHTSA has tentatively determined that "practicable and reliable" splash and spray suppression devices should—

(1) Reduce spray sufficiently so that the unaided eye can perceive a reasonable improvement in visibility under normal wet weather conditions, i.e., wind and rain;

(2) Be capable of being manufactured and installed on today's designs of truck tractors, trailers, and semitrailers; and

(3) Not fail or substantially lose their effectiveness unreasonably soon after they are installed.

It is possible that the costs imposed by requiring splash and spray suppression devices would significantly exceed any benefits which might accrue from such a requirement. NHTSA requests public comments on the extent to which it can and should consider the relationship of the costs to the benefits in any rulemaking action under section 414 of the STAA.

Because NHTSA is unaware of any other spray suppression devices that would be practicable and reliable, the agency is issuing this proposal regarding flaps and skirts. We solicit comments on whether there are any other devices that would be appropriate. (Although various manufacturers have designed aerodynamically efficient vehicles which promote spray suppression, NHTSA does not believe that those systems are universally applicable. Further, those vehicles would have to be tested over the road to measure their performance and therefore determine their compliance. That type of testing is inherently variable, expensive and difficult to repeat.)

NHTSA solicits comments and information from interested persons on the degree of the effectiveness of flaps and side skirts in reducing spray generated by vehicles. NHTSA is interested in obtaining data and test results from the manufacturers of this equipment as to the effectiveness of the various devices in real world conditions or on outdoor testing on vehicles. The agency also requests comments from persons who have driven trucks equipped with these spray suppression devices and motorists who have observed the on-the-road performance of such trucks.

NHTSA has placed photographs and videotapes of the tests it has conducted thus far into the docket for this rulemaking action. The agency specifically solicits views and comments from all interested members of the public on the effectiveness of splash and spray suppression devices, as measured by this testing, and on the procedures followed in the tests.

The agency also specifically requests comments on what course of action it should follow if the available testing and public comments on this notice lead the agency to the conclusion that there are currently no spray suppression devices which are consistently effective in reducing spray such that the reductions can be perceived by the unaided eye. As a related area for comment, NHTSA is interested in the public's view of what course of action should be taken if comments show that devices that provide lower levels of spray suppression are currently practicable for flap and skirt manufacturers, but cannot reliably achieve on-road visibility improvements while devices that provide higher levels of spray suppression can reliably achieve such improvements, but are not currently practicable.

As noted above, NHTSA believes that the STAA's finding concerning practicable and reliable devices means in part that the devices should not fail or substantially lose their effectiveness unreasonably soon after they are installed. The need for overly frequent replacement of the devices would greatly increase the anticipated costs of achieving that goal. Thus, the durability of any equipment which is required to be included on all new trucks is a consideration in this rulemaking action, as is the establishment of warranty requirements.

To be certain that the agency is fully informed on this subject, NHTSA specifically solicits comments and answers to the three questions set forth below. Any other comments related to the durability of the equipment, but not directly addressed in these questions, are also solicited.

(1) What is the expected useful life of spray suppressant flaps, and how does that compare with the expected useful life of ordinary mudflaps? What is the expected useful life of side skirts?

(2) Should any final rule on this subject include some minimum durability requirements for any mandated equipment and, if so, what form should that requirement take?

(3) Does the agency have authority to impose warranty requirements on any mandated equipment?

Test Procedures for Measuring Effectiveness

The agency considered a number of alternative test procedures for measuring the effectiveness of the devices chosen by vehicle manufacturers to reduce the amount of splash and spray. First, the agency had to choose between proposing actual on-road tests of vehicles or proposing controlled laboratory testing of the devices not attached to any vehicle. The on-road tests would offer some advantages, such as measuring the actual performance which might be expected of the total vehicle in service, and measuring the effectiveness of all vehicle systems in reducing splash and spray. However, this approach has been tentatively rejected. The test conditions such as wind speed and direction, ambient light, and road surface conditions, would have to be controlled more carefully than is currently possible. Further, this approach would require large investments of time and money to run each test. Finally, since tractors and trailers are sold separately, and used in many different combinations, it would be necessary to develop a standard reference test tractor (for testing trailers and semitrailers) and a standard reference test trailer (for testing truck tractors). Such specifications do not exist at this time, and considerable research would have to conducted to develop a fair set of criteria.

NHTSA is proposing that, instead of conducting on-road tests of entire vehicles, individual spray suppression components be tested on a mock up of a portion of a vehicle under controlled laboratory conditions. This leaves the question of what controlled conditions should be proposed. The British Standards Institution (BSI) recently adopted a standard for splash and spray suppression for heavy trucks, which includes a laboratory procedure for measuring the effectiveness of spray suppressant flaps. That test employs a procedure in which a specified volume of water is directed onto the flap surface designed to face the tire, and a large container is positioned beneath that flap to catch the water which comes off the bottom of the flap. The water which runs off the bottom of the flap and is collected in the container will, in theory, not be disseminated as spray. The volume of water collected in the

container is then divided by the total volume of water which was sprayed on the flap. The resultant percentage is assigned to the flap as its performance value. NHTSA is interested in receiving comments on what effect, if any, the adoption and implementation of a spray suppression standard by Great Britian should have on this agency's decisions in this rulemaking action.

Since NHTSA is aware of the strong interest in favor of international harmonization of standards, it gave considerable thought to proposing the BSI test as the test procedure in this standard. However, that procedure has been tentatively rejected for the following reasons. That test does not attempt to measure the density of the spray cloud generated by the flap, and therefore is not attempting to test directly the visibility improvements offered by the flap. It is possible that two flaps which measure the same in the test could offer significantly different levels of spray suppression while in use. NHTSA believes that the proposed testing procedure should attempt to measure the actual effectiveness of these devices in suppressing spray clouds.

A 1982 study completed for this agency by Systems Technology, Inc. (STI) evaluated the performance of spray suppressant flaps in a wind tunnel. This procedure uses periscopes to actually look through the spray cloud formed off the flap at targets on a wall behind the resulting cloud. By following this testing procedures, it is possible to approximate the conditions which would be faced by drivers attempting to pass a vehicle with these flaps in place.

The tunnel test procedure is relatively simple to conduct. Two black targets are installed, one on top of the other, on the far end of the tunnel. Flap mounting hardware and spray nozzles to shoot water at the flaps are installed ahead of the targets. A fan is set to cover one end of the tunnel to simulate the air flow around the tires. Two periscopes are inserted through the walls of the tunnel, upwind of the spray nozzles, at the same height as the targets on the far wall. Photometer readings can then be taken through the periscopes to guage the density of the spray clouds formed.

The actual testing begins by taking a photometer reading through each periscope on the targets before the water is turned on. This reading in decibels is designated as DRY. Then a plain untreated rubber flap is installed in the mounting hardware, and the fan and water are turned on. A photometer reading of the top target is taken through the upper periscope over a 30 second period. The highest photometer reading in decibels maintained for at least ½ second is recorded. Immediately following the taking of those readings, a photometer reading of the bottom target is taken over a 30 second period. Again, the highest photometer reading in decibels maintained for at least ½ second is recorded. This procedure is repeated four times, so that a total of five readings have been taken of each target. The ten readings thus obtained are then averaged together and this value is designated as PR. The water is then turned off, and the plain flap is replaced with the spray suppressant flap to be tested. The water is turned on again, and the same photometer reading procedures are followed as were used for the plain flap, until a total of ten photometer readings has been taken, 5 of each target. These ten readings are averaged, and the value is designated as F_i. The visibility improvement from using the treated spray suppressant flap, termed V_T, is then calculated according to the following equation:

$$V_T = 100 \left(\frac{1 - \dfrac{1}{2^{(PR - F_i)}}}{1 - \dfrac{1}{2^{(PR - DRY)}}} \right)$$

Proposed Requirements for Equipment

This notice proposes to establish minimum performance standards for spray suppressant flaps, and would require the flap manufacturer to certify that each flap met those requirements. No vehicle need be certified as to its actual performance with these flaps installed. The reasoning behind this approach is that if the flaps achieve the specified performance level in the tunnel test, and if they are installed on the vehicle in accordance with the proposed installation requirements applicable to vehicles, the amount of splash and spray generated by those vehicles will be reduced. Hence no vehicle performance tests are necessary.

This notice proposes several alternative levels of requirements for spray suppressant flaps to be installed on new vehicles beginning one year after publication of the final rule. The preferred alternative would require those flaps to achieve a V_T in the tunnel test of at least 35 percent. This value is preferred because the available leadtime before that date may be insufficient for manufacturers of spray suppressant flaps to redesign, test, produce and distribute flaps which are significantly better than existing designs. Compliance with a requirement for 35 percent reduction appears feasible since testing by STI of currently produced flaps indicated that all but one existing flap could achieve a V_T rating of at least 35 percent.

However, higher levels of performance for spray suppressant flaps to be installed on new vehicles manufactured beginning one year after publication of the final rule might be practicable. One company has already produced a flap which has a V_T rating of 83 percent in the spray tunnel.

Accordingly, the agency is considering two alternatives to the proposal for one year after publication of the final rule that would require new vehicles to be equipped with spray suppressant flaps that achieve a V_T rating of not less than 35 percent. In tunnel tests, flaps which achieve that level of spray suppression do reduce the density of the spray clouds formed, as compared with conventional mudflaps located in certain positions, and this reduction can be detected by sophisticated equipment, like lasers. However, the spray suppression achieved by 35 percent flaps may not be readily perceptible to the naked eye. NHTSA doubts that the improved visibility which Congress delcared was a goal of section 414 of the STAA referred to improvements detectable by sophisticated equipment but not seen by drivers of vehicles on the Interstate system.

The first alternative requirement being considered for the level for one year after the final rule would be a V_T rating of 50 percent or better. The performance of flaps rated at that level together with the performance of side skirts mandated for vehicles could offer perceptible visibility improvements. However, selecting this alternative would eliminate all but two of the flaps tested in the spray tunnel from being used on new vehicles, and would force the manufacturers of all other flaps to begin an accelerated program to produce flaps which could achieve this level of spray suppression. There is not likely to be sufficient time between the publication of the final rule and its effective date to complete such a program.

The second alternative would require that new vehicles manufactured beginning one year after the final rule be equipped with flaps which achieve a V_T rating of not less than 75 percent. In determining the 75 percent figure, NHTSA acted on the basis of the 1982 STI analysis of testing which indicated

that visibility improvements registered in the spray tunnel must be divided by 3 to approximate the visibility improvements which will show up on the road. Improvements of real world visibility above any given level cannot be perceived by the naked eye until they reach a level of 15 to 20 percent, and become clearly perceptible only at a level of 25 percent. Thus, clearly perceptible improvements in visibility should be shown by spray suppressant flaps alone (without side skirts) if those flaps had a V_T rating of not less than 75 percent.

However, there is only one spray suppressant flap, the one that has a rating of 83 percent, that has been shown in tunnel testing to be capable of achieving this level of spray reduction. Hence, selecting this alternative would force all other flap manufacturers to abandon the new vehicle market until they were able to produce flaps which could achieve this level of spray suppression.

Since considerations of leadtime and competitive problems may lead the agency to adopt the preferred alternative of a 35 percent reduction for one year after the final rule, NHTSA is also proposing a later date for implementation of the 75 percent reduction figure. The agency believes that the possible leadtime and competitive problems associated with specifying this level of performance for one year after the final rule could be avoided by specifying an effective date of four years after publication of the final rule. Accordingly, NHTSA is proposing that all spray suppressant flaps manufactured on or after that date have a V_T of not less than 75 percent.

The agency requests comment on the relationship between the tunnel test results and actual performance on the roadway as well as on the adequacy of the proposals for one year after the final rule and for four years after the final rule. Additionally, the agency is interested in obtaining comments on whether the visibility improvements sought by section 414 of the STAA should include actual reductions in the spray clouds which are not clearly visible to the unaided eye.

Additionally, this proposal would require the flap manufacturers to label the symbol "DOT" permanently on their flaps as a certification that the spray suppressant flap complies with the standard, and indicate whether the requirement to which compliance is being certified is the level of 35 percent for one year after the final rule or the level of 75 percent for four years after the final rule. Flap manufacturers would be permitted to certify that their flaps comply with either of these levels in advance of the effective date for that level.

Side skirts, like spray suppressant flaps, would be required to be installed on vehicles to reduce splash and spray. However, no performance requirements are proposed for side skirts. This is because the 1982 STI testing of side skirts in the spray tunnel showed that there were no significant variations in the performance of those devices. The wider side skirts (i.e., those with greater vertical height) worked better than the narrower side skirts, but all those of the same dimensions performed virtually identically. The need for performance requirements for flaps but not side skirts can be explained by the different functions of these devices. Flaps have water striking them at high speeds directly off the back of the tires. They must absorb some of the energy of the striking water and channel it out of the turbulent air flow to prevent the formation of a spray cloud. Thus, differences in design could affect energy absorption and have a large impact on the effectiveness of the flaps in performing this function. The side skirt, on the other hand, serves only as a surface on which the droplets can coalesce. Accordingly, the side skirt is a much simpler piece of equipment, typically, a simple flat surface. Given this, NHTSA does not believe it is necessary to establish any performance requirements for side skirts. Specifying dimensional requirements for skirts and requiring those devices to be installed in particular locations will serve the purpose of reducing the amount of spray generated by heavy trucks.

The notice proposes to require both flaps and skirts because each is more effective when used in conjunction with the other. Requiring one but not the other would allow the water thrown up by the wheels to escape because of insufficient containment.

Proposed Requirements for Vehicles

At the outset of this discussion, the agency wishes to emphasize again that these standards proposed by NHTSA apply only to new vehicles, not any vehicles already in use. The Federal Highway Administration addresses this latter group of vehicles in its proposal. In doing so, that agency takes into account any particular problems which might arise when equipping vehicles in use with spray suppressant flaps and side skirts.

Single unit trucks and small trailers and semitrailers. Congress did not include single unit trucks within the enumerated types of vehicles to be regulated under section 414. (Single unit trucks are vehicles in which the portion of the vehicle in which the driver is seated and which supplies the power to move the vehicle is connected to the cargo carrying portion by a common chassis.) Similarly, Congress defined trailers and semitrailers as only those vehicles designed to be used in combination with a truck tractor. Hence, neither single unit trucks nor small trailers and semitrailers designed to be used in combination with a passenger car or light truck are covered in these proposed requirements.

Truck tractors. This proposal would require all truck tractors to be equipped with spray suppressant flaps behind the rearmost tires on the drive axle and behind the tires on the steering axle. Flaps in these positions could suppress much of the splash and spray generated by the tractor. In 1982, STI tested flaps in these positions on tractors and found no problems in service, in terms of causing more frequent damage to the flaps or restricting access for tire and wheel maintenance. Further, it should be feasible for manufacturers to equip the tractors with this equipment.

Additionally, all tractors manufactured during the period beginning four years after the final rule would be required to be equipped with side skirts over the steering axle tires. The reasons for providing longer leadtime for compliance with this requirement is that these skirts are not currently installed on trucks sold in the U.S. market. Such devices have been installed on European tractors, but those vehicles have different fender configurations which come down lower on the tires than do the fenders on American tractors. By allowing manufacturers an additional three years to develop and test side skirts compatible with the steering axles of U.S. tractors, NHTSA believes that the products would be practicable and reliable at the time.

Trailers, semitrailers, and converter dollies. This proposal would require that all trailers, semitrailers, and converter dollies manufactured during the period beginning one year after the final rule be equipped with spray suppressant flaps behind the rearmost tires at each axle position. The spray suppressant flaps are already available on the market, and are easily capable of being integrated into the vehicle design by that date. Converter dollies were not expressly mentioned by Congress in the Act. However, these devices, which consist of a trailer chassis equipped with one or more axles a lower half of a fifth wheel and a drawbar, are used to convert semitrailers into full trailers. If

no spray suppressant flaps are required on these vehicles, potential visibility improvements would be forgone. Given Congress' reference to semitrailers and trailers, the relationship between converter dollies and semitrailers and the need for spray suppression on converter dollies, NHTSA believes that converter dollies fall within the purview of section 414. Accordingly, NHTSA is proposing that these vehicles be equipped with spray suppressant flaps behind the rearmost tires.

Also effective one year after the final rule, side skirts would be required to be mounted over the rear axle position of all trailers and semitrailers which are flatbeds, vans, or tanks. These terms are defined in the proposed rule. These three types of vehicles comprise about 77 percent of the semitrailers and trailers on the road. Vans and tanks were tested in the 1982 STI study with skirts over the rear axle position. No significant problems were reported. NHTSA believes that the motoring public could experience reductions in the density of spray clouds formed on wet roads as a result of the combined effect of side skirts and spray suppressant flaps.

NHTSA has no data showing whether or not side skirts would be equally practicable and reliable on all other types of trailers and semitrailers, which make up the remaining 23 percent of the fleet. Accordingly, these vehicles would not be required to be equipped with rear side skirts one year after the final rule. Some types of trailers and semitrailers are totally excluded from the proposed skirt requirements. NHTSA believes that it would not be practicable to mount front or rear side skirts on these vehicles because of their design and construction (these vehicles generally are skeletal frames, with no area in which to contain the water coalescing on the side skirt) and because of the type of operation and use they receive (these vehicles generally spend a significant amount of time off the public roads, and when they are used on the public roads, it is generally over short distances on roads other than the Interstate system). For these reasons, and because the vehicles are comparatively few in number, NHSTA has tentatively concluded that excluding these vehicles from the side skirt requirements is the most appropriate course of action. The excluded vehicles are pole trailers, intermodal containers, intermodal container chassis, agricultural commodity trailers, pulpwood trailers, and straddle trailers.

For the other types of trailers and semitrailers which are not totally excluded from the proposed side skirt requirement and are not flatbeds, vans, or tanks, NHTSA has tentatively determined that it should be possible for the vehicle manufacturers to make the adjustments necessary to permit side skirts to be effectively mounted on the vehicles. Given appropriate leadtime, NHTSA believes these adjustments could be accomplished with minimal cost and technical difficulty. Vehicles in this group include auto haulers, dump trailers, garbage/refuse trailers, and boat racks. NHTSA has tentatively determined that side skirts over the rear axle position could be practicable and reliable on these vehicles by the date four years after the final rule. This notice proposes that those vehicles be so equipped if they are manufactured on or after that date.

The 1982 STI study indicated that there were problems with placing side skirts at the front of trailers and semitrailers to limit the spray from the rear tractor wheels. These skirts were vulnerable to damage during coupling and uncoupling, and during turns when the rear tractor tires ran over some object and moved up to contact the skirt. The failure rate for these skirts was so high that they were removed before the study was completed. Hence, NHTSA has tentatively decided that installation of side skirts at this position would not be practicable one year after publication of a final rule.

INSTALLATION REQUIREMENTS

Vehicles	1 yr after the final rule	4 yrs after the final rule
Truck tractors(all)	Steering axle flaps, drive axle flaps	Steering axle side skirts.
Trailers and semitrailers:		
Vans, tanks, and flatbeds	Rear axle flaps, rear axle side skirts	Nose side skirts.
Pole trailers, intermodal containers, intermodal container chassis, agricultural commodity trailer, pulpwood trailer, straddle trailer.	Rear axle flaps	
All other trailers and semitrailers not listed previously.	do	Rear axle side skirts, nose side skirts.
Converter dollies(all)	do	

Note.—The FHWA notice on this subject sometimes refers to "nose side skirts" on trailers and semitrailers as side skirts over the "drive axle group" of the truck tractors. These terms both refer to the same location.

However, the 1977 STI study also indicated that side skirts at this position are very important to reduce the spray clouds generated by tractors and trailers. Given this importance, the agency is herein proposing that skirts be installed at this position at a later date. NHTSA believes that the problems encountered in the 1982 STI study can be overcome, since they concern only the issue of how to effectively mount the side skirt. The side skirts themselves are currently available and effective. By hinging the mounting equipment, or using flexible side skirts produced by one manufacturer, it should be possible to overcome the problems encountered in 1982 STI study.

Accordingly, this notice proposes that all trailers and semitrailers except those excluded from complying with the side skirt requirements (pole trailers, intermodal containers, intermodal container chassis, agricultural commodity trailers, pulpwood trailers, and straddle trailers) and which are manufactured beginning four years after the final rule be equipped with side skirts over the front wheel position. The following table summarizes the installation requirements proposed in this notice.

Flap and skirt installation. Since the spray suppressant devices can reduce splash and spray effectively only if they are properly installed by the manufacturers, this proposal specifies the locations in which those devices must be installed. Spray suppressant flaps would have to be installed not less than 2 nor more than 12 inches behind the tires whose spray they are intended to suppress. Specifying a range instead of single distance would allow the manufacturers flexibility in mounting these devices on the different types of vehicles covered by this proposed standard, while ensuring that the flaps are in a location where they would be effective. Within this range, the key variables are, as noted below, the relationship of the upper edge of the flap to the top of the tire and of the lower edge to the angle at which water is thrown rearward and upward by the tire.

The agency is proposing that the upper edge of the flaps be required to be at least as high as the top of the tire or tires behind which it is mounted. It is important to contain spray and prevent it from passing over the top of the flap without touching it, and forming a spray cloud as though there were no flap on that tire. However, NHTSA believes that it would not be physically possible to mount the flaps this high on some vehicles. In that situation, this notice

proposes that the flap be mounted at least as high as the bottom of the frame rail.

A special provision is proposed to deal with the problem posed on some vehicles, most frequently tractors, by the presence of a fender or other body structure (most often a battery box) near the tire and to the rear of it. If the flap were attached to the bottom of the frame rail on these vehicles, a significant gap would exist between the flap and body structure. Water would be propelled through this gap onto the hard surface of the fender or battery box, thereby generating a spray cloud. To prevent this, this notice proposes that, in situations where the distance between the fender or other body structure and the tire in front of it is less than 1½ times the radius of the tire, the upper edge of the flap would have to be attached to the fender or body structure such that there would not be a gap of more than one inch between the upper edge of the flap and the fender or body structure.

The lower edge of the spray suppressant flaps would be required to be mounted so that a plane formed between that lower edge and the ground beneath the vertical centerline of the tire behind which the flap is mounted was not more than 10 degrees in the case of flaps mounted behind the steering axle of tractors and not more than 15 degrees in the case of flaps mounted behind any other axle. NHTSA believes that it is more appropriate to propose to allow manufacturers flexibility in locating the bottom edge of the flaps, instead of specifying that the lower edge shall be a fixed number of inches from the ground. This approach addresses the key issue which is the trajectory of the water thrown up by the tire. This approach also allows the manufacturer to select where on the vehicle to mount the flaps, and makes sure that the flaps are low enough to be effective. It also avoids the problems which arise in individual situations where a flap cannot be mounted so that the lower edge is a fixed number of inches from the ground.

The proposal of one flap height for steering axles on tractors and another for all other vehicle axles arises from a concern over the reliability of the flaps. The closer the skirts are to the ground, the more effective they are in preventing splash and spray. On the other hand, the lower the flaps are to the ground, the more likely they are to break while in service. The greatest danger of breakage occurs when tires hit a curb or other elevated surface and pinch the flap against the tire. This tears the flap off its mount or breaks it. (Were it not for this breakage problem, NHTSA would propose an angle of 5 degrees because this would most effectively reduce splash and spray. However, flaps this close to the ground would be subject to frequent breakage.) The currently available data indicate that the tires on the steering axle of truck tractors hit curbs and other objects far less often than the other tires. Accordingly, this proposal would require that those flaps be mounted lower than the other flaps.

An additional mounting requirement is that the flaps cover the full width of the space created by the rearward projection of the tires. That area is where most of the water on the wet roadway will be thrown. To ensure that the flaps fill this area, this notice would require that flaps be at least as wide as the maximum section width of the tires behind which they are mounted, and that they be mounted so as to cover that area. In the case of flaps installed behind dual mounted tires, the flaps would be required to be at least as large as the distance between the most inboard point on the inboard tire and the most outboard point on the outboard tire. They would also have to be mounted so as to cover that entire area.

The proposed side skirt mounting requirements are similar to the flap mounting requirements in that the agency would require the skirts to also be located in the area where they would be most effective in reducing spray. However, these requirements allow less flexibility because there are not as many areas in which skirts could be mounted and be effective. This proposal would require side skirts to hang down from the vehicle at least to the level of the top of the tires which they are protecting, at all points along the required length of the side skirt. This requirement will ensure that most of the spray is prevented from moving into the turbulent air flow around the tires. Further the skirts would be required to be at least as long as the distance between the front of the tire whose spray is being suppressed and its rear, and be mounted so as to at least cover that length. In the case of a side skirt mounted over dual axles, the side skirt would be required to be at least as long as the distance between the forwardmost point of the front tire and the rearmost point of the rear tire, and be mounted so as to cover that space.

There is one situation where side skirts would be required to be mounted over a position where there are no tires to use as a reference point. Skirts will be required to be mounted on the nose of semitrailers. The reason for this requirement is that skirts cannot be required to be mounted over the drive axle of tractors because that would not be practicable. This is true both because there is currently no structure there to which skirts can be attached, and because the addition of such a structure would interfere with the coupling and operation of the tractor with certain trailers. However, the 1977 STI study indicated that it was very important to have side skirts for the drive axle on the tractor. The only way to do this in the case of semitrailers is to mount side skirts on the semitrailer in such a way that they will protect the drive axle tires. To achieve this result, the agency is proposing that skirts to be mounted on the semitrailer so that the gap between the side skirt and the vehicle on which it is mounted is not more than one inch at any point along its length. This will ensure that the side skirts are positioned properly to trap the spray from escaping into the area of turbulent air flow.

Further, the skirt would have to be at least 8 feet long and be mounted with its forward edge even with the most forward point on that side of the semitrailer. This length of 8 feet was chosen because that would protect the drive axle tires on almost all tractors which would be attached to the semitrailer. Finally, the skirt would have to hang down at least six inches from the point on which it was installed. Although 8 inch high skirts were shown to be more effective in the 1982 STI study, the breakage problems associated with side skirts mounted at this position would be lessened if the vertical height of the skirts were less.

Impact Analyses

NHTSA has analyzed this proposal and determined that it is neither "major" within the meaning of Executive Order 12291 nor "significant" within the meaning of the Department of Transportation regulatory policies and procedures. NHTSA believes that these requirements, if adopted, would impose an annual burden of no more than $20.6 million on the manufacturers and operators of truck tractors, semitrailers, and trailers to comply with the proposed requirements for the period beginning four years after the final rule is published. The annual burden of the less stringent, preferred proposal for the period one to four years after the final rule would be somewhat lower. The figure for the former proposal is below the annual threshold of $100 million for classifying a rule as major in the Executive Order. That proposal would increase the sales for the manufacturers of the spray suppression devices. Drivers on the Interstate system may

benefit from improved visibility on wet roadways, but, because of the paucity of relevant accident data, the agency is currently unable to quantify any specific safety benefits. A preliminary regulatory evaluation regarding these impacts has been prepared and placed in Docket No. 83-05. A copy of this evaluation may be obtained free of charge by writing the Docket Section or by calling it at (202) 426-2768.

The agency has considered the environmental implications of this rule in accordance with the National Environmental Policy Act of 1969 and determined that this rule will not significantly affect the human environment. Most vehicles already are equipped with mudflaps, and the amount of plastic and petroleum needed to manufacture spray suppressant flaps is only negligibly greater than the amount needed to manufacture plain mudflaps.

The proposed labeling requirements for spray suppressant flaps are considered to be information collection requirements, as that term is defined by the Office of Management and Budget (OMB) in 5 CFR Part 1320. Accordingly, those labeling requirements will be submitted to OMB for its approval, pursuant to the requirements of the Paperwork Reduction Act of 1980 (44 U.S.C. 3501 *et seq.*). Comments on the proposed information collection requirements should be submitted to: Office of Management and Budget, Office of Information and Regulatory Affairs, Washington, D.C. 20503, Attention: Desk Officer for NHTSA. It is requested that comments sent to the OMB also be sent to the NHTSA rulemaking docket for this proposed action.

Finally, the agency has considered the impacts of this proposed action on small entities, as required by the Regulatory Flexibility Act. That Act requires that any significant economic impacts on a substantial number of small entities be identified, and this has been done in the preliminary regulatory evaluation. Those impacts may be summarized as follows: The manufacturers of spray suppression devices which are small entities may lose up to 44 percent of their business if they are unable to produce rubber flaps which can comply with the proposed requirement of 75 percent spray reduction in the test tunnel. The only flap which has achieved this level of spray reduction to date is made of plastic. They could possibly recapture almost all of this business by producing more side skirts. The vehicle manufacturers and vehicle purchasers will be minimally affected by this proposed rule by slightly increased prices for new vehicles. For a more complete discussion of these impacts, interested persons are urged to read the preliminary regulatory evaluation.

Interested persons are invited to submit comments on the proposal. It is requested but not required that 10 copies be submitted.

All comments must be limited not to exceed 15 pages in length. (49 CFR 553.21) Necessary attachments may be appended to these submissions without regard to the 15-page limit. This limitation is intended to encourage commenters to detail their primary arguments in a concise fashion.

If a commenter wishes to submit certain information under a claim of confidentiality, three copies of the complete submission, including purportedly confidential information, should be submitted to the Chief Counsel, NHTSA, at the street address given above, and seven copies from which the purportedly confidential information has been deleted should be submitted to the Docket Section. A request for confidentiality should be accompanied by a cover letter setting forth the information specified in the agency's confidential business information regulation (49 CFR Part 512).

All comments received before the close of business on the comment closing date indicated above will be considered, and will be available for examination in the docket at the above address both before and after that date. To the extent possible, comments filed after the closing date will also be considered. However, the rulemaking action may proceed at any time after that date, and comments received after the closing date and too late for consideration in regard to the action will be treated as suggestions for future rulemaking. The NHTSA will continue to file relevant material as it becomes available in the docket after the closing date, and it is recommended that interested persons continue to examine the docket for new material.

Those persons desiring to be notified upon receipt of their comments in the rules docket should enclose, in the envelope with their comments, a self-addressed stamped postcard. Upon receiving the comments, the docket supervisor will return the postcard by mail.

List of Subjects in 49 CFR Part 584

Motor carriers, Motor vehicles, Plastic and plastic products, Rubber and rubber products.

In consideration of the foregoing, it is proposed that Title 49, Code of Federal Regulations, be amended by adding a new Part 584 to read as follows:

PART 584—SPLASH AND SPRAY SUPPRESSION

Authority: Sec. 414, Pub. L. 97-424, 96 Stat. 2161 (49 U.S.C. 2314).

§ 584.1 Scope.

This part establishes performance requirements for spray suppressant flaps, and requires that flaps and side skirts be mounted at various wheel positions on truck tractors, trailers, semitrailers, and converter dollies.

§ 584.2 Purpose.

The purpose of this part is to improve driver visibility on wet roadways by reducing the amount of splash and spray generated by truck tractors, trailers, and semitrailers.

§ 584.3 Application.

This part applies to spray suppressant flaps, and to truck tractors, trailers, semitrailers, and truck converter dollies.

§ 584.4 Definitions.

"Agricultural commodity trailer" is used as defined in section 54 of 49 CFR 571.121.

"Container chassis" means a trailer or semitrailer consisting of a wheeled undercarriage and support chassis designed exclusively to transport intermodal containers.

"Flatbed" means a trailer or semitrailer which has a platform that effectively spans the entire length and width of the vehicle and which has no sides, ends, roofs, or other enclosing superstructure higher than the platform. Low-bed heavy haulers and gooseneck trailers are not included within this term.

"Intermodal container" means a cargo container as defined in 49 CFR 450.3(a)(2).

"Pole trailer" means a trailer as defined at 49 CFR 390.8.

"Pulpwood trailer" is used as defined in section 54 of 49 CFR 571.121.

"Semitrailer" means a trailer so constructed that a substantial portion of its weight rests upon or is carried by a truck tractor.

"Side skirt" means a device which is attached to the side or frame of a vehicle at an axle position and which hangs down on the outboard side of the most outboard tire at the axle position and blocks the passage of spray outward from the tires.

"Spray suppressant flap" means a device which is attached to a vehicle which hangs down behind a tire or tires, and whose side facing the tire has a surface designed to absorb some of the energy of the water striking that surface and to channel the water out of the area where it would generate splash and spray.

"Straddle trailer" is used as defined in section 54 of 49 CFR 571.121.

"Tank" means a trailer or semitrailer with a platform on top of which is mounted a fully enclosed pressurized or nonpressurized vessel. The vessel acts as a hermetically sealed contained for cargo in transit.

"Trailer" means a motor vehicle designed for carrying persons or property and for being drawn by a truck tractor.

"Truck converter dolly" means a trailer chassis equipped with one or more axles, a lower half of a fifth wheel, and a drawbar.

"Truck tractor" means the noncargo carrying power unit that operates in combination with a semitrailer or trailer(s).

"Van" means a trailer or semitrailer constructed with a flat or multi-height floor that spans its entire length and width, and has walls on sides and ends, and, in some cases, has a roof. Bottom unloading trailers, open top bin trailers and open top bulk commodity trailers are not included within this term.

§ 584.5 Vehicle requirements.

(a) *Required equipment—truck tractors.* Each truck tractor shall comply with paragraph (a)(1) or (a)(2) of this section, as applicable, and with paragraph (c) of this section.

(1) Each truck tractor manufactured on or after [date one year after publication of the final rule] shall be equipped with spray suppressant flaps, which meet the requirements of § 584.6(a)(1) and § 584.6(b) and which are located behind the rearmost axle tires on the drive axle and behind the tires on the steering axle.

(2) Each truck tractor manufactured on or after [date four years after publication of the final rule] shall be equipped with spray suppressant flaps which meet the requirements of § 584.6(a)(2) and § 584.6(b) located behind the rearmost axle tires on the drive axle and behind the tires on the steering axle, and with side skirts mounted at both the left and right wheel positions on the steering axle.

(b) *Required equipment—trailers, semitrailers, and truck converter dollies.* Each new trailer, semitrailer, and truck converter dolly shall comply with paragraph (b)(1) or (b)(2) of this section, as appropriate, and with paragraph (c) of this section.

(1) (i) Each trailer and semitrailer manufactured on or after [date one year after publication of the final rule] shall be equipped with spray suppressant flaps which meet the requirements of § 584.6(a)(1) and § 584.6(b) and which are located behind the rearmost axle tires and, in the case of trailers, behind the rearmost tires on the forward axle. Each trailer and semitrailer manufactured on or after [date four years after publication of the final rule] shall be equipped with spray suppressant flaps which meet the requirements of § 584.6(a)(2) and § 584.6(b) installed at the same positions.

(ii) Each truck converter dolly manufactured on or after [date one year after publication of the final rule] shall be equipped with spray suppressant flaps which meet the requirements of § 584.6(a)(1) and § 584.6(b) behind the rearmost axle tires. Each truck converter dolly manufactured on or after [date four years after publication of the final rule] shall be equipped with spray suppressant flaps which meet the requirements of § 584.6(a)(2) and § 584.6(b) behind the rearmost tires.

(iii) Each flatbed, tank, and van manufactured on or after [date one year after publication of the final rule] shall be equipped with side skirts mounted over both the left and right wheel positions of the rear axle position.

(2) Each trailer and semi-trailer, except pole trailers, intermodal containers, intermodal container chassis, agricultural commodity trailers, pulpwood trailers, and straddle trailers, manufactured on or after [date four years after publication of the final rule] shall be equipped with side skirts over all wheel positions of all axle positions. Each semi-trailer shall be equipped with side skirts on the nose of the vehicle, as specified in paragraph (c)(2)(iii) of this section.

(c) *Installation and size requirements.*—(1) *Spray suppressant flaps.*—*(i) Flap location.* A flap required by paragraph (a) or (b) of this section to be installed behind a tire shall be mounted not less than 2 inches nor more than 12 inches behind the vertical-tranverse plane tangent to the rearmost surface of that tire. In the case of a flap required to be installed behind a tire on a sliding axle assembly, the flap shall move with the axle assembly so that the distance between the rearmost surface of the tire and the flap remains within the range specified by this section.

(ii) *Flap height.*—(A) *Upper edge.* The upper edge of the flap shall, at all points along its required width, not be less than the height of the horizontal plane tangent to the top of the tire or tires in front of the flap as shown in Figure 1. If it is not physically possible to mount the flap so as to satisfy this requirement, the upper edge of the flap shall be mounted at a height not less than the height of the horizontal plane tangent to the bottom of the frame rail of the vehicle at all points along the required width of the flap. However, if there is a fender or other body structure located behind the wheel for which the flap is to be installed and the distance between that structure and the center of the tire on that wheel is not more than a distance equal to 1½ times the radius of the tire and that structure is more than 2 inches but less than 12 inches behind the vertical transverse plane tangent to the rearmost surface of the tire, the upper edge of the flap shall be attached to the fender or other body structure in such a way that there is not more than a one inch gap between the upper edge of the flap and the fender or other body structure, measured at any point along the upper edge of the flap.

(B) *Lower edge.* At any point along its required width, the lower edge of the flap shall be tangent to or lower than a transverse plane passing through the intersection of the ground plane and the vertical centerline of the wheel on which the tire is mounted and continuing in a rearward and upward angle, as shown in Figure 1. In the case of flaps mounted behind the steering axle of truck tractors, this angle shall not exceed 10 degrees. In the case of flaps mounted at any other position or on any other vehicle, the angle shall not exceed 15 degrees. All measurements shall be made with the axle loaded to its gross axle weight rating.

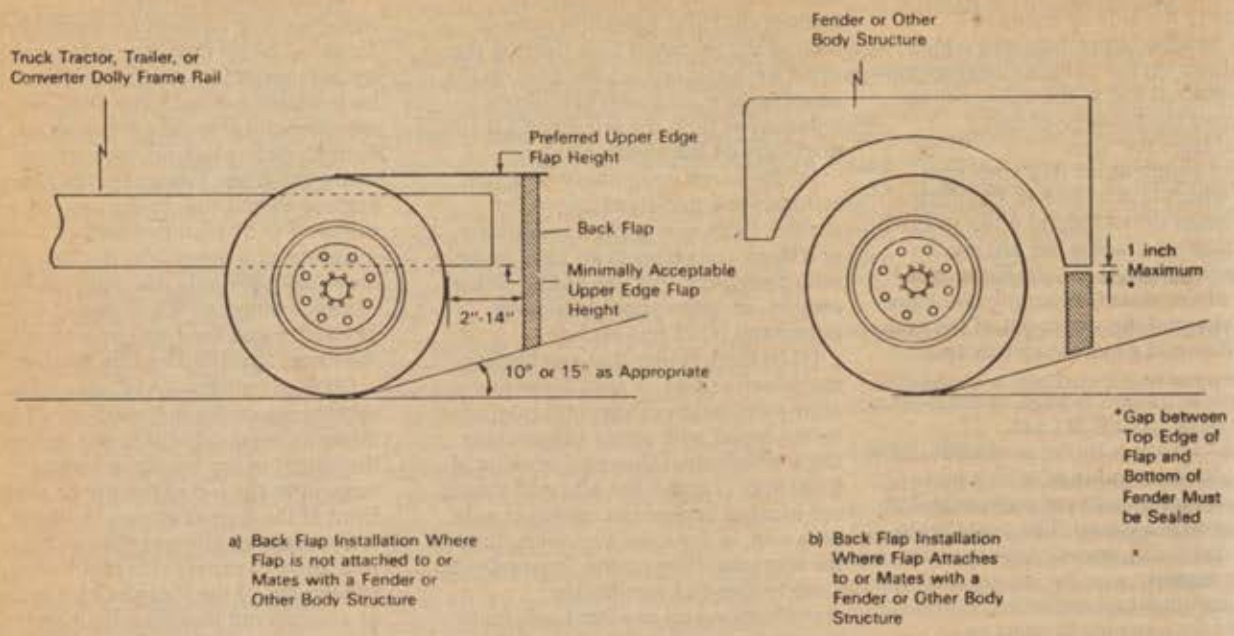

Figure 1. Back Flap Installations

(iii) *Flap width.* At all points along its required height, the width of the flap shall be not less than the maximum section width of the tire behind which it is mounted. In the case of dual mounted tires, the width of the flap shall be not less than the distance between the vertical longitudinal plane tangent to the most inboard point on the inboard tire and the vertical longitudinal plane tangent to the most outboard point on the outboard tire. The flap shall be mounted so as to be tangent to or intersect each of the planes for the entire required height of the flap.

(2) *Side skirts.*—(i) *Side skirt location and size.* Except as provided in paragraph (c)(2)(iii) of this section, the side skirt for a tire or set of tires on one end of an axle shall extend continuously between—

(A) The lowermost edge of the vehicle body, frame, or platform which extends out beyond the vertical longitudinal plane tangent to the most outboard point of the outboard tire on that side of the axle.

(B) The horizontal plane tangent to the top of the tire or tires.

(C) The vertical transverse plane tangent to the forwardmost point of the tire or tires.

(D) The vertical transverse plane tangent to the rearmost point on the tire or tires.

(ii) *Vehicle with movable axle assembly.* In the case of vehicles with movable axle assemblies, the side skirts shall meet the requirement in paragraph (c)(2)(i) of this section for any position to which the axle can be adjusted.

(iii) *Side skirts on the nose of semitrailers.*

Semitrailers which are required to have side skirts installed on the nose shall meet the following requirements:

(A) The side skirt shall be attached so that a vertical transverse plane tangent to its forward edge is tangent to the most forward point on that side of the semitrailer, and shall extend rearward from that plane a distance of 8 feet.

(B) There shall be no more than a one inch vertical gap at any point along the required length of the side skirt between the upper edge of the side skirt and the portion of the semitrailer to which it is attached.

(C) The vertical height of the side skirt, measured from its upper edge to its lower edge, shall be not less than six inches.

§ 584.6 Spray suppressant flap requirements.

(a) *Effectiveness.* The effectiveness of a spray suppressant flap is evaluated by measuring the improvement in visibility provided by a spray suppressant flap as compared with a plain rubber flap under the same controlled conditions in a spray tunnel. This measurement is conducted and calculated according to the procedures specified in § 584.7, and the visibility improvement registered by a spray suppressant flap is termed V_T.

(1) Each spray suppressant flap manufactured on or after [date one year after publication of the final rule] shall have a value for V_T of 35 percent or greater/50 percent or greater/75 percent or greater.

(2) Each spray suppressant flap manufactured on or after [date four years after publication of the final rule] shall have a value for V_T of 75 percent or greater.

(b) *Labeling.* Each spray suppressant flap subject to paragraph (a) of this section shall be permanently labeled on the side of the flap which faces away from the tires in block capital letter and numerals not less than 2 inches high with the following information:

(1) The symbol DOT, constituting a certification by the flap manufacturer that the flap conforms to all requirements of this standard; and

(2) Either the number "35", "50" or "75", if the flap is certified as complying with the requirement of paragraph (a)(1) of this section, or the number "75", if the flap is certified as complying with the requirement of paragraph (a)(2) of this section.

§ 584.7 Test procedures for evaluating spray suppressant flaps.

(a) *Test conditions.* Spray suppressant flaps are tested in a spray tunnel, constructed so as to conform to the specifications in Appendix A.

(b) *Calculations of values for V_T.*

(1) *Measurements.* Test measurements are the highest photometer readings in decibels maintained for at least ½ second. Ten separate measurements are taken as specified in paragraphs (b)(1)(i)–(b)(1)(viii) of this section and averaged together.

(i) Turn on the photometers and the fluorescent lights above the tunnel. Wait at least 30 seconds to allow the photometers and lights to warm up.

(ii) Record photometer readings of the top target through the upper periscope and the bottom target through the lower periscope, with no water turned on inside the tunnel. The average of these two values is used as the DRY value, when making the calculation required in paragraph (b)(2) of this section.

(iii) Install a plain rubber flap in the mounting brackets inside the tunnel. This flap has the same dimensions as the spray suppressant flaps to be tested.

(iv) Turn on the fan and allow the air flow to stabilize.

(v) Turn on the water so that the water flow through the header is constant, and the water pressure through the header is 62 pounds per square inch, as measured by the pressure gauge.

(vi) Take a photometer reading of the top target through the upper periscope. Record the highest photometer reading (in decibels) that is maintained for at least ½ second during a 30 second viewing period. Immediately take a photometer reading of the bottom target through the lower periscope for a 30 second period, and record the highest photometer reading (in decibels) that is maintained for at least ½ second during that time. Repeat this procedure until five readings each have been taken for the top and bottom target, for a total of ten readings. Average the 10 values to produce a single value. This value is used as the value PR, when making the calculation required in paragraph (b)(2) of this section.

(vii) Shut off the water, and replace the plain rubber flap with the spray suppressant flap to be tested.

(viii) Repeat the procedures specified in paragraphs (b)(1)(iv) through (b)(1)(vi) of this section. The average of the ten readings taken for the spray suppressant flap shall be used as F_i, when making the calculation required in paragraph (b)(2) of this section.

(2) *Analysis of results.* Calculate the V_T for the spray suppressant flap using the following equation:

$$V_T = 100 \left(\frac{1 - \dfrac{1}{2^{(PR - F_i)}}}{1 - \dfrac{1}{2^{(PR - DRY)}}} \right)$$

Appendix A.—Design of Spray Tunnel Test Facility

Background

This Appendix describes the design and construction details of a tunnel intended to simulate a water spray and aerodynamic environment analogous to that found when a combination unit truck is operated at highway speeds. It is used to test the performance of spray suppressing, water impact attenuating, backflaps or mudflaps; fenders; and side skirts or valances. Many of the design details of this tunnel are critical in terms of their effect on the performance measurements that are taken in the tunnel. These dimensions will be noted throughout this text and the accompanying drawings with an asterisk (*). Many other features of the tunnel, while not critical to the performance measurements, are important in terms of the proper functioning of the tunnel, its durability, and ease of use. These features will be described throughout the text but it is not absolutely essential that these dimensional or descriptive characteristics be adhered to rigidly in order for the tunnel to function properly. Design flexibility is therefore permissible in these instances, but to the extent possible the dimensions should be followed.

Overall Description

The tunnel is comprised of a rectangular test section nominally 4 feet high, 5 feet wide, and 24 feet long. It is open on the downwind end of the tunnel. The test section is connected at that end to an octagonal transition section which is 8 feet long. This section is rectangular at its downwind end and circular at its upwind end. Attached to the circular end of the transition section is a 60 inch (*) diameter fan which delivers air downwind through the test section. The intake side of the fan is covered except for a small slit to choke down the volumetric flow of air through the tunnel.

The tunnel is supplied with water to an array of nozzles which are mounted behind the above two sets of dual 10.00–20 truck tires positioned within the tunnel to simulate one-half of the truck tandem axle set. The water is pumped in a closed-loop system from a water recovery reservoir, through the pump, to the nozzles. From there, water sprayed in the tunnel is eventually captured and drains back into the recovery reservoir.

The tunnel is lighted from above for the middle 16 feet of the test section with fluorescent lights. Photometric light intensity measurements are made of spray clouds within the tunnel with the use of a periscope system, viewing from the upwind end of the tunnel looking downwind.

The entire facility must be housed indoors to minimize the effects of sunlight on the measurements and, generally, to facilitate testing ease.

The facility is shown schematically in Figure 1.

Test Section Construction Details

The test section of the tunnel is comprised of six sections, each nominally 4 feet long, on centers. It is

constructed of 2 inch x 4 inch framing and is lined on the sides with ¼ inch masonite, and on the floor with ¾ inch plywood. The entire ceiling of the first and last sections are also lined with masonite. The inside dimensions of the tunnel test section are 60 inches wide (*) by 47 inches high (*). The inside surfaces of the sixth section (counting from the upwind end of the tunnel), excluding the floor, are painted flat black (*). The inside surfaces of the remaining sections, excluding the floor and viewing windows, are painted semi-gloss white (*). Construction details are shown in Figures 2 and 3.

The plywood floor of the tunnel is covered over its entire length with a linoleum or vinyl floor covering to capture and drain the water that is generated with the test section. The floor slopes from the upwind end towards the downwind end at a 3° angle. Details of the installation of this covering are shown in Figures 4 and 5.

Referring to Figure 1, and counting from the upwind end of the tunnel, one side of the second and third sections of the test section is covered with ¼ inch plexiglass to enable viewing of the flap hanger and test fixture assembly area and also to provide access to the inside of the tunnel. The plexiglass panel on the second section is fixed (see Figure 6). The panel on the third section is hinged to provide an access door and is shown in Figures 7 and 8.

Two sets of dual 10.00–20 truck tires are mounted inside the test section portion of the tunnel, flush against the side wall opposite the window and access door, in sections 1, 2, and 3 as shown in Figure 9. Wooden blocks are used to brace the tires in these locations. The longitudinal spacing of these tires within the test section is critical (*), and is shown in figure 9.

Transition Section Construction Details

The transition section of the tunnel is intended to accommodate a 60 inch diameter circular fan (*) at the upwind end and translate that shape to a rectangular cross section at its downwind end (see Figure 10). A cross section upwind end of the transition section is shown in Figure 11. It is octagonal. The circular fan shroud shown in Figure 12 fits inside this octagonal cross sectional area shown in Figure 13. Gaps created at the interface between the shroud and the octagonal cross section must be filled with a suitable material to seal it off from outside air flow. The walls of the transition section are made of eight ¼ inch masonite panels. The design of these panels is shown in Figure 14.

At the extreme upwind end of the transition section, a wire mesh guard (see Figure 15) is attached to the back of the fan shroud to protect tunnel users from hazard and also to provide a support for the air intake enclosure. Intake air for the fan is admitted only through the air intake slit shown in Figure 15, the dimensions of which are 64 inches x 1 inch (*). All other areas of the enclosure are sealed airtight with duct tape and cardboard or other suitable materials.

A honeycomb diffuser and turbulent air generator is located at the downwind end of the transition section (see Figure 16). It is constructed from ½ inch thick x 9/16 inch square panels of white translucent fluorescent light diffuser grids 10 of which arranged to create an overall diffuser that is nominally 5 inches thick and covers the intake throat of the test section portion of the tunnel. Where necessary, any gaps that are created between the walls of the octagonal transition section and the diffuser grid panels shall be filled with suitable material to create an effective airtight barrier such that air flow originating from the fan is directed entirely into the throat of the upwind entrance of the test section portion of the tunnel.

Fan Assembly

The fan used to deliver air to the tunnel is a six blade, 60 inch blade diameter (*) fan which rotates at a nominal speed of 505 revolutions per minute. Under conditions of ¼ inch (water) of intake static back pressure this fan will deliver 44,100 cubic feet per minute (CFM) (*) of air. An example of a fan meeting these requirements is shown in Figure 17. The fan is mounted to the upwind end of the transition section of the tunnel as shown in Figures 12 and 13 and is sealed with the air intake guard and enclosure as shown in Figure 15. Air gaps at the interface between the fan shroud and transition section shall be sealed with duct tape or other suitable materials.

Lighting System Design Details

The lighting system mounted in the ceiling of the tunnel is intended to provide a uniform light source from which measurements of spray cloud veiling luminance can be made. It is installed in the second, third, fourth, and fifth sections of the test section portion of the tunnel, above plexiglass panels that are mounted in the ceiling of these sections as shown in Figure 18. Two fluorescent lamp fixtures, each 4 feet long, and each having two 40 watt lamps/tubes (*) shall be mounted side by side above the plexiglass panel installed in the ceiling of each of these sections. Thus, a total of 8 fixtures will be installed with a total of 16 (*) 40 watt lamps, in the test section portion of the tunnel. The mounting of these lamps and the sealed box in which they are enclosed is also shown in Figure 18.

In order to facilitate changing light fixtures/bulbs, either the top or one of the sides of the box containing the fluorescent lamp fixtures should be removable.

Water Delivery System Design Details

Water is pumped to an array of spray nozzles through a closed loop delivery/recovery system shown schematically in Figure 19. If the pump used is a gasoline powered engine, experience has shown it is preferable to install the pump outside the building which houses the tunnel to minimize noise and exposure to exhaust fumes. Water is delivered to the nozzle headers at supply line water pressure of 62 psig (*). An example of a pump capable of delivering this pressure is shown in Figure 20. Water is supplied to the pump from a collection trough and reservoir system located at the downwind end of the sixth section of the test section portion of the tunnel, as shown schematically in Figure 1. Details of the reservoir design are shown in Figure 21. Water is delivered from the pump to the nozzle header arrays via supply lines shown in Figures 22, 23, and 24.

The header arrays are located horizontally and vertically within the second and third sections of the test section portion of the tunnel as shown in Figure 25. These dimensions are critical (*). Inside the tunnel, there are three headers as shown in Figure 26. Headers 1 and 2 each contain two "H" nozzles (Spraco Inc., Model No. 2057190 [*])** oriented to spray vertically upward at angles (*) as shown in Figure 26. These headers are only used when studying fender or side skirt performance and are not necessary for compliance verification testing of backflap performance. Header No. 3 contains four "1" nozzles (Spraco Inc., Model No. 23200804 [*]) oriented to spray rearward in the downstream direction as shown in Figure 25. The transverse orientation of the nozzles, relative to the tires around and behind which they are mounted is shown in Figure 27. These dimensions are critical (*).

The distance between the tip of these "I" nozzles and the rearward-most edge of the flap (see Figure 28) which is being tested is 20 inches (*). If necessary,

**Spraco Inc., East Spit Brook Road, Nashua, NH 03060.

either the flap or the nozzle must be moved longitudinally up or down the test section of the tunnel to ensure that this distance is maintained.

Test Flap and Fender Attaching System/ Design Details

The third section of the test section contains a backflap attachment bracket assembly designed to maintain the rearward-most edge of the test flap 20 inches (*) behine the "I" nozzle array of header No. 1. The details of this assembly are shown in Figure 28.

Fender and/or side skirt systems which may be tested on an optional basis in the tunnel are mounted as shown in Figures 28, 29, and 30.

Ahead of the forward-most set of dual tires, in the first section of the test section, an air flow blocking plate is mounted. The details of this installation are shown in Figure 32.

Performance Measurement System/ Design Details

Photometer measurement of veiling luminance, and hence spray cloud density, are made with the use of a system of two periscopes aimed to view two black targets at the downwind end of the tunnel. The two periscopes are located in the first section of the test section, and are shown in Figures 33, 34, and 35.

The viewing targets are mounted in the sixth section and are shown in Figures 36 and 37. A convenient distance beyond the end of the test section, downwind of the sixth section, a black drape is hung so that when viewing through the periscopes, the entire visual field behind the targets is black.

When measurements are being taken, the room in which the tunnel is housed should be darkened to the extent practicable, to avoid extraneous effects of ambient light sources outside the tunnel.

BILLING CODE 4910-59-M

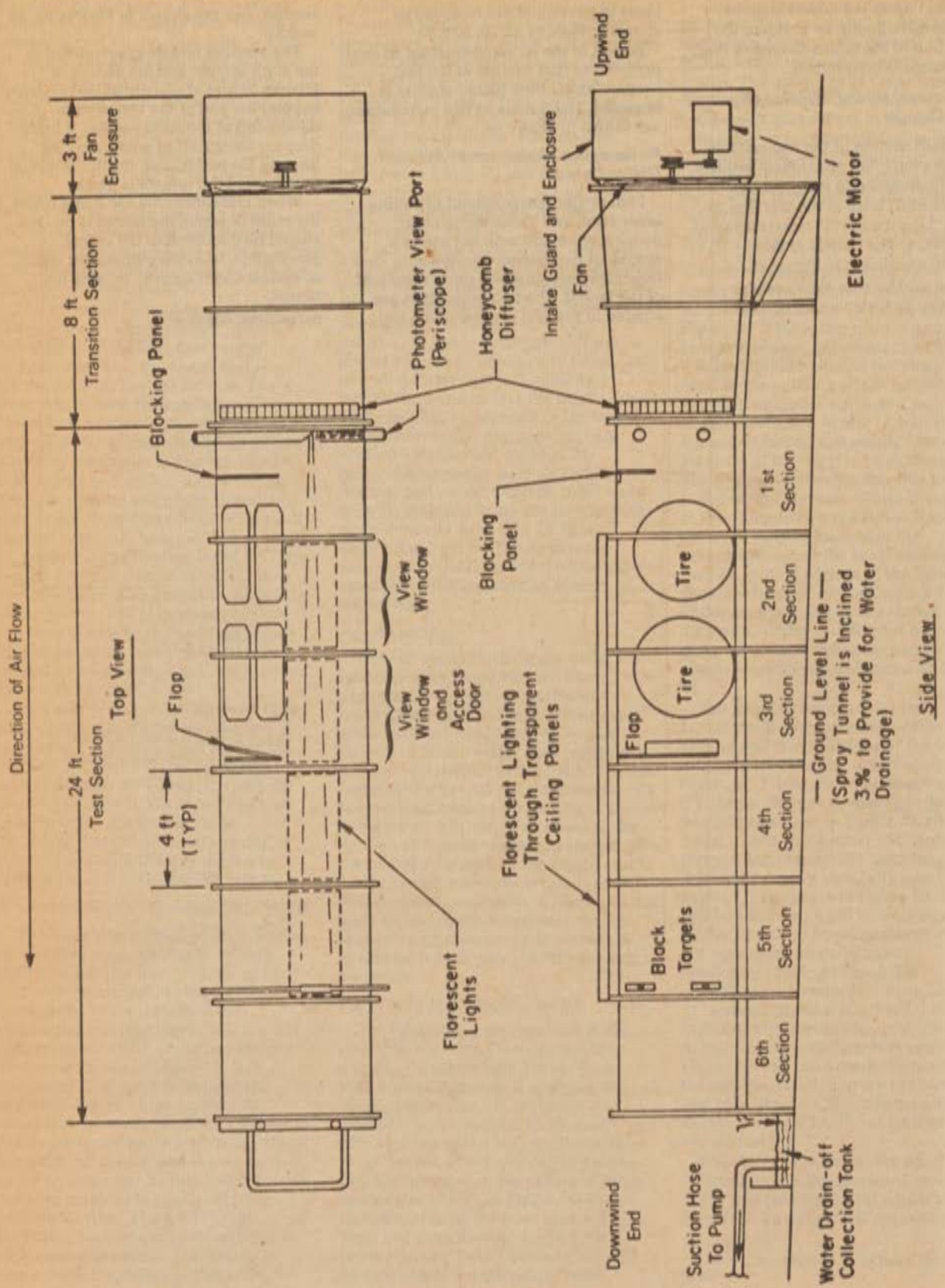

Figure 1. General Layout of Spray Tunnel

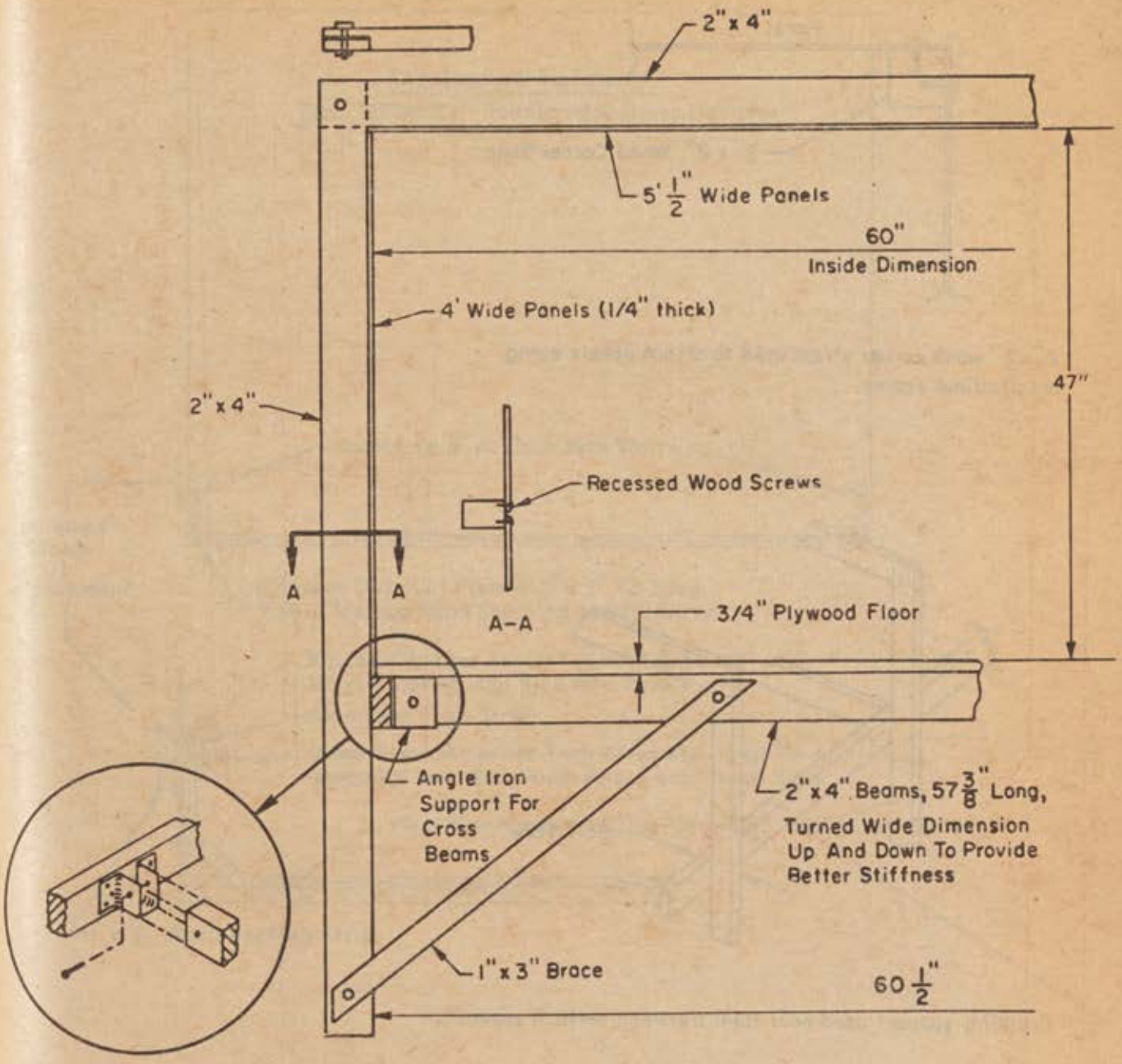

Figure 2. Details of 2" x 4" Framing for Tunnel Support

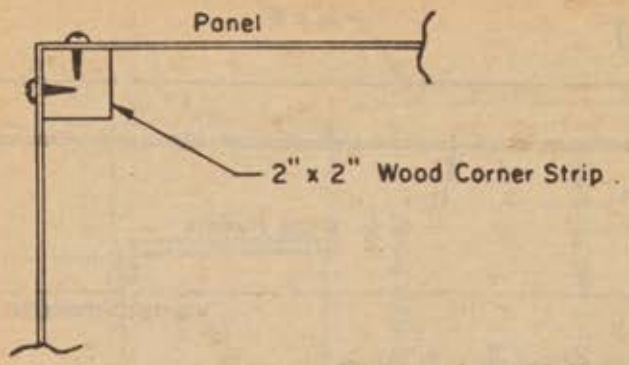

2"x2" wood corner strips used to attach panels along longitudinal seams.

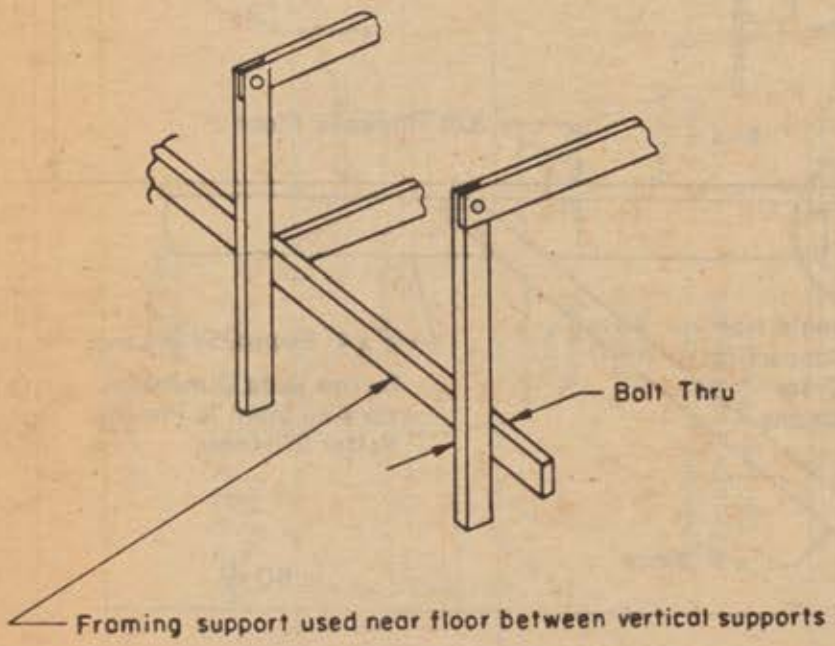

Figure 3. Details of Tunnel Framing and Wall Panel Attachment

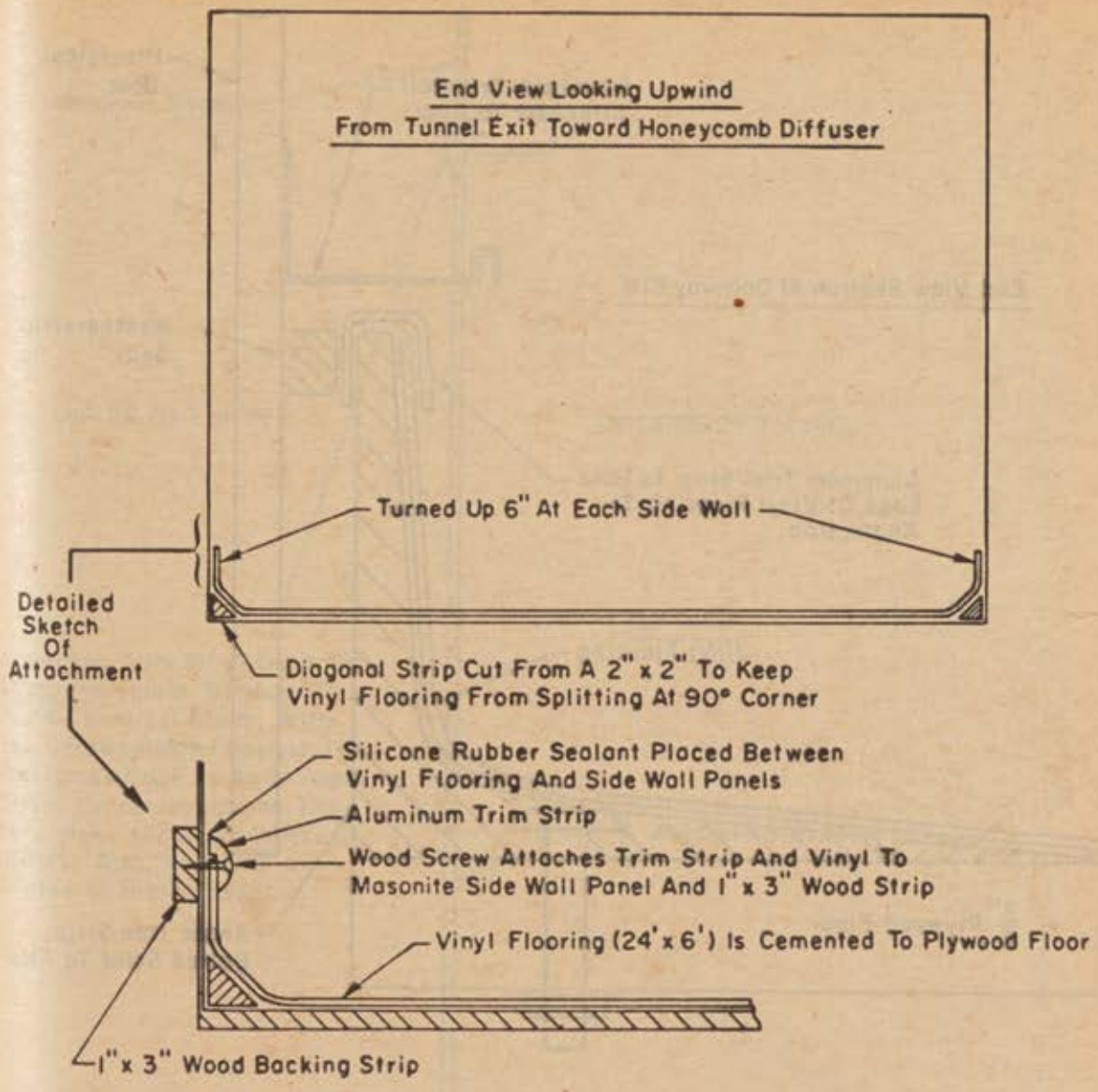

Figure 4. Vinyl Flooring (for Water Collection and Drainage)

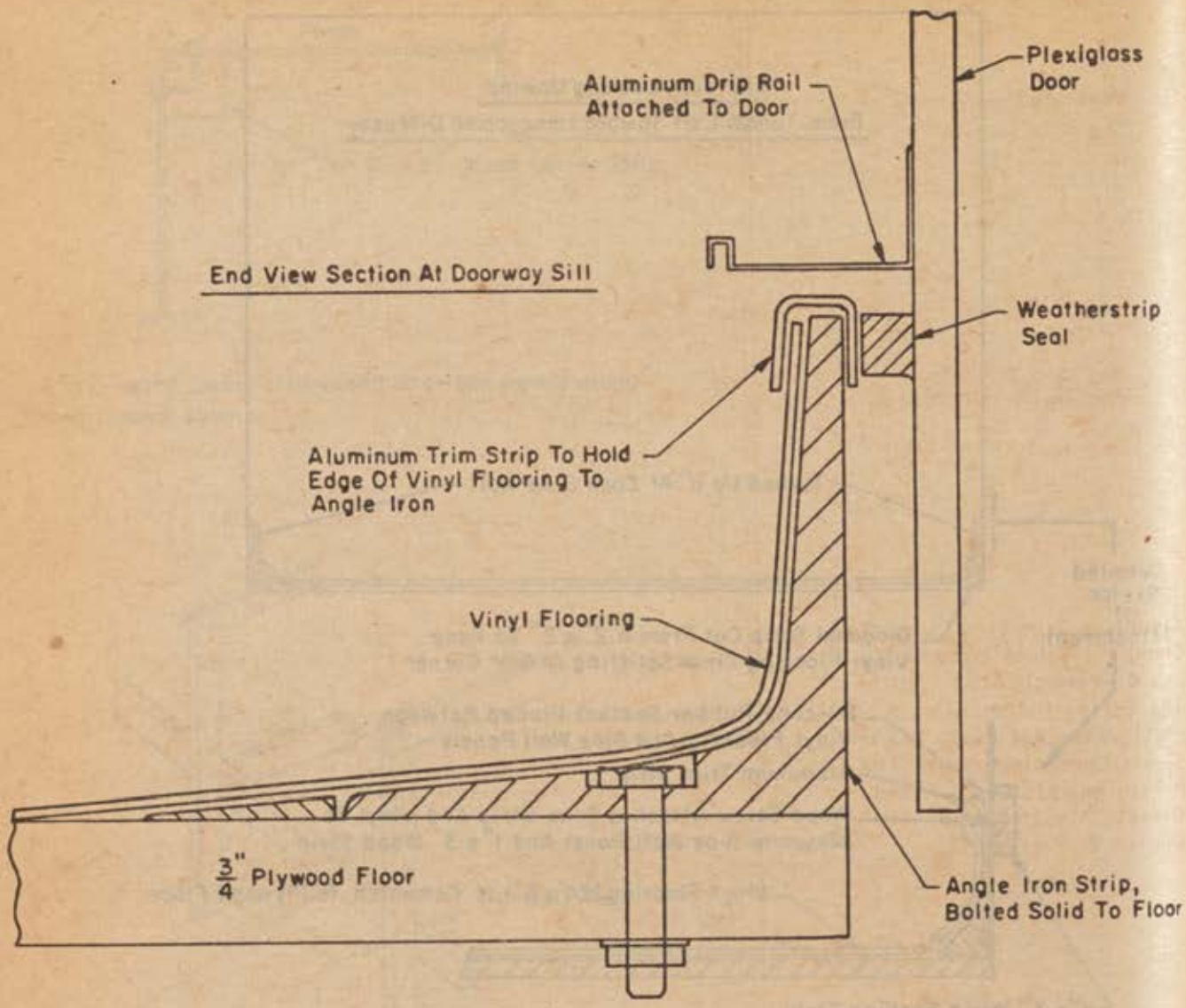

The Purpose Of The Above Construction Is To Seal Against Water Leakage At The Doorway, And Also To Provide A Solid Support (via the angle iron) For Stepping On During Entry And Exit Through Doorway.

Figure 5. Details of Vinyl Flooring and Water Drainage at Access Doorways/Sill (See Figures 7 & 8 for Details of the Access Door)

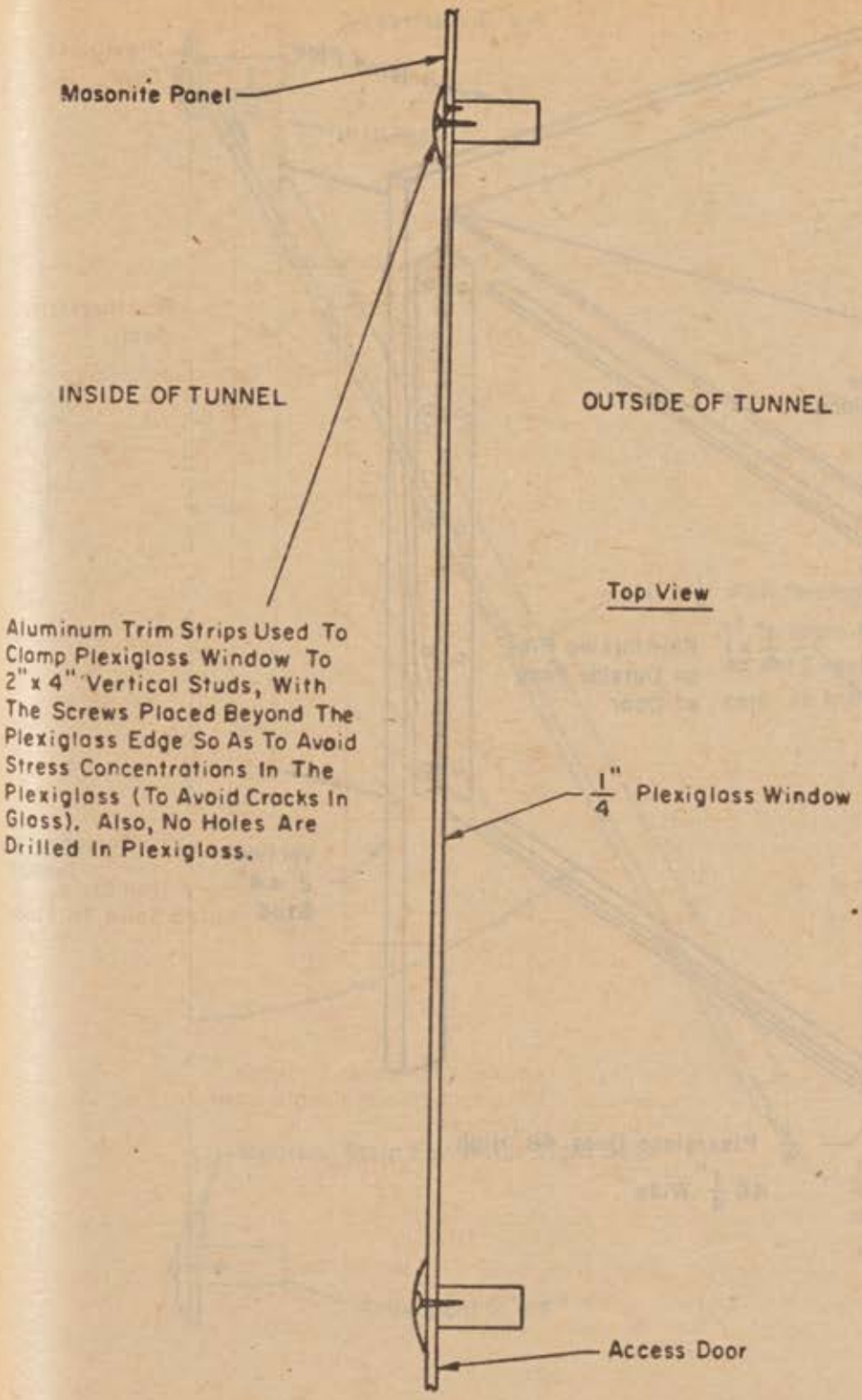

Figure 6. 48" x 48" x 1/4" Plexiglass View Window (Window is Located in the 2nd Section of the Test Section Portion of the Tunnel as Seen in Figure 1)

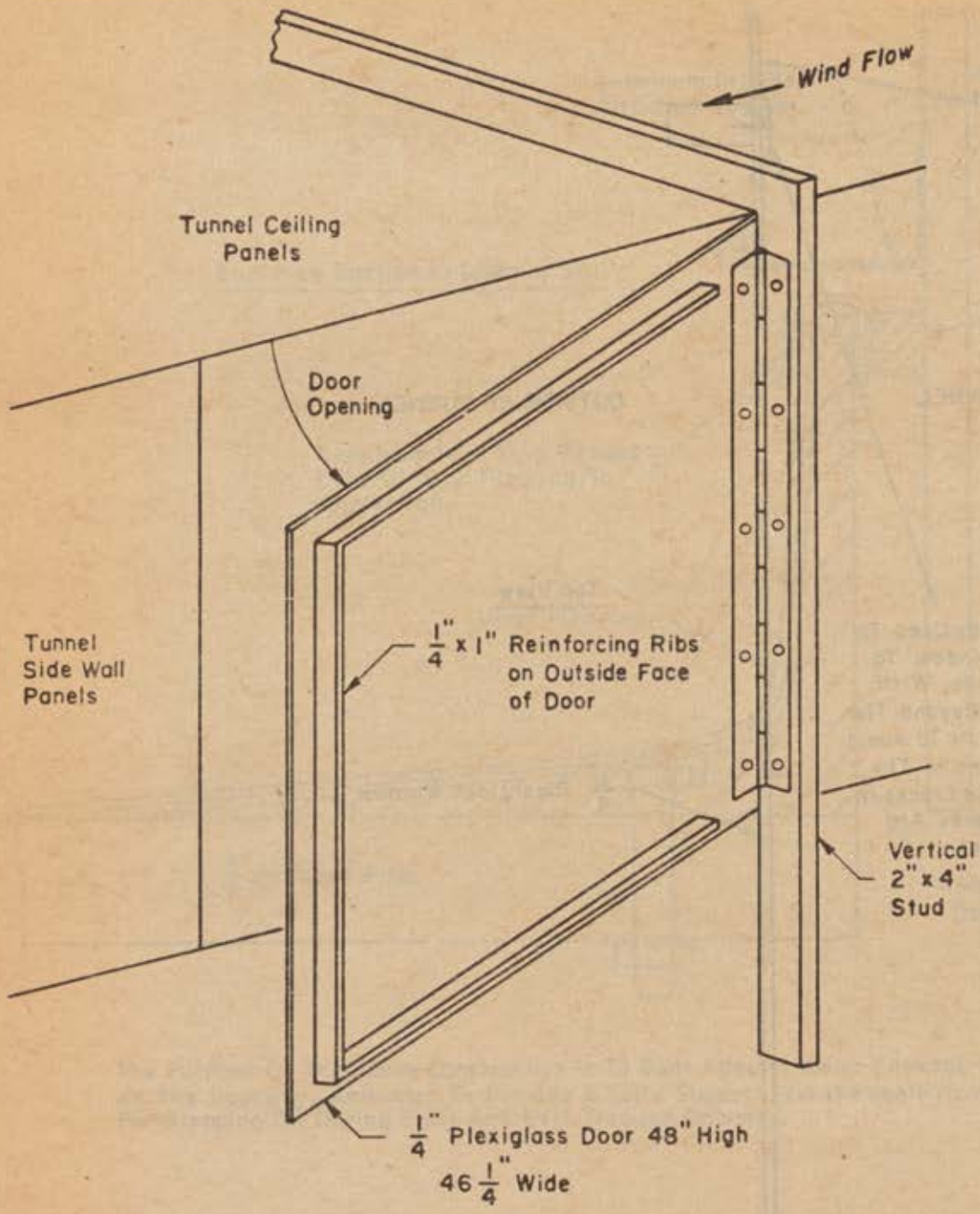

Figure 7. Access Door Details as Seen from Outside of Tunnel (Door is Located in the 3rd Section of Test Section Portion of the Tunnel as Seen in Figrue 1)

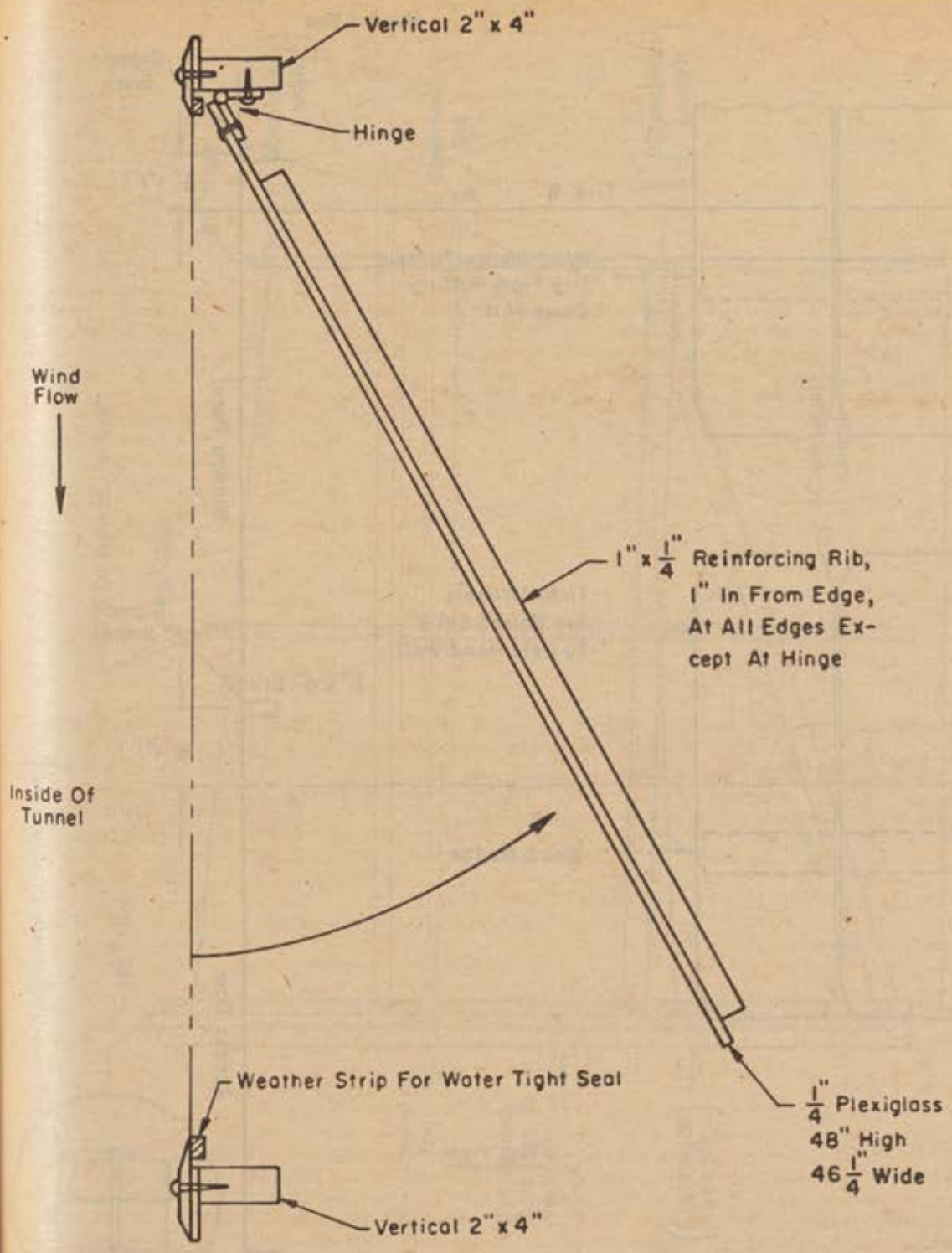

Figure 8. Top View of Access Door Details

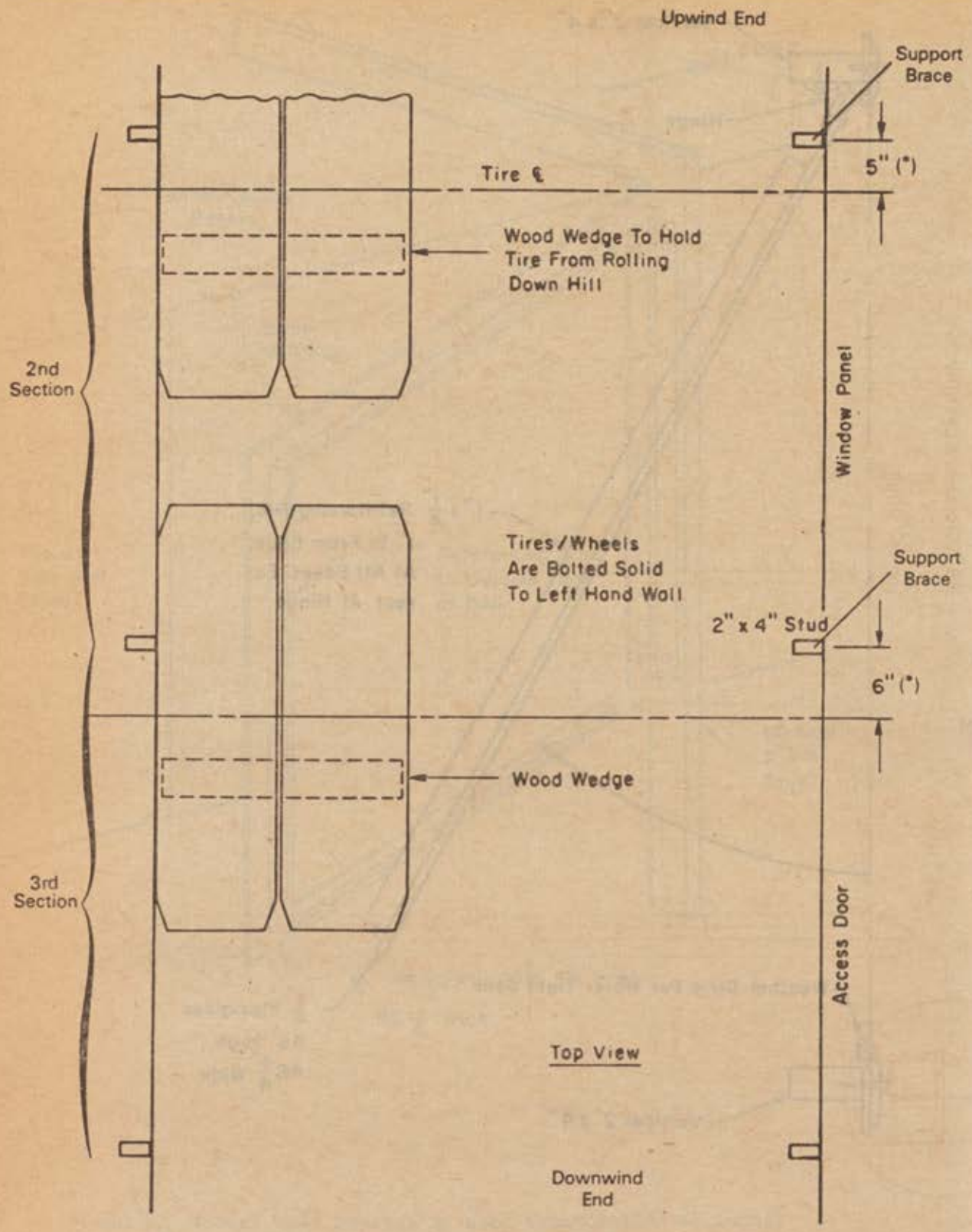

Figure 9. Tire Locations with the Test Section Portion of the Spray Tunnel

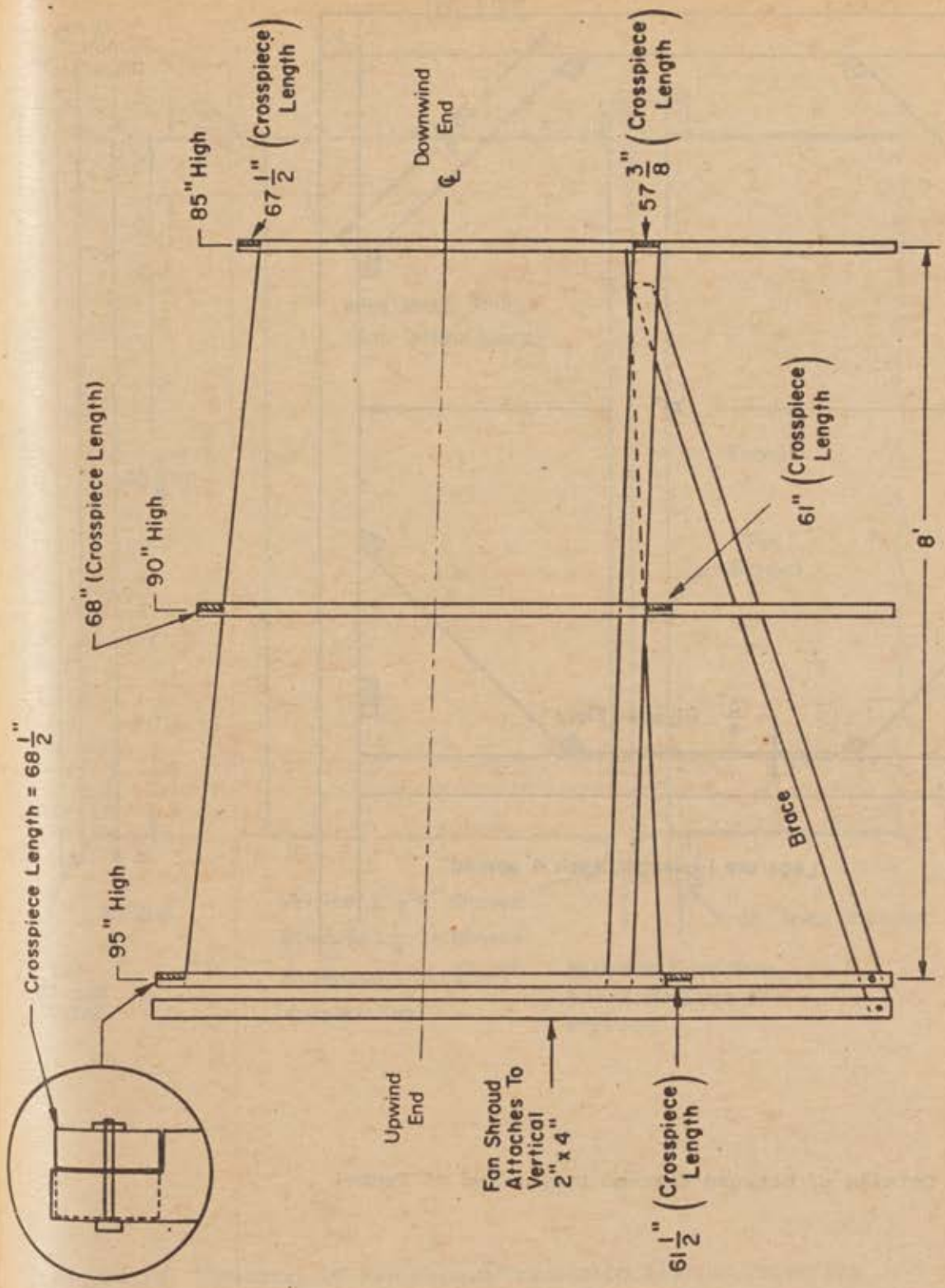

Figure 10. Side View Details of 8' Long Tunnel Transition from Octagon Shape to Rectangular Shape

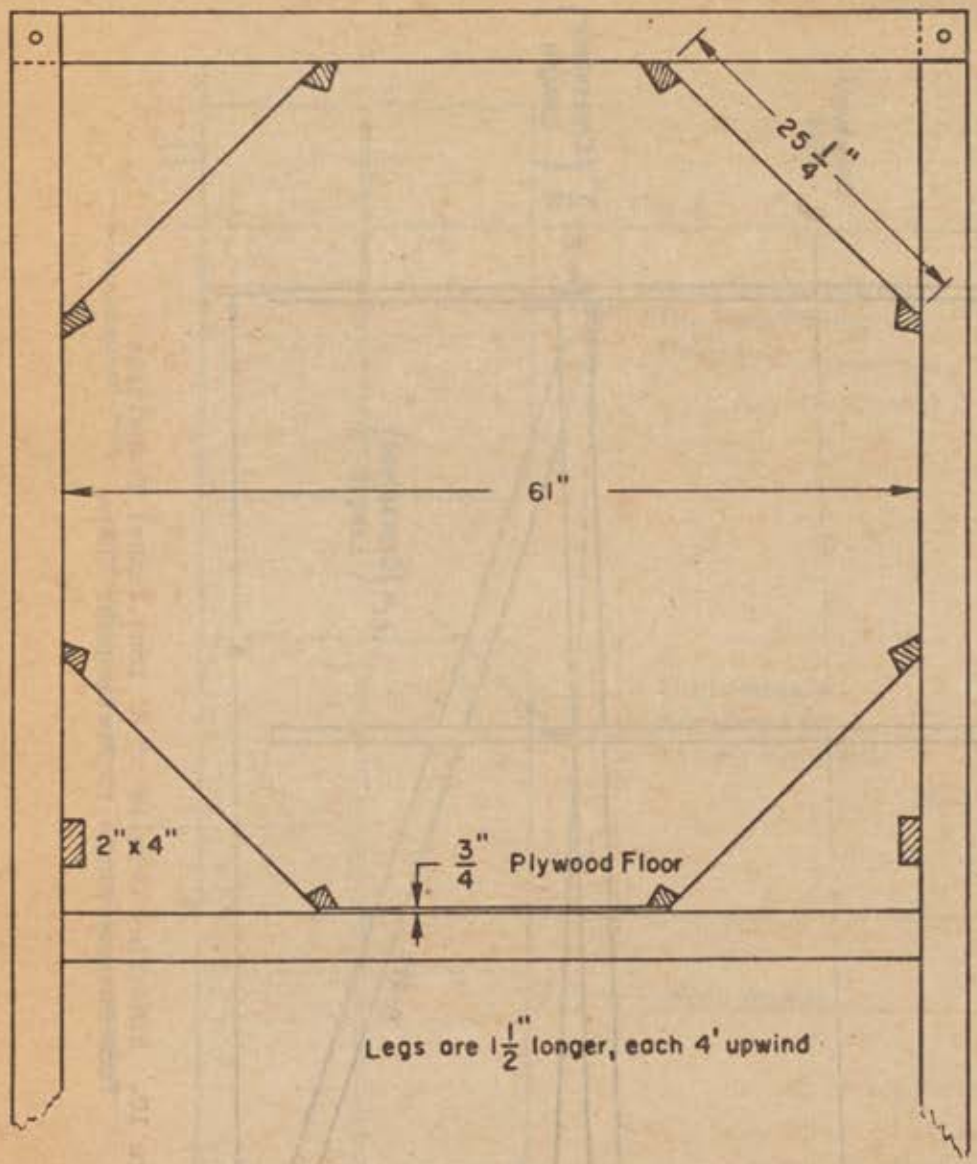

Figure 11. Details of Octagon Extreme Upwind End of Tunnel

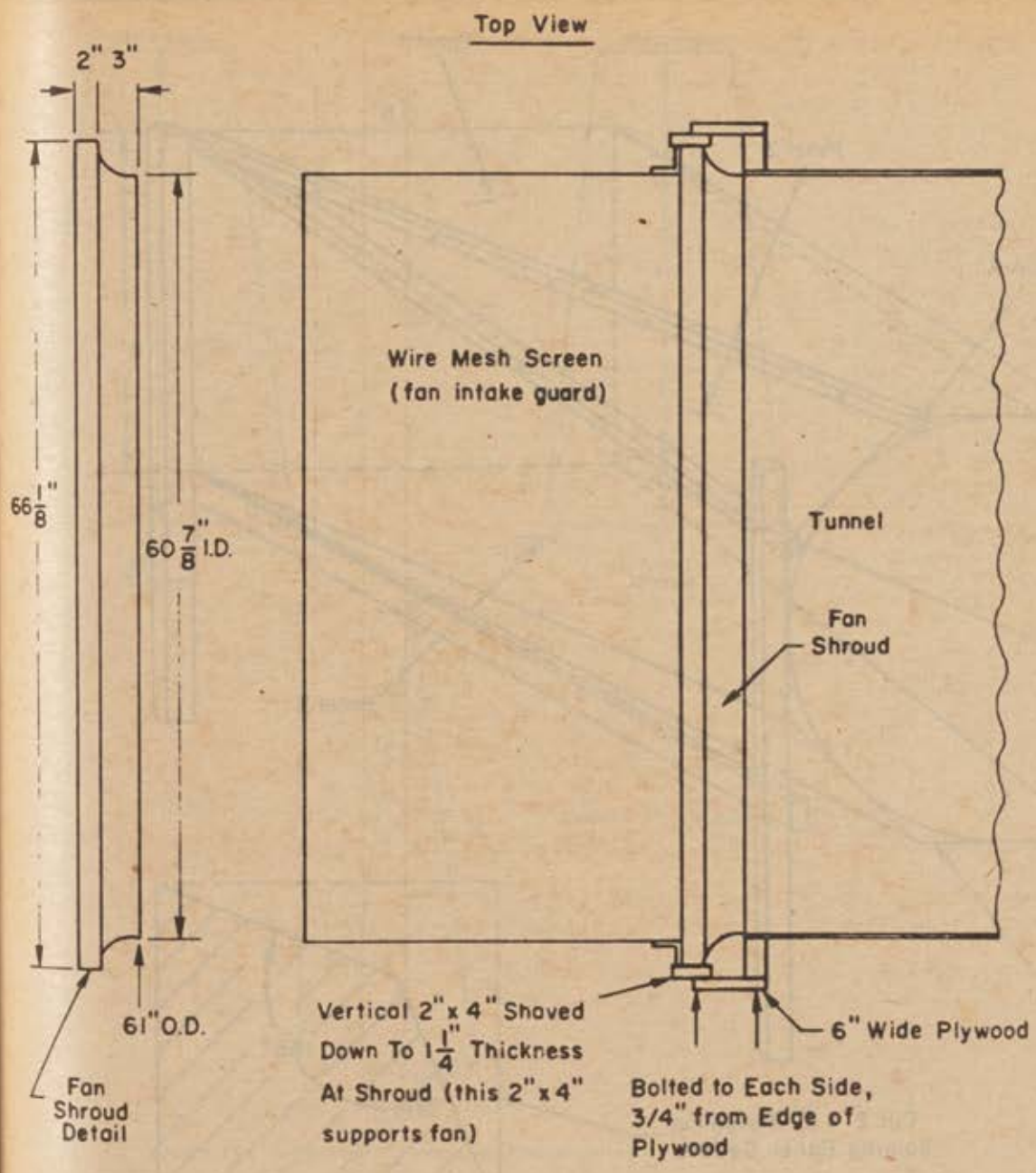

Figure 12. Geometry of Fan Shroud/Transition Section Interface

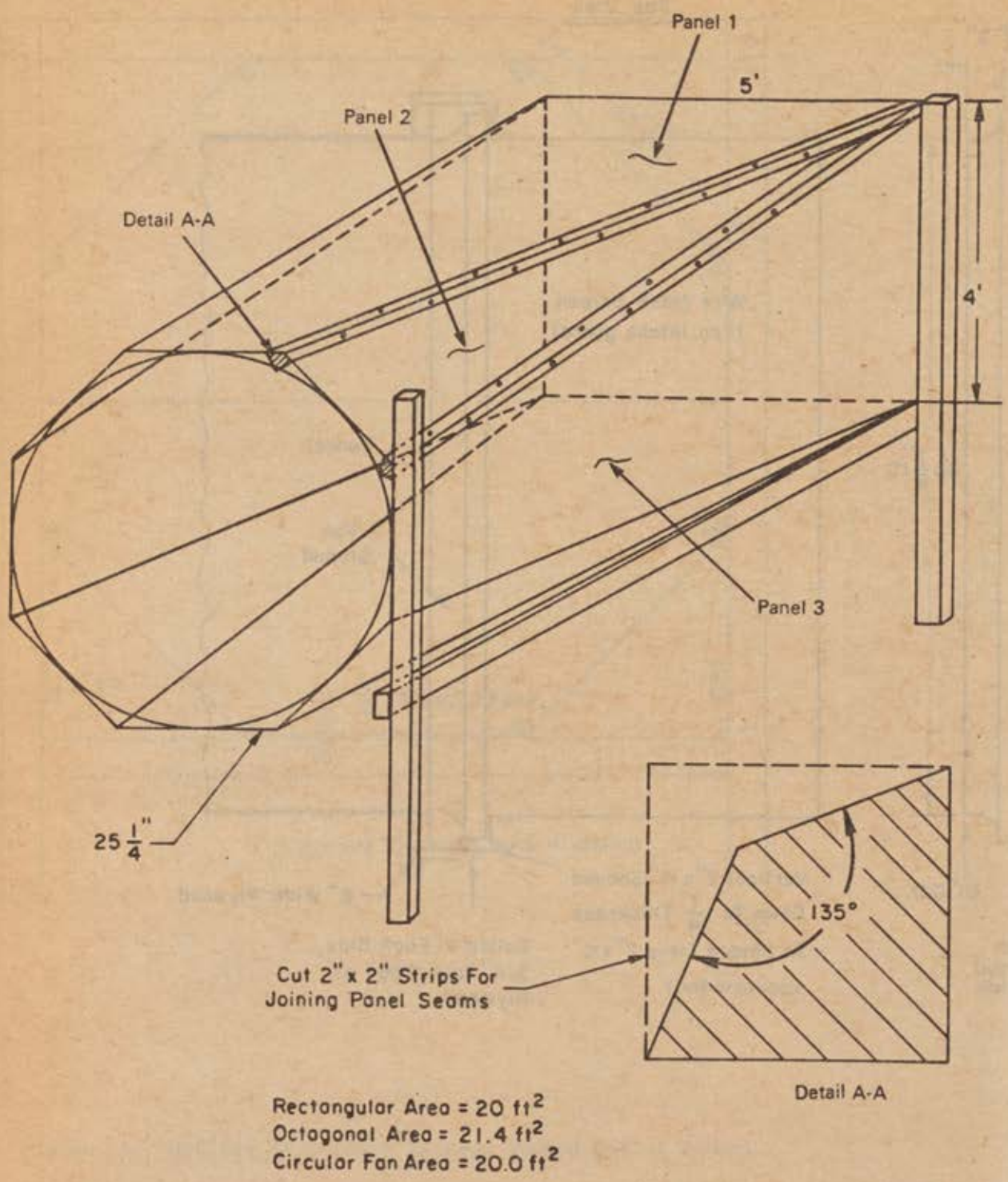

Figure 13. Panel Shapes for Transition from Circular Fan to Rectangular Tunnel (See Figure 13 for Details or Details of Panel 1, 2, & 3)

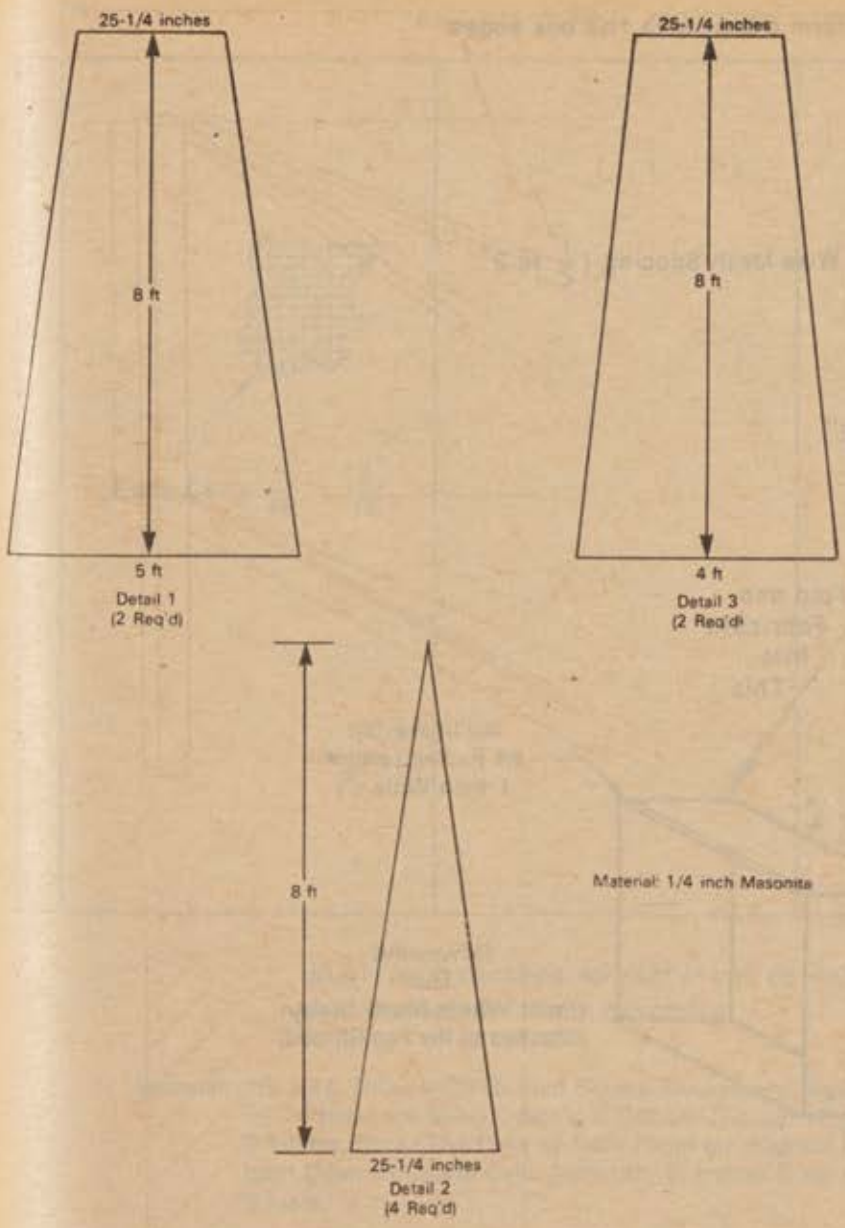

Figure 14. Transition Section Panel Design Details

A wire mesh material is folded to form a box, with the box edges wired or welded together.

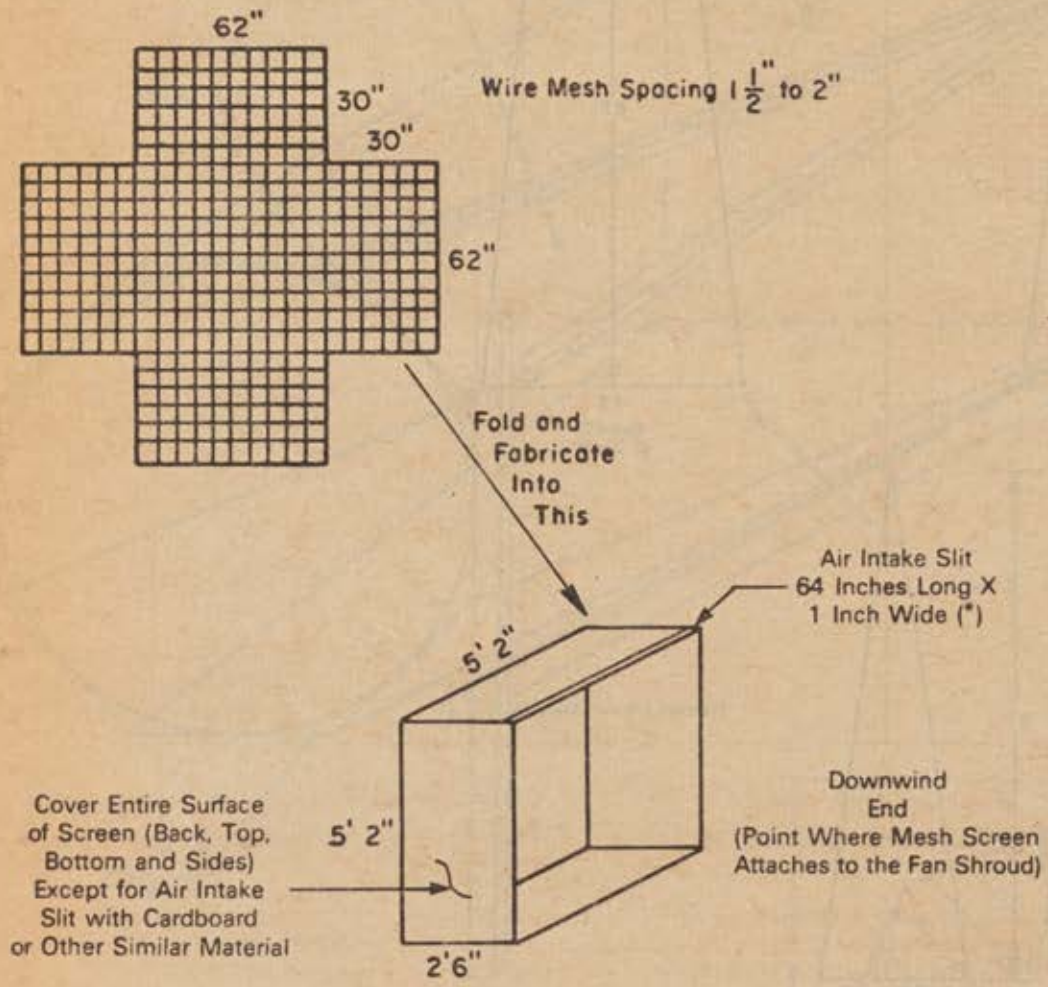

Figure 15. Fan Intake Guard & Enclosure and Air Intake Slit

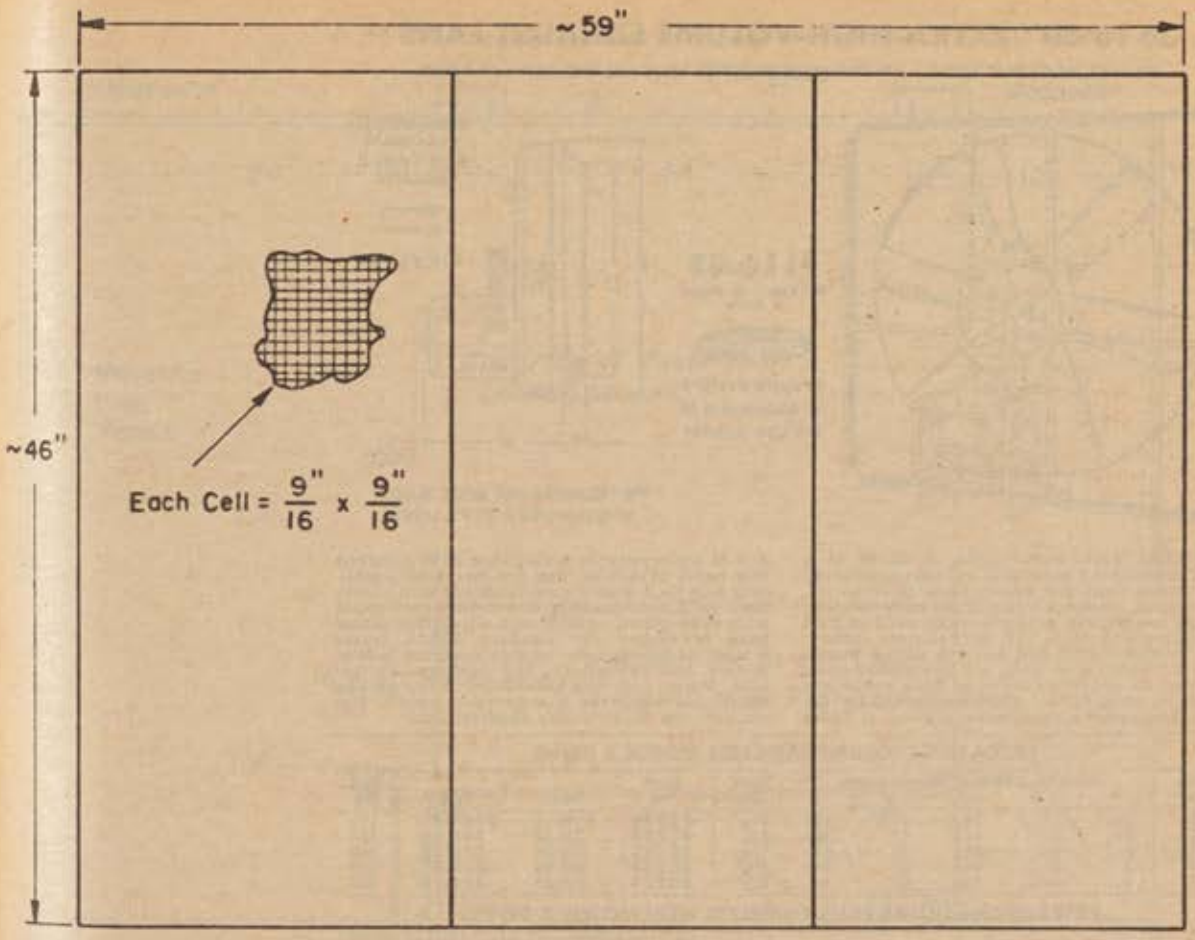

Built in 3 sections so that it can be carried into tunnel for final assembly

Material: 1/2 Inch Thick by 9/16 Inch Square Fluorescent Light Fixture Diffusers. —10 Panels are Used Creating a Diffuser Section Which is Nominally 5 Inches Thick. The Cells of Each Panel are Aligned Longitudinally With Each Other to Create Cells Nominally 5 Inches Long and 9/16 Inches Square

Figure 16. Honeycomb Diffuser and Turbulent Air Generator

36 to 60" EXTRA-HIGH-VOLUME EXHAUST FANS

Up to 63,100 CFM at 1/8" Sp. Air Deliveries Based on Standard Test Codes of AMCA

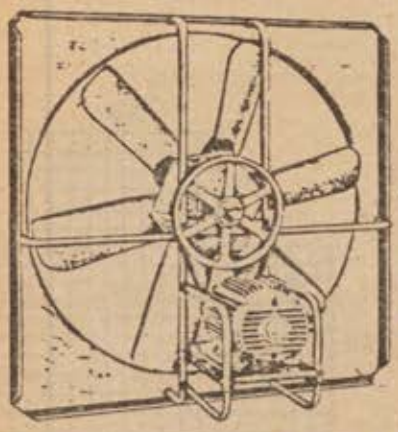

$116.85
50" Fan, Less Motor & Drive

Dayton

Prepaid Freight on Shipments of 300 Lbs. & Over

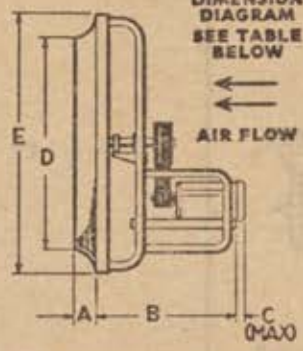

"C" DIMENSION WILL VARY WITH MOTOR TYPE USED

Heavy-duty, extra high-volume, 36, 42, 48, 54 & 60" wall-mounted industrial exhaust-ventilating fans. These fans are widely used in factories, warehouses, foundries, laundries, mine tunnels, cooling towers, etc. Also efficiently used in duct installations up to ¾" SP. Self-aligning, heavy-duty, prelubricated ball bearing pillow blocks permit mounting in wall, air duct, penthouse, etc. Fan air deliveries listed in table below are based on independent tests conducted by the Texas Engineering Experiment Station, at Texas A & M University, in accordance with standard test codes of AMCA. Fan has heavy-duty statically balanced, 6-wing steel fan blade with heavy-duty, split-taper bushing. Heavy-duty steel panel with deep-drawn venturi and adjustable motor base pre-drilled for standard NEMA frame motors of horsepower ratings specified below. Motors are heavy-duty, ball bearing, 3-phase type. Motor, cast iron sheaves and belts packed separately when fan is ordered complete. For shutter, see Index under Shutter, Fan.

EXTRA-HIGH-VOLUME FANS LESS MOTOR & DRIVE

Blade Dia.	DIMENSIONS (See diagram above) A	B	C	D	E	Shaft Dia.	Stock No.	Retail	Each	Shpg. Wt.
36"	2¾"	22⅛"	1⅝"	36¼"	42"	1⅛"	3C220	$195.15	$116.85	125
42	2¾	26⅛	⅞	43	48	1⅛	3C221	234.80	140.60	160
48	3	26	2⅛	49	54	1⅛	3C222	284.30	170.25	190
54	3	32	0	55	60	1⅛	3C223	465.65	278.85	240
60	3	34¼	2¼	61	66	1⅛	3C224	523.90	313.70	280

EXTRA-HIGH-VOLUME FANS COMPLETE WITH MOTOR & DRIVE

Blade Dia.	1/8" SP	1/4" SP	3/8" SP	1/2" SP	5/8" SP	3/4" SP	Fan RPM	HP 1725 RPM	WITH 230/460V, 60 Hz 3 PHASE MOTOR Dripproof Stock No.	Dripproof Each	TEFC Stock No.	TEFC Each
36"	13,200	11,250	8,250	3,900	2,350	—	600	1½	7F290(*)	$210.55	7F294	$217.10
	14,800	13,300	10,700	8,200	4,100	2,600	660	2	7F291(*)	217.76	7F295	224.75
	17,400	16,300	14,650	12,500	10,200	6,000	760	3	7F292	241.12	7F296	264.32
	20,600	19,800	18,800	17,400	15,200	13,600	890	5	7F293	253.76	7F297	283.92
42	17,900	16,200	13,000	10,900	8,100	6,600	565	2	7F298(*)	240.20	7F302	247.19
	20,700	19,600	17,600	14,400	11,800	9,900	645	3	7F299	261.84	7F303	285.04
	24,900	24,100	23,000	21,400	18,900	16,100	765	5	7F300	282.02	7F304	312.18
	28,700	28,100	27,300	26,300	24,800	22,600	875	7½	7F301	337.64	7F305	368.96
48	25,400	24,200	21,700	15,600	9,800	—	535	3	7F306	301.37	7F310	324.57
	29,800	28,400	27,000	23,200	21,600	15,000	625	5	7F307	317.73	7F311	347.89
	34,500	33,500	32,300	31,100	29,700	27,700	720	7½	7F308	380.19	7F312	411.51
	38,300	37,200	36,000	34,600	32,800	30,600	795	10	7F309	414.53	7F313	451.65
54	33,500	31,400	28,400	21,500	14,400	10,300	495	5	7F314	446.28	7F318	476.44
	38,400	36,900	34,500	32,100	26,400	19,100	565	7½	7F315	495.43	7F319	526.75
	43,100	41,400	39,600	37,500	34,900	29,000	620	10	7F316	527.67	7F320	564.79
	49,600	48,300	46,300	44,100	43,300	40,600	710	15	7F317	597.75	7F321	647.63
60	46,400	44,100	41,400	37,500	30,500	19,600	505	7½	7F322	536.88	7F326	568.20
	51,000	48,500	46,300	43,400	39,000	32,800	550	10	7F323	568.97	7F327	606.09
	59,200	57,400	56,000	53,400	50,900	48,200	635	15	7F324	645.17	7F328	695.05
	63,100	61,600	60,000	58,200	56,100	53,700	675	20	7F325	707.49	7F329	770.13

(*) 208-220/440V, 60 Hz.

AIR MOVING EQUIPMENT FUNDAMENTALS—SEE PAGES 556 AND 557

Includes Equipment Description, Characteristics and Glossary of Terminology

60" Blade Diameter

$7\frac{1}{2}$ HP Motor

Figure 17. Fan and Motor Used in Tunnel

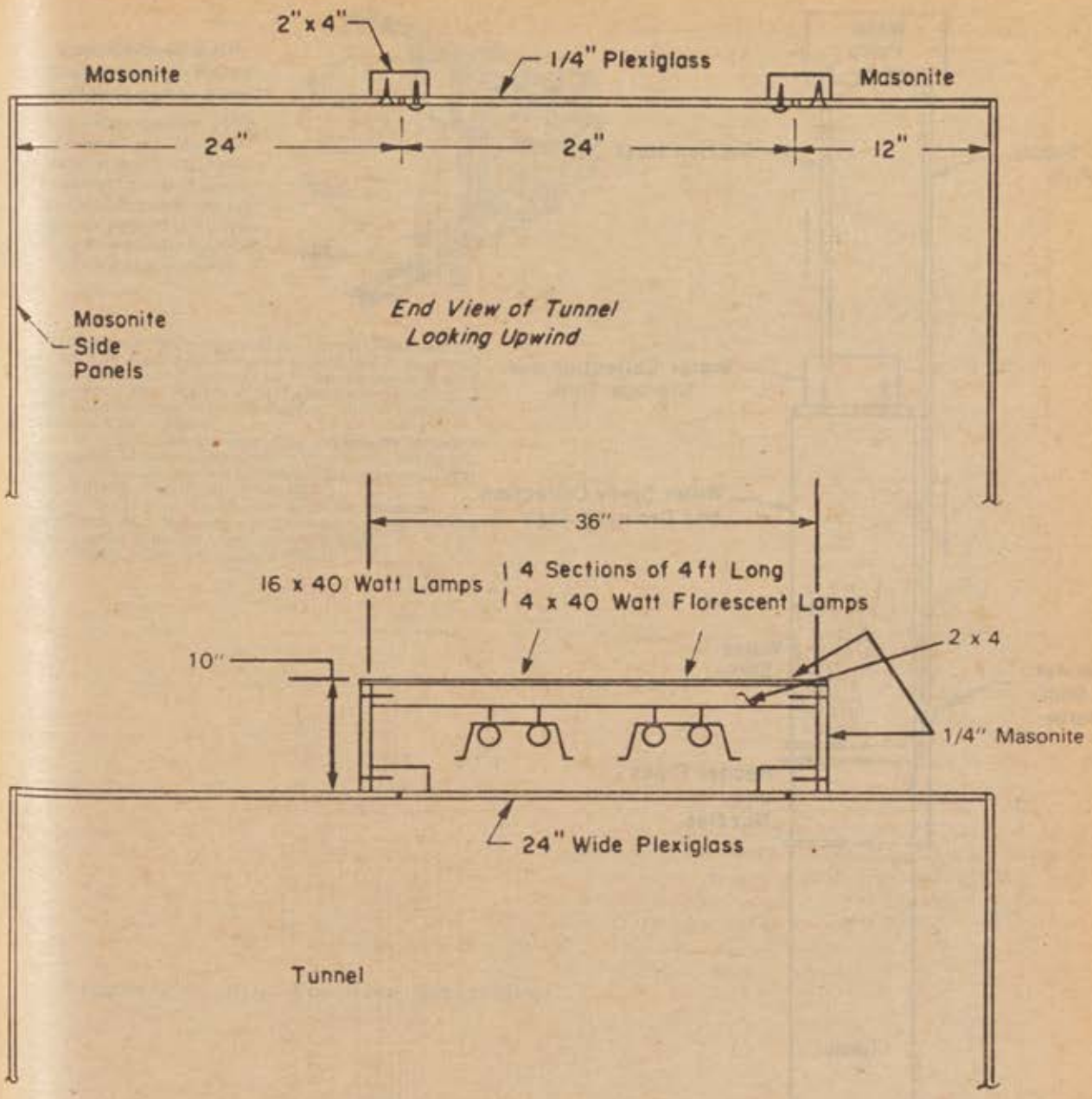

Figure 18. Overhead Lighting Installation

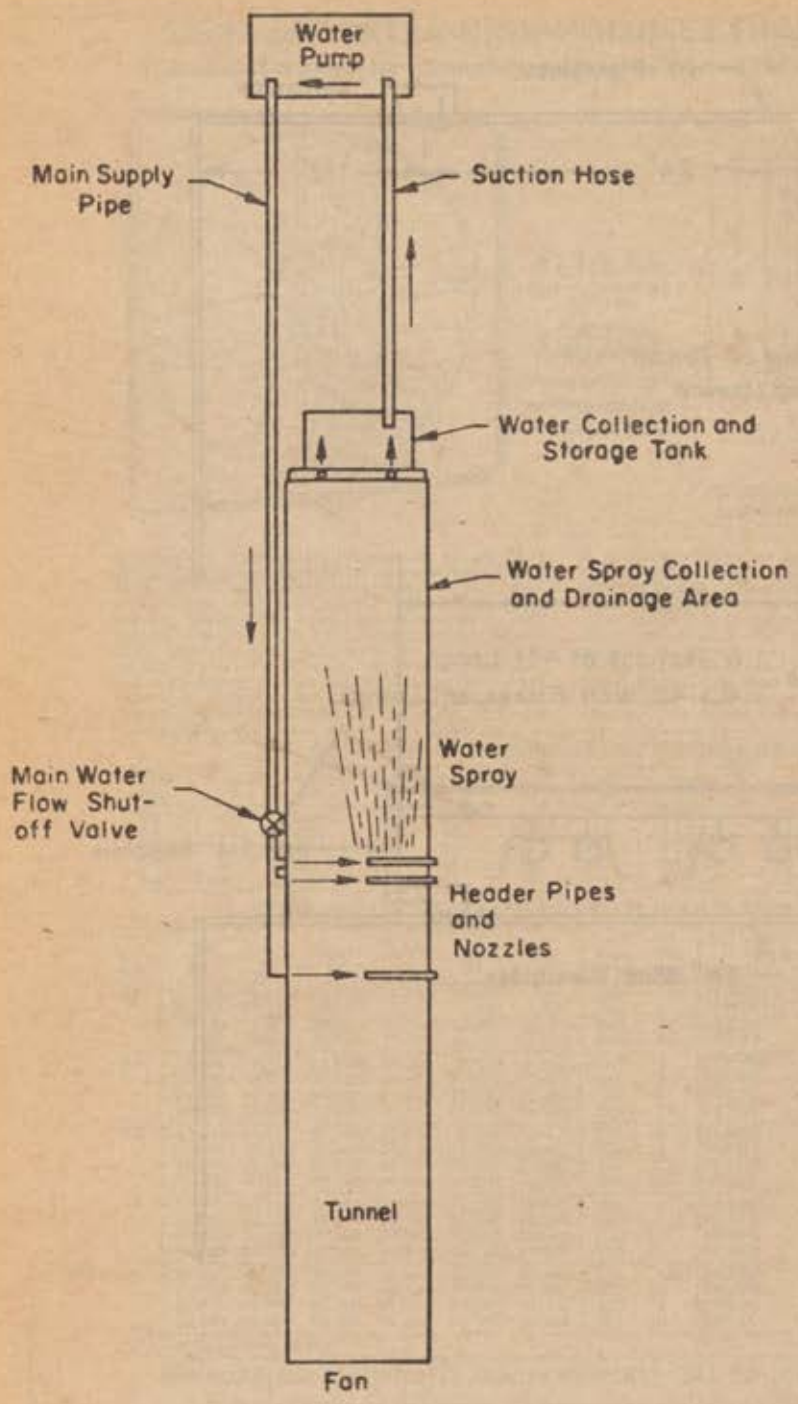

Figure 19. General Layout of Recirculating Water Flow System

Gas-powered 5-HP High-pressure Pump includes gas engine

Heavy-duty portable pump delivers huge volume of water at high pressure for irrigation, lawn and garden sprinkling, dewatering, etc. Ideal for fighting small fires, too, to help protect buildings, stock and equipment

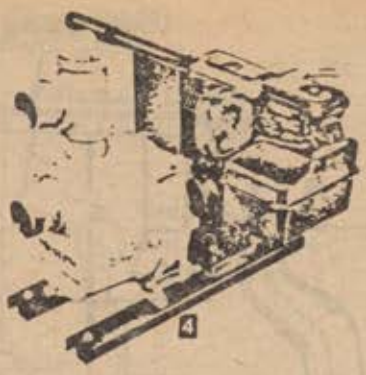

PERFORMANCE Delivers up to 60 lbs. pressure. Maximum suction lift 20 ft. *Typical performance at 10-ft. lift:* 65 gallons per minute (GPM) at 20-lb. pressure for dewatering (draining flooded basements, etc.); 58 GPM at 30-lb. pressure for sprinkling; 26 GPM at 55-lb. pressure for fire-fighting. Ideal for use where electricity is not available.

CONSTRUCTION Cast aluminum alloy. Replaceable cast iron at wear points. Semi-open, self-cleaning impeller will handle even muddy, dirty water. 1½-inch suction and discharge ports. Overall dimensions: 20½x18½x17 inches high.

ENGINE Direct-drive, 4-cycle. 3600-RPM. Recoil starter.

ORDERING INFO See warranty (T) on facing page. For fire-fighting, order Hose and Fog Nozzle (5) at right.

4 > KF 2640L—Shipping weight 70 pounds.....

Figure 20. High Pressure Water Pump

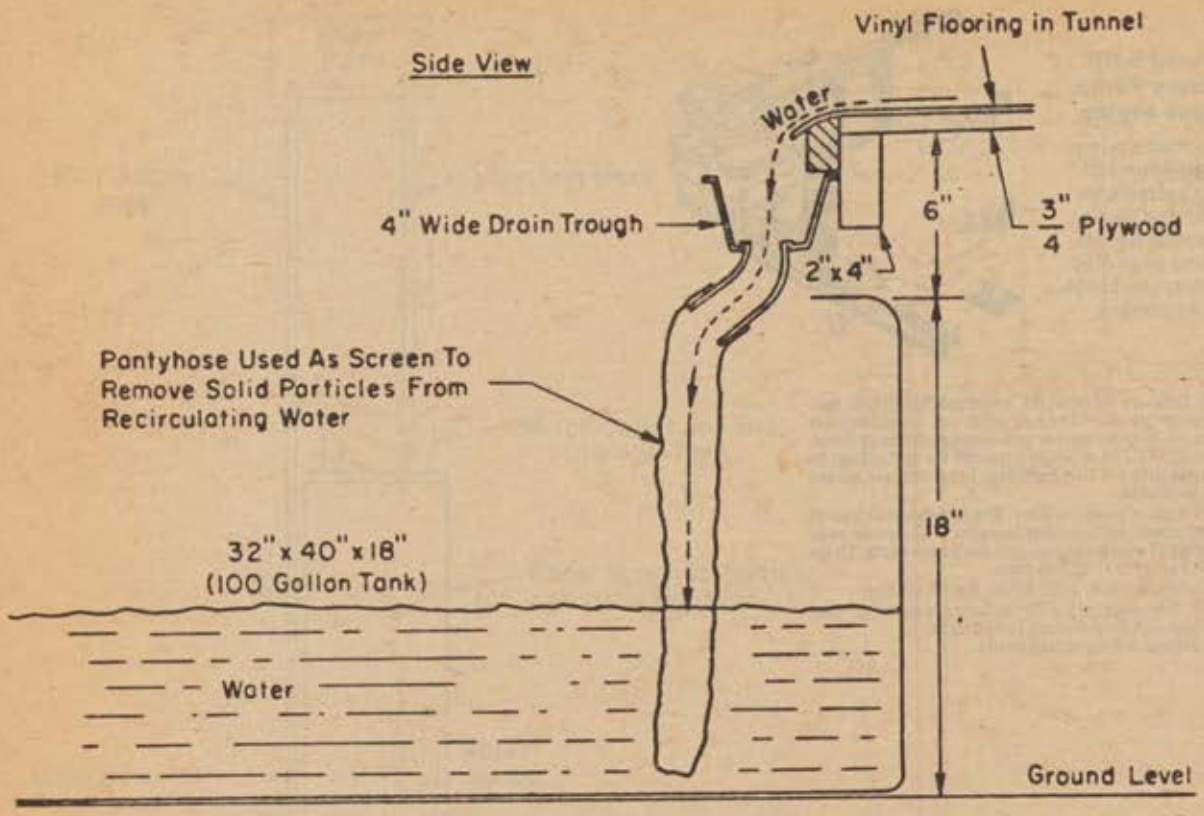

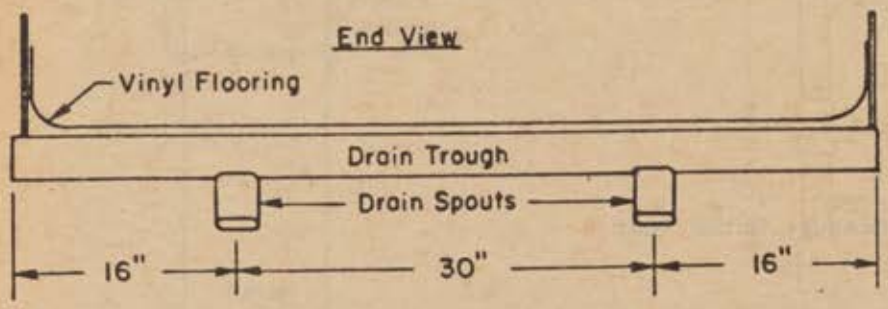

Figure 21. Collection of Water in Reservoir at End of Tunnel

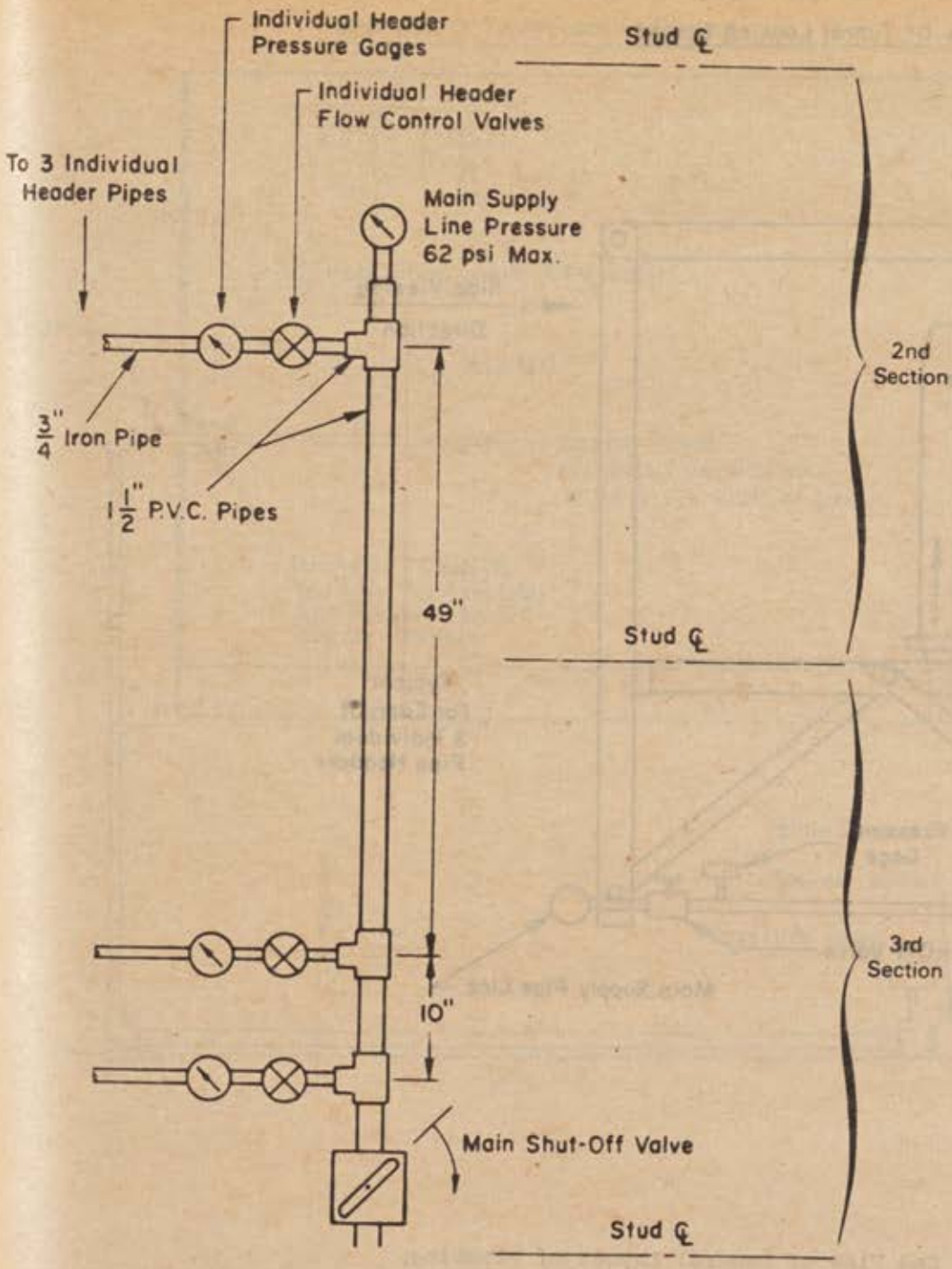

Figure 22. Top View Details of Main Water Supply Pipe, Valves, and Pressure Gages

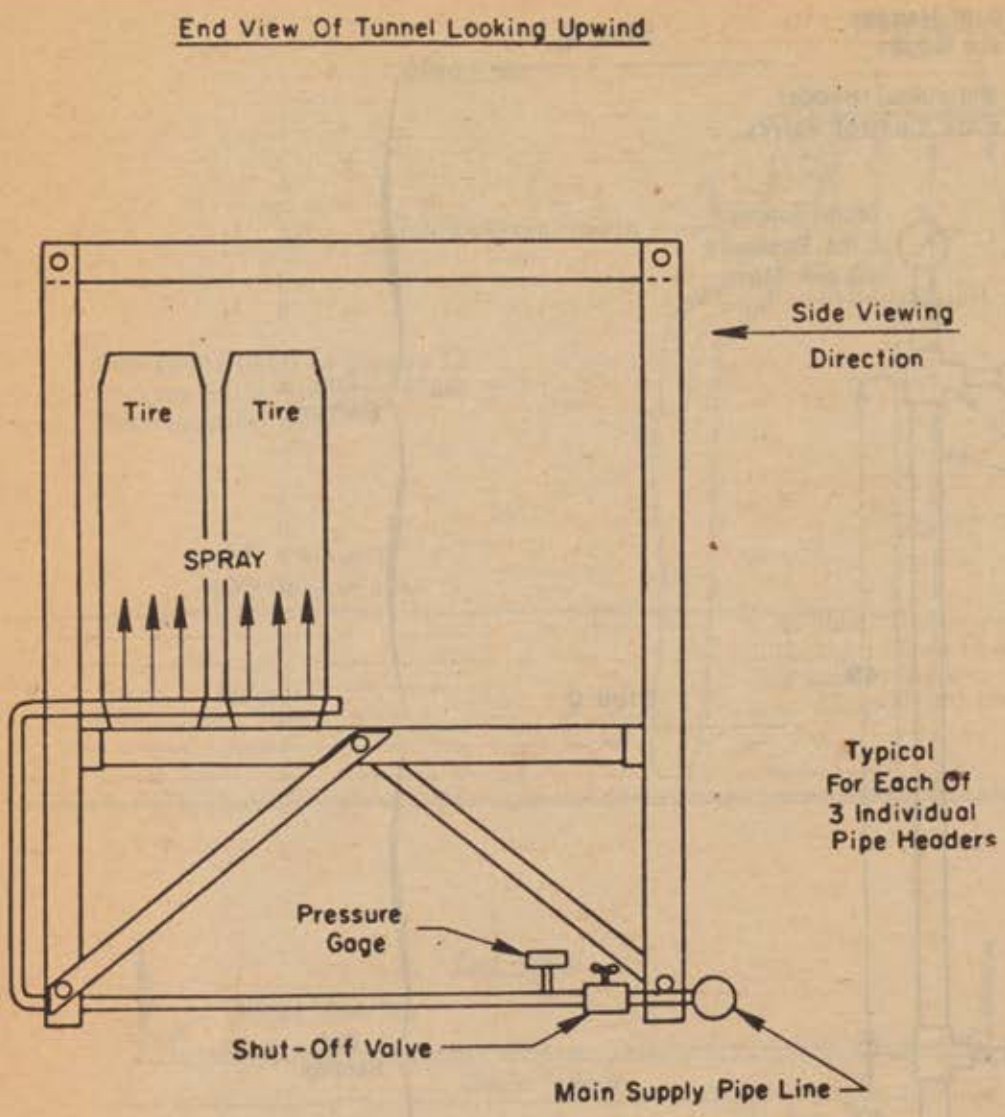

Figure 23. End View of General Layout of Plumbing

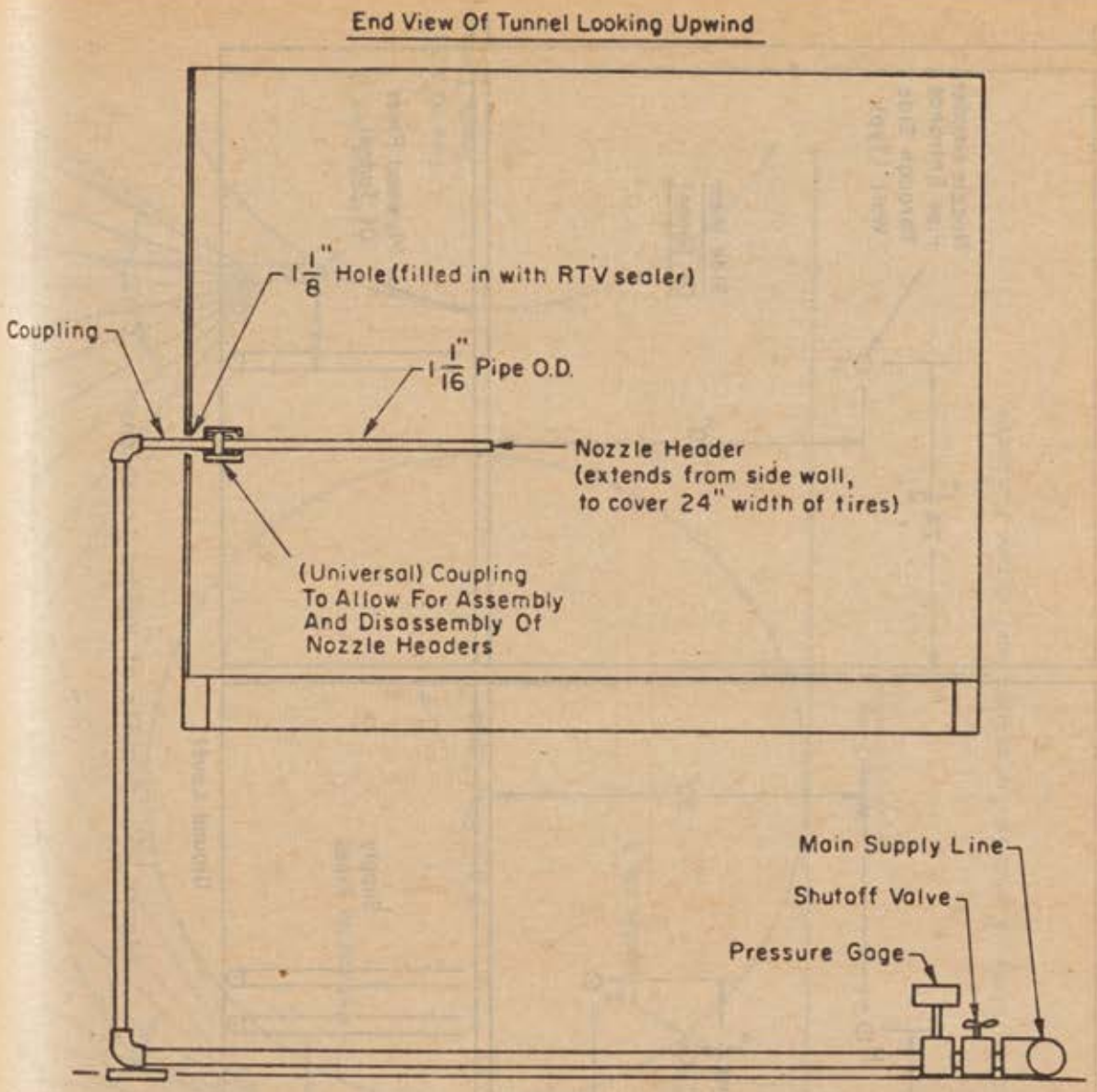

Figure 24. End View Details of Typical Plumbing Layout from Main Supply Line to Nozzle Header

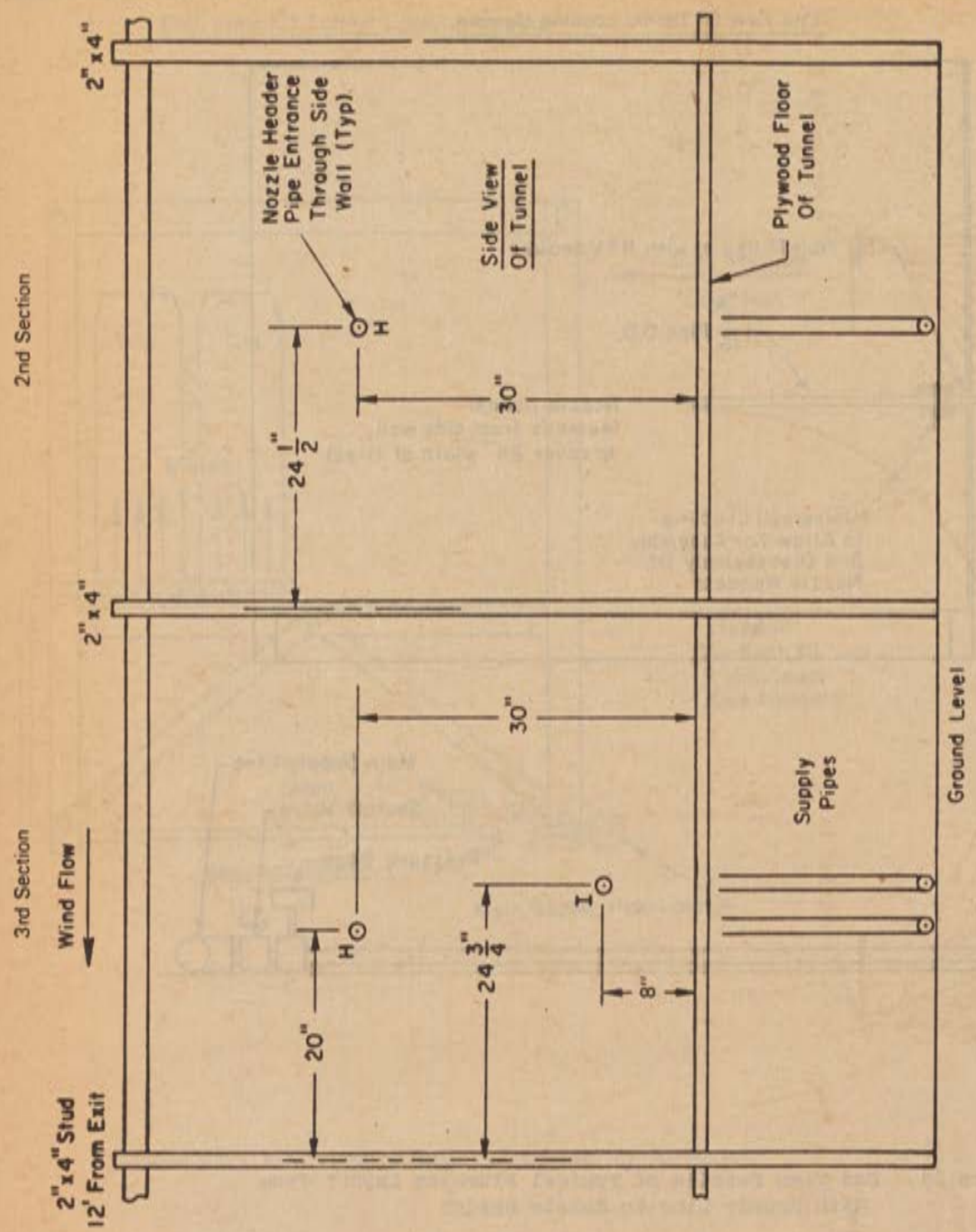

Figure 25. Details of Header Locations

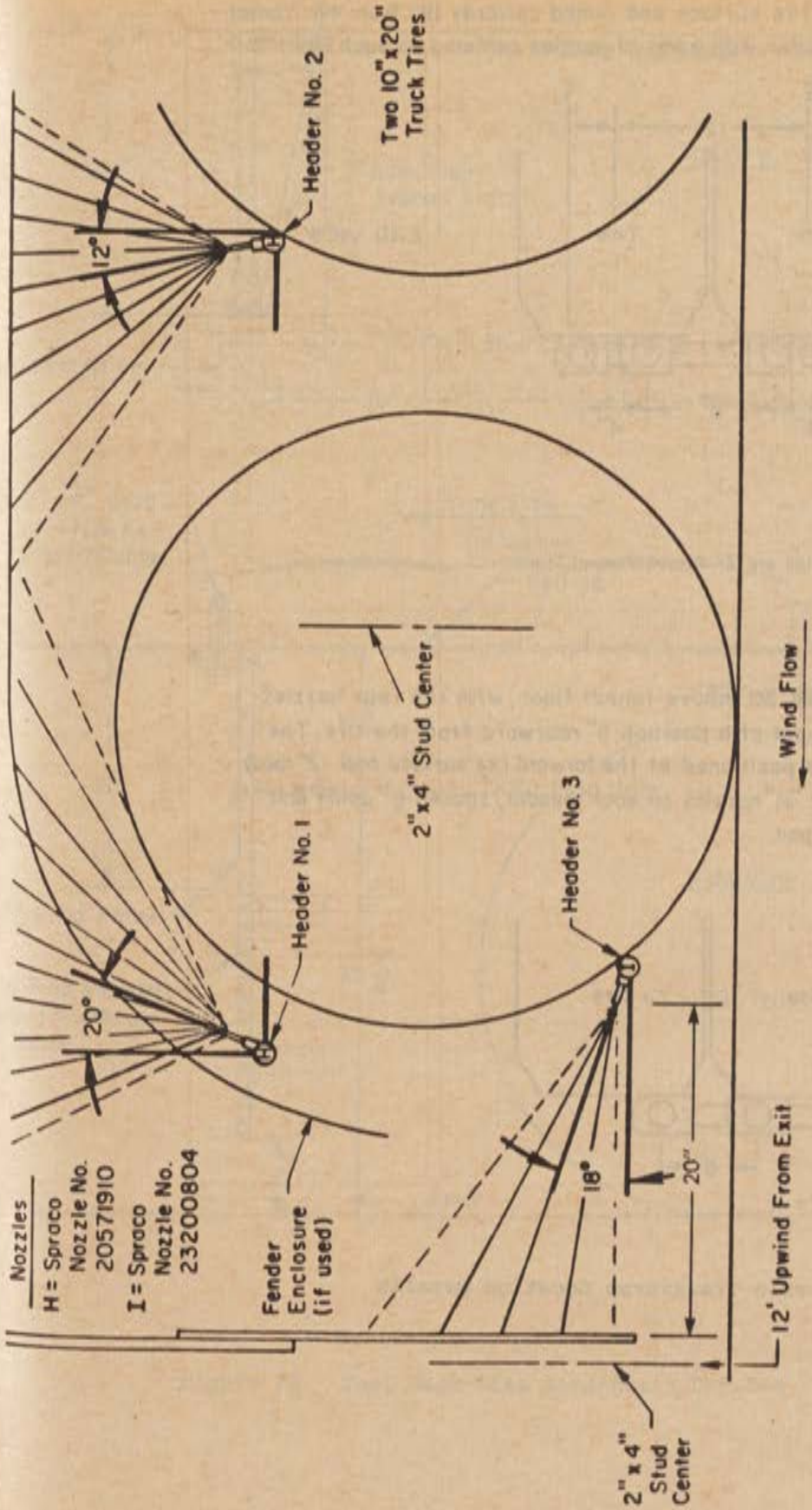

Figure 26. Side View of Nozzle Locations and Spray Patterns

"I" Nozzles - positioned at tire surface and aimed upwards 18° from horizontal. There a 4 nozzles on the header, with a pair of nozzles centered on each tire.

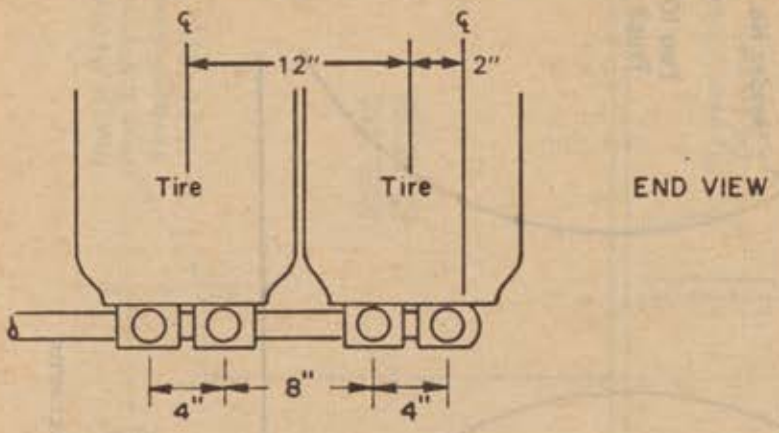

"I" Nozzles are 7" Above Tunnel Floor

"H" Nozzles - are positioned 30" above tunnel floor, with the rear nozzles aimed 20° forward from vertical at a position 5" rearward from the tire. The nozzles between the tires are positioned at the forward tire surface and 12° away from vertical (Aft). There are 2 "H" nozzles on each header, spaced 6" apart and and centered between the tire pair.

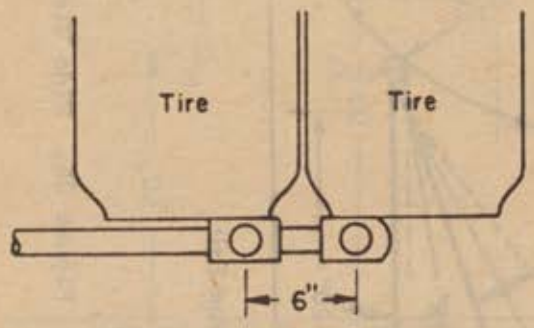

Figure 27. Nozzle Transverse Location Details

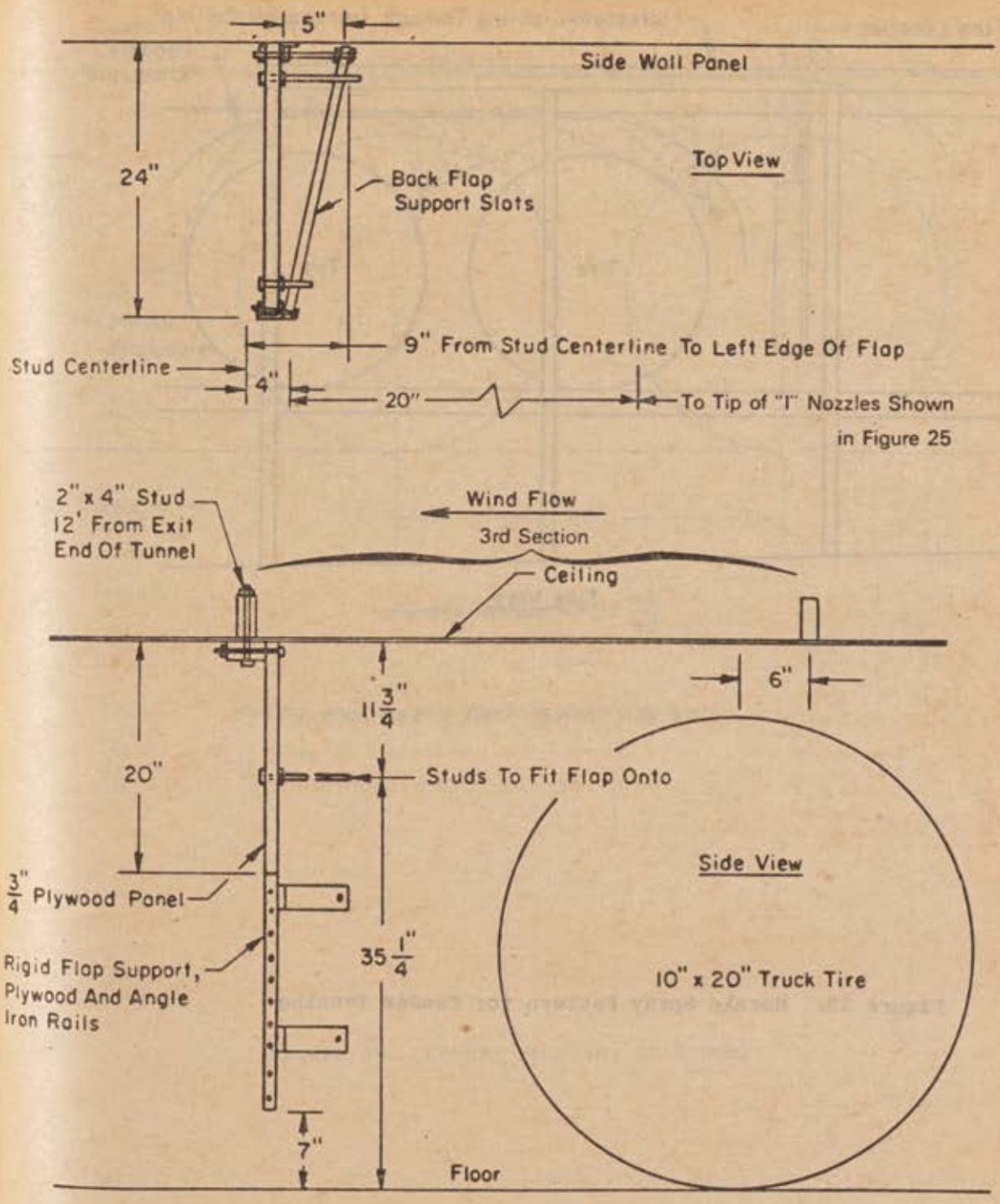

Figure 28. Test Back Flap Attachment Details

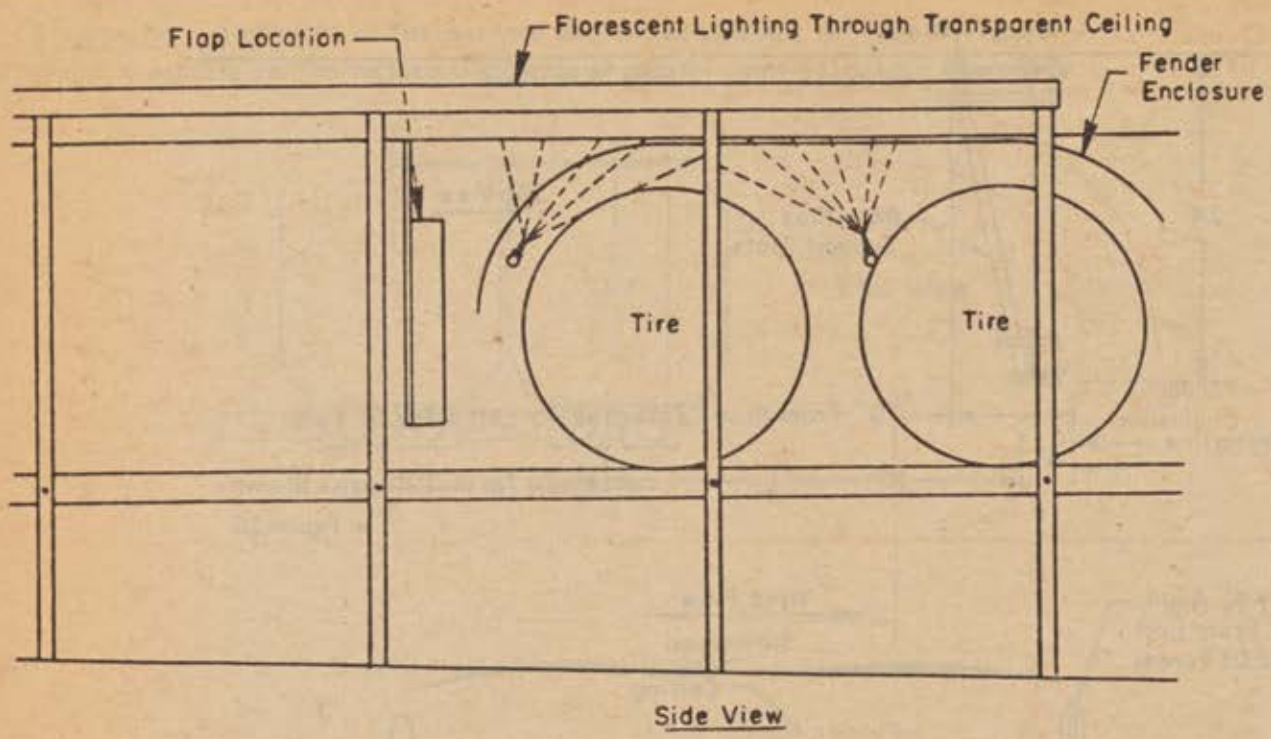

Figure 29. Nozzle Spray Pattern for Fender Testing

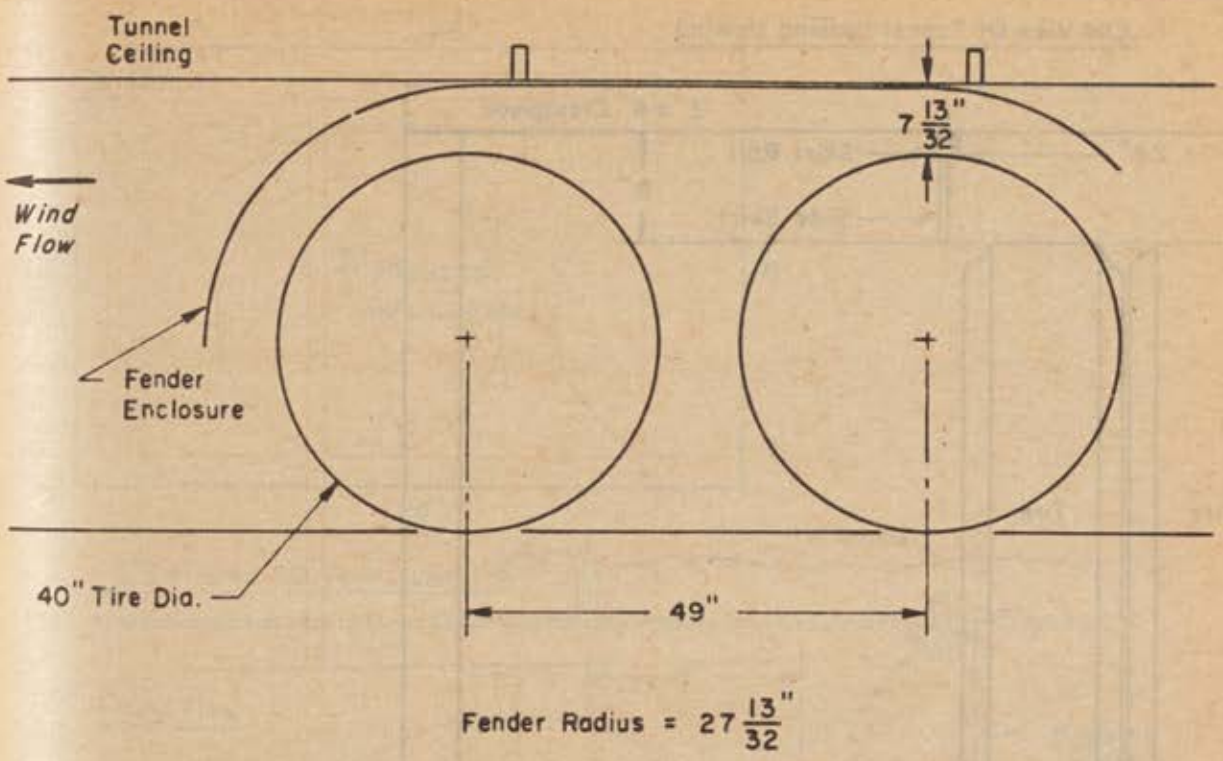

Fender enclosure is flush against side wall

Figure 30. Fender Mounting in Tunnel

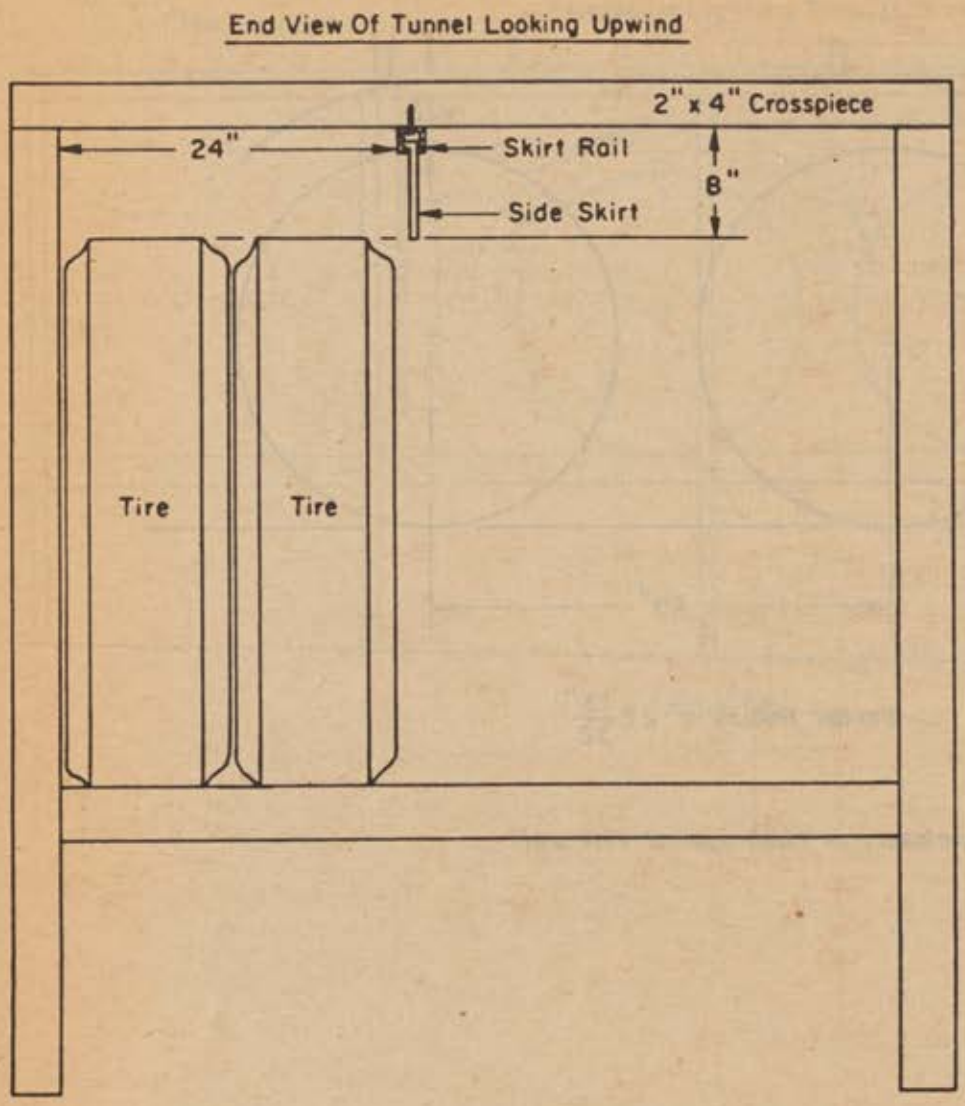

Figure 31. Details of Side Skirt Attachment

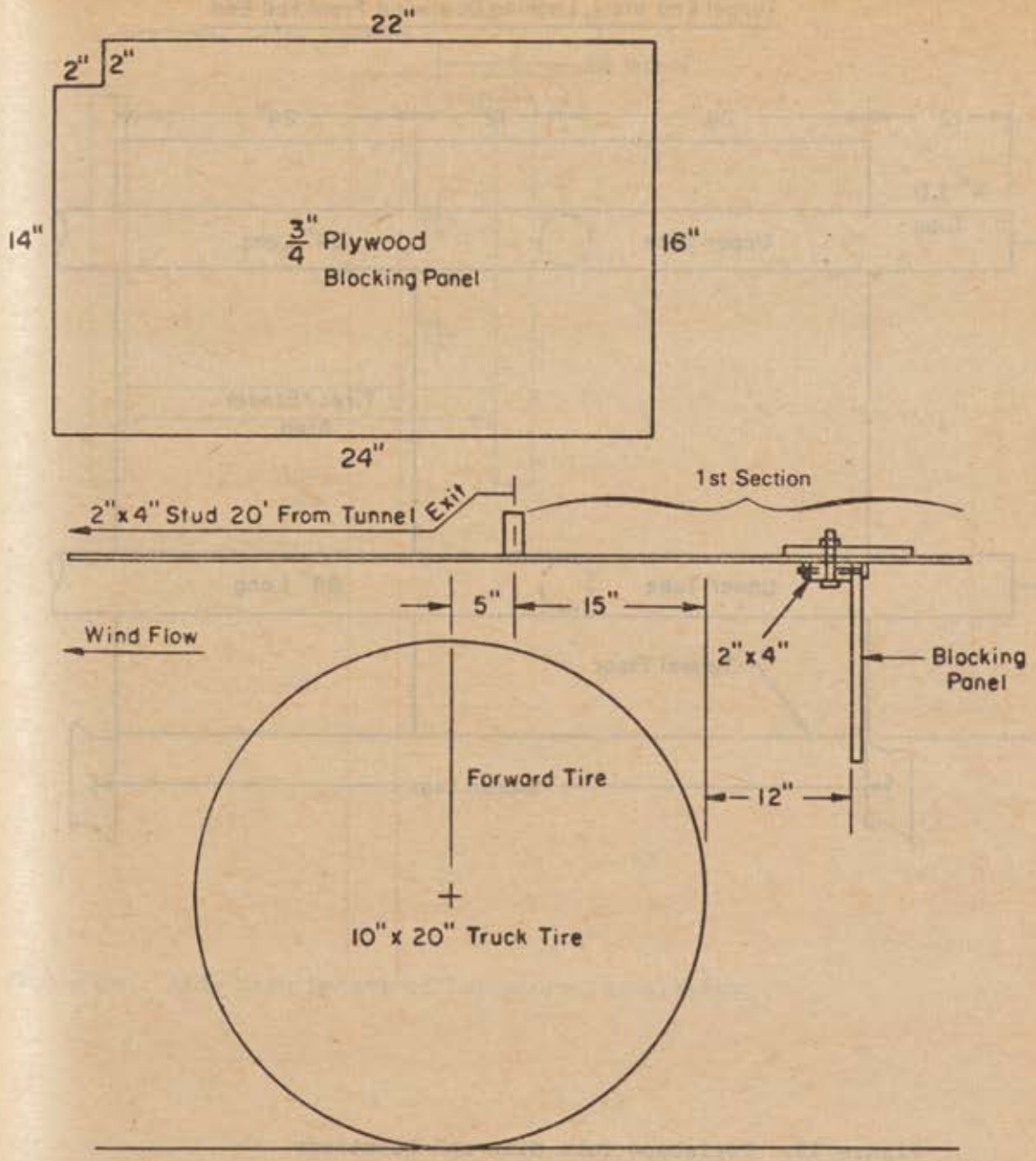

Figure 32. Air Flow Blocking Panel

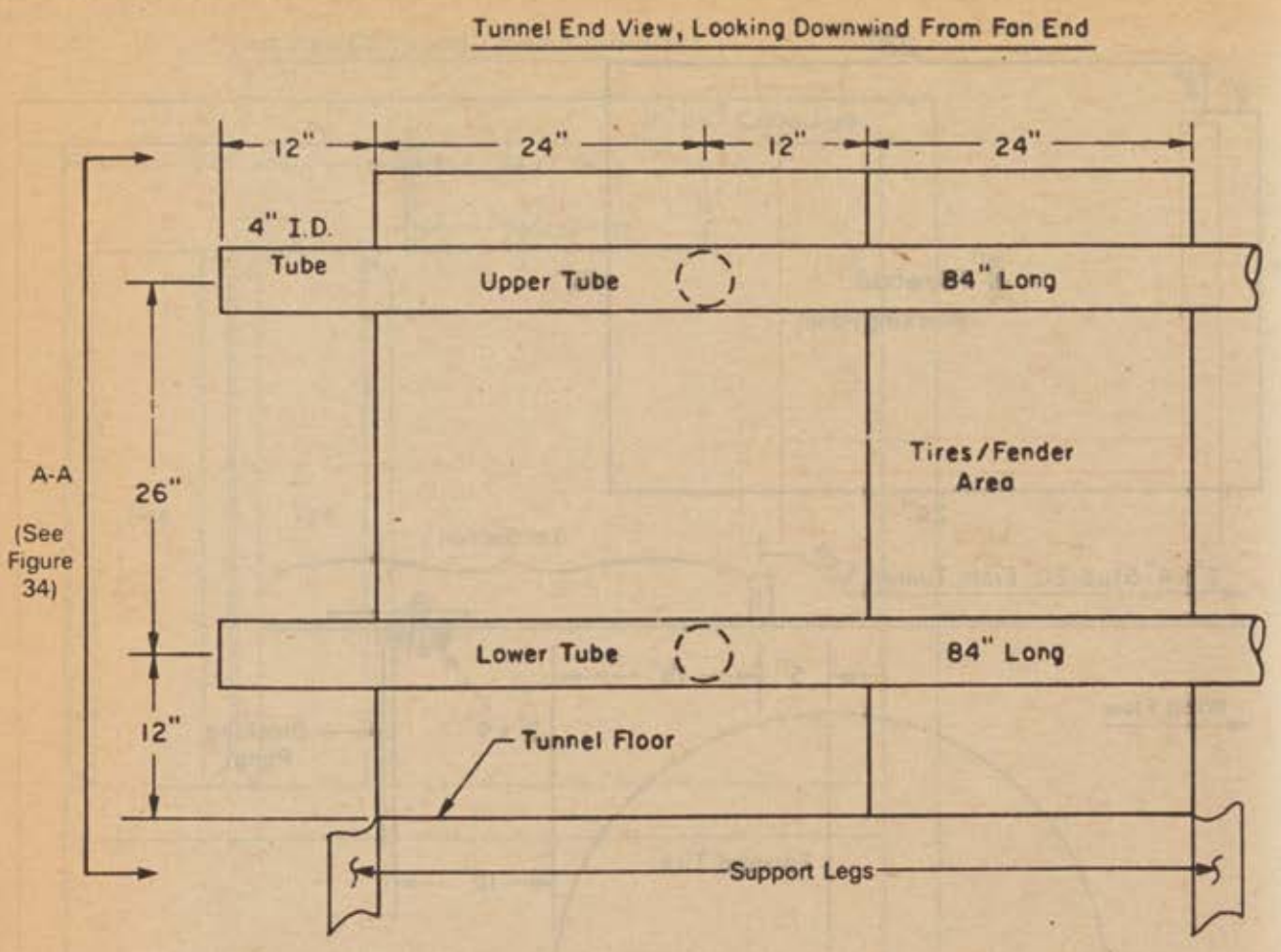

Figure 33. Periscope Tube Size and Locations

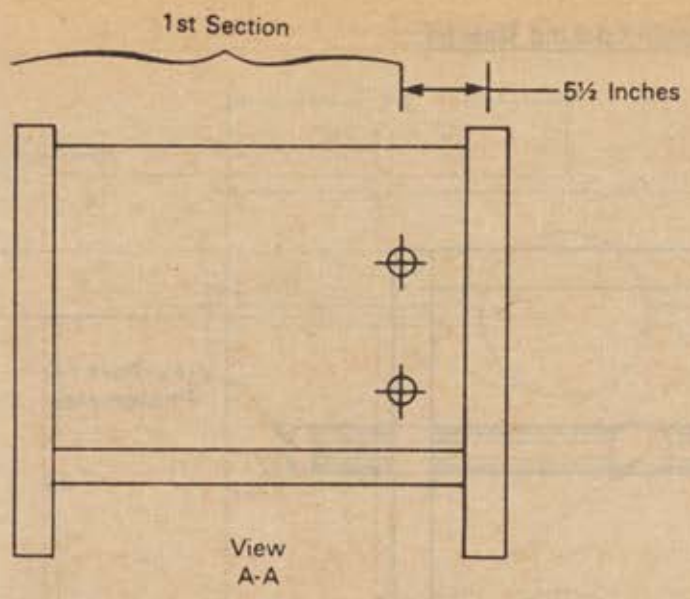

Figure 34. Side View Detail of Periscope Installation

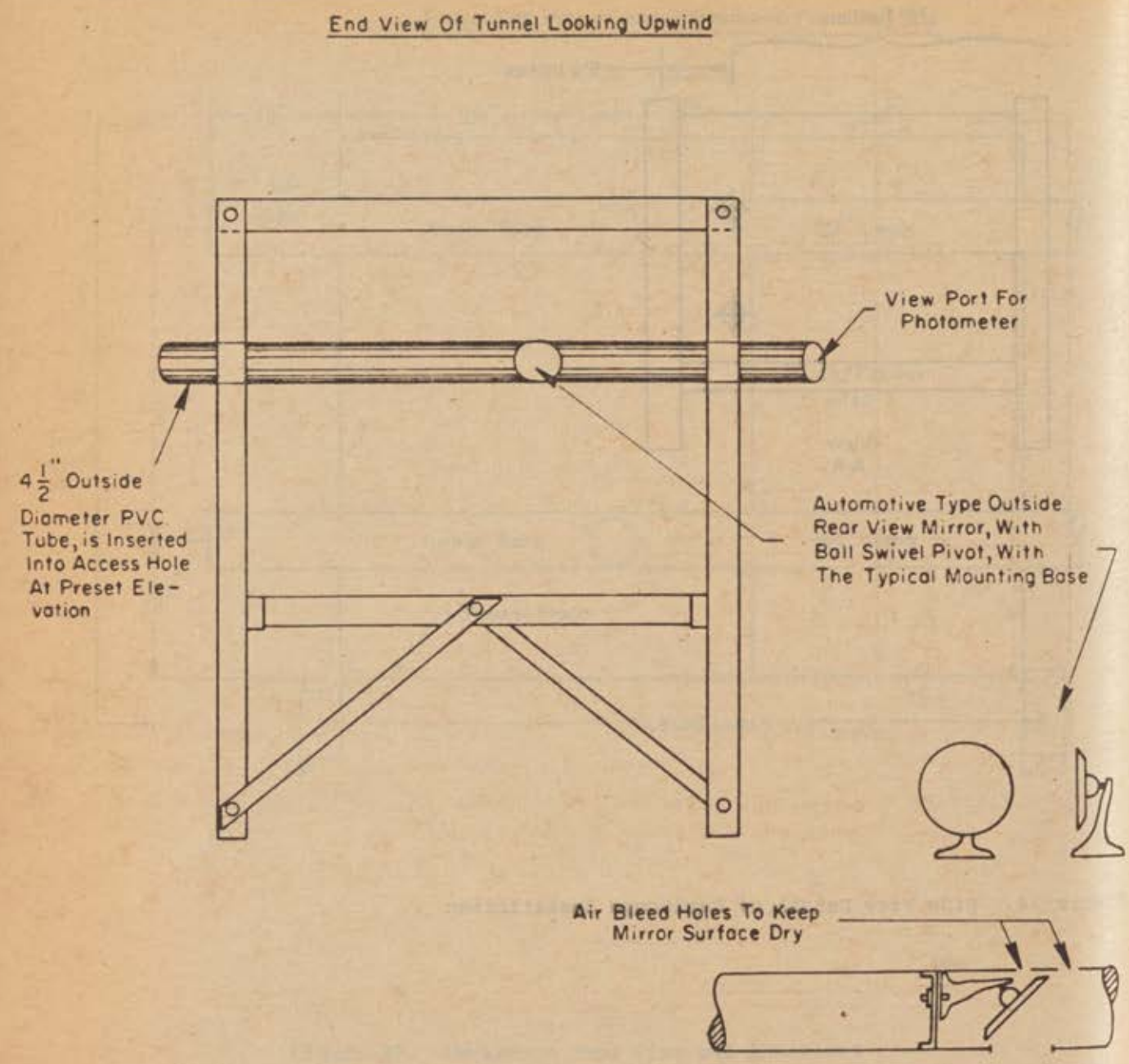

Figure 35. Periscope View Port for Photometer Readings

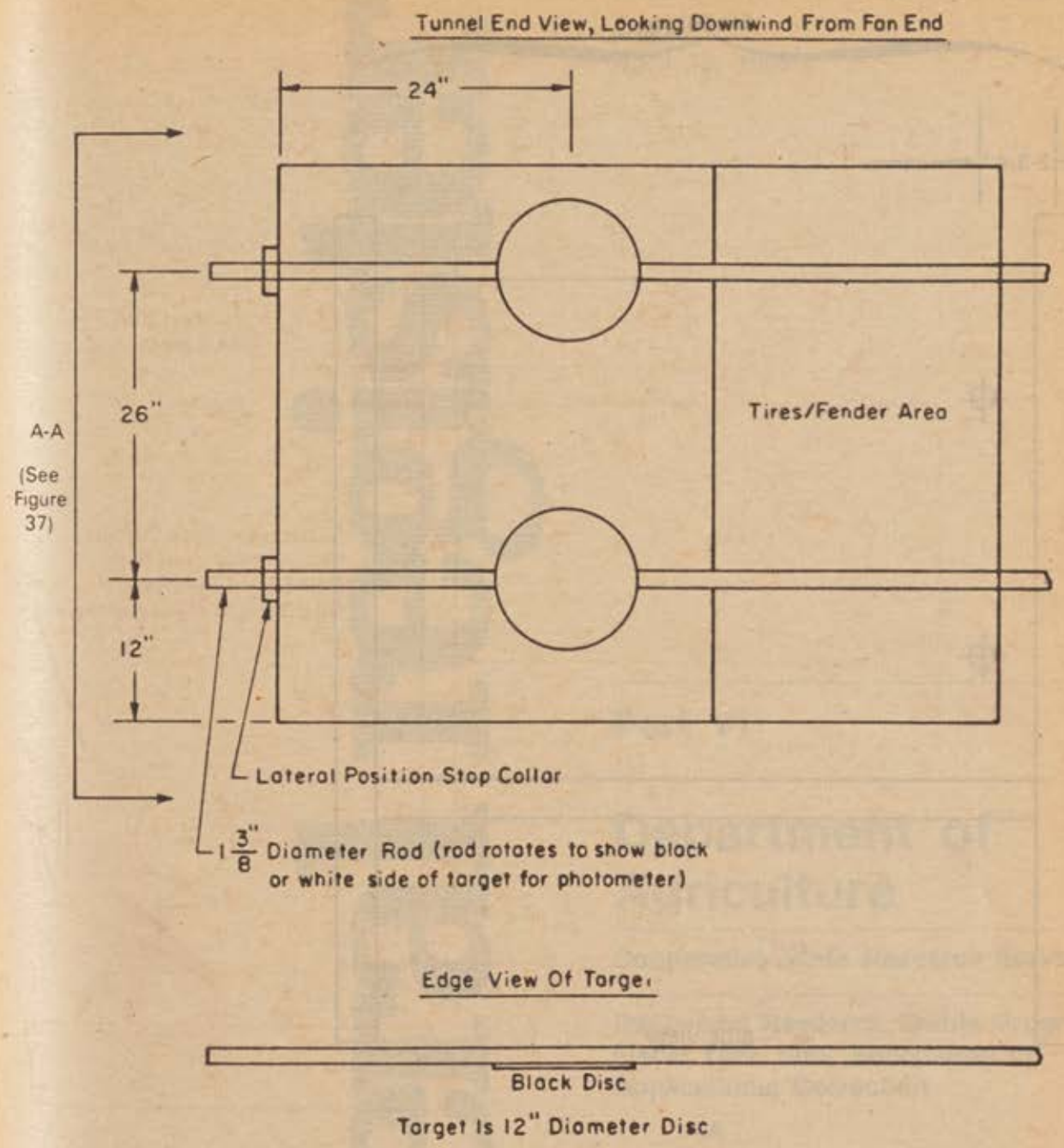

Figure 36. Photometer Target Locations

BILLING CODE 4910-59-C

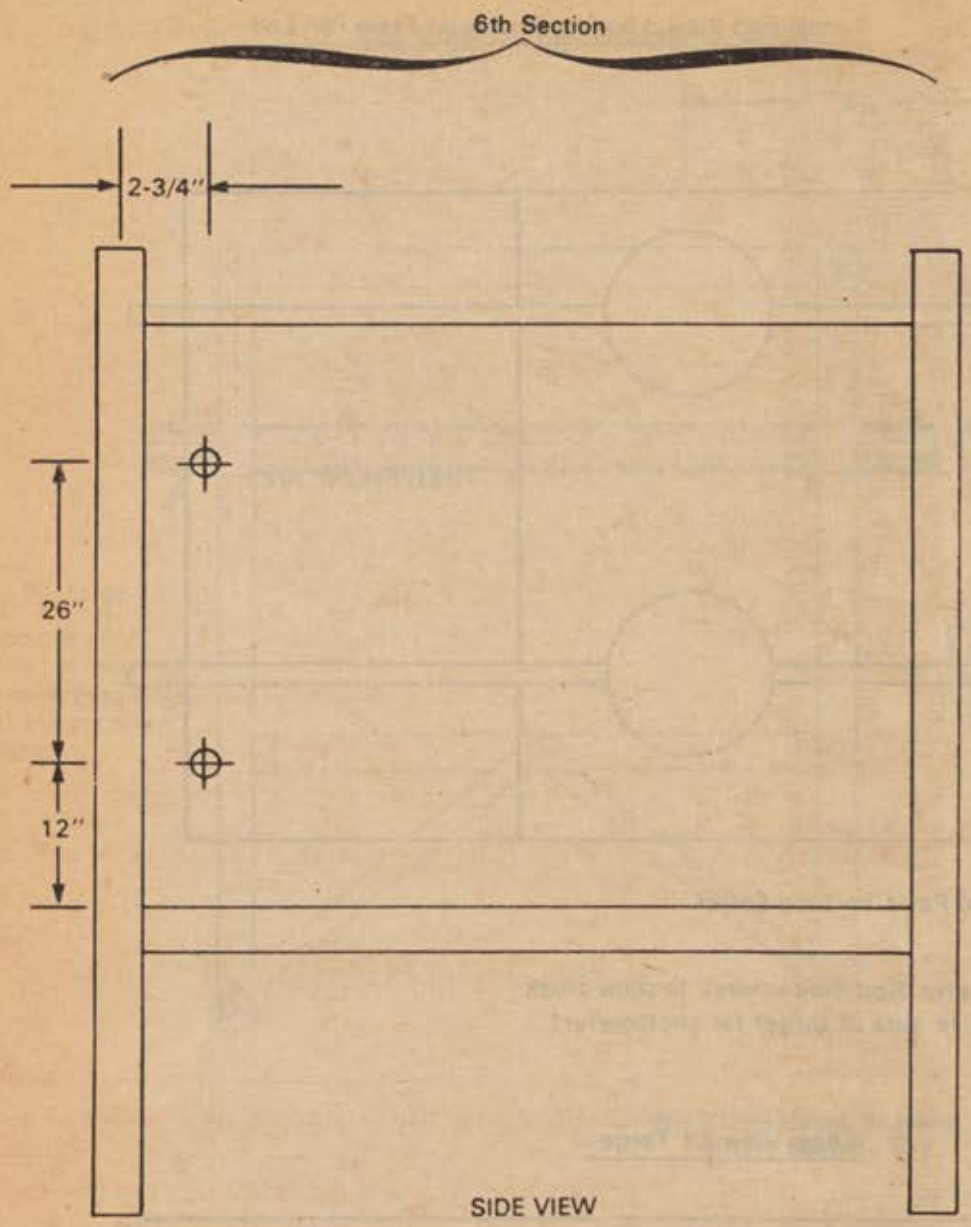

A-A

Figure 37. Viewing Target Location

Issued on April 8, 1985.

Barry Felric,

Associate Administrator for Rulemaking.

[FR Doc. 85-8652 Filed 4-9-85; 1:42 pm]

BILLING CODE 4910-59-M

federal register

Friday
April 12, 1985

Part VI

Department of Agriculture

Cooperative State Research Service

Rangeland Research Grants Program for Fiscal Year 1985, Solicitation of Applications; Correction

DEPARTMENT OF AGRICULTURE

Cooperative State Research Service

Rangeland Research Grants Program for Fiscal Year 1985; Solicitation of Applications; Correction

SUMMARY: This document corrects a notice of solicitation for Rangeland Research grant applications that appeared at page 12737 in the **Federal Register** of Friday, March 29, 1985, (50 FR 12737). The action is necessary to correct the provisions relating to indirect costs.

The following correction is made in FR Doc. 85-7581 appearing on page 12737 in the issue of March 29, 1985:

On page 12737, column one, the third full paragraph is corrected to include, after the second sentence, the following statement: "Notwithstanding any provision of these adopted regulations, indirect costs and tuition remission costs are not allowable costs for purposes of this program pursuant to Sec. 1473, Pub. L. 95-113, 91 Stat. 981 (7 U.S.C. 3319)."

Done at Washington, D.C., this 9th day of April 1985.

J. Patrick Jordan,

Administrator, Cooperative State Research Service.

[FR Doc. 85-8881 Filed 4-11-85; 8:45 am]

BILLING CODE 3410-22-M

federal register

Friday
April 12, 1985

Part VII

Office of Management and Budget

Issuance of Attachment 2 and Other Revisions to OMB Circular A-125, "Prompt Payment"; Notice

OFFICE OF MANAGEMENT AND BUDGET

Issuance of Attachment 2 and Other Revisions to OMB Circular A-125, "Prompt Payment"

AGENCY: Office of Management and Budget.

ACTION: Final issuance of Attachment 2 to OMB Circular A-125, "Prompt Payment," and other revisions to circular

SUMMARY: This notice revises OMB Circular A-125, "Prompt Payment," originally published on August 19, 1982. The notice adds an Attachment 2 to the basic circular providing additional guidance to Federal agencies on the proper timing of payments to contractors. It also revises the definition of meat in the basic circular to include poultry and eggs, pursuant to the Supplemental Appropriations Act of 1984, Pub. L. 98-181, and revises reporting requirements.

Following enactment of the Prompt Payment Act, Pub. L. 97-177, OMB issued Circular A-125, "Prompt Payment." The circular and an attachment to it issued on July 10, 1984, provide that payments will be made when due, generally 30 days after acceptance of goods and services.

The *Federal Acquisition Regulations* (FAR) permit agencies in certain instances to make payments to vendors based upon vendor assurance that goods have been shipped, rather than waiting for goods to be received and accepted. These "fast pay" procedures are necessary in unusual circumstances, but they should not be used for deliveries to depot stocks nor in other instances where receipt and acceptance are routine.

Experience has shown that payments made without evidence of receipt are more subject to error than those made after the goods are received, inspected, and accepted. A recent Inspector General report disclosed that millions of dollars of material purchased and paid for by the Federal Government under "fast pay" procedures was not received. The auditors attributed these discrepancies to inadequate internal control over the award and administration of "fast pay" contracts. Attachment 2 to Circular A-125 limits the use of "fast pay" procedures.

The Supplemental Appropriations Act of 1984, provides that the terms "meat" and "meat food products" as used in the Prompt Payment Act, shall include edible fresh or frozen poultry meat, perishable poultry meat food products, fresh eggs and perishable egg products. This notice revises Circular A-125 to include the provisions of the Act.

This notice also revises the standard for reporting early payments to include all payments made more than three days before the due date.

EFFECTIVE DATE: These revisions to Circular A-125 are effective immediately.

FOR FURTHER INFORMATION CONTACT: Financial Management Division, Office of Management and Budget, New Executive Office Building, 726 Jackson Place, NW., Washington, D.C. 20503, (202) 395-3993.

SUPPLEMENTARY INFORMATION: Relating to Attachment 2: Notice of the proposed attachment was published for comment in the **Federal Register** on December 7, 1984, (49 FR 47944). In response, OMB received 12 comments from Federal agencies, contractors, and a trade association. Most of the comments suggested clarifications to the language of the proposed attachment.

The proposed attachment has been revised. Following is a summary of the major comments grouped by subject and a response to each.

Reference to Receiving and Disbursing Activity Locations

Comment: The terms "remote location" and "adequate communication facilities," which were used in the proposed attachment to describe receiving activities, should be clarified.

Response: The language in paragraph 3 now refers to the "geographical separation" between receiving and disbursing activities which, when coupled with a lack of adequate communication facilities, makes it impracticable to process evidence of receipt in a timely manner.

Each department and agency should decide on the adequacy of its communication facilities. However, facilities served by networks such as FTS, Autovon, Autodin, and Defense Data Network should generally be considered to have adequate communication facilities for the purpose of complying with this circular.

Exceptions to $25,000 Limitation

Comment: The attachment should recognize the FAR exception to the $25,000 upper limit on payments made without evidence of receipt. The exception permits this for higher amounts where approved by an agency head.

Response: Paragraph 3a has been amended to permit exceptions to the $25,000 upper limit where approved by the head of the executive agency.

Applicability of Paragraph 3

Comment: Must all of the factors listed in paragraph 3 be present before payment without evidence of receipt is authorized, or can each individual factor listed be a basis?

Response: Paragraph 3 has been clarified to require that all four cited conditions must be met.

Darrell Johnson,

Acting Deputy Associate, Director for Administration.

Circular No. A-125, Transmittal Memorandum

March 29, 1985.

To: The Heads of Executive Departments and Establishments

Subject: Prompt Payment

This Transmittal Memorandum revises the definition of meat in OMB Circular No. A-125, "Prompt Payment," to include poultry, poultry products, eggs, and egg products as required by the Supplemental Appropriations Act of 1984 (Public Law 98-181). It renames the attachment of July 10, 1984, as Attachment 1, revises the standard for reporting early payments, and adds a new Attachment 2, entitled "Prompt Payment Standards."

David A. Stockman,

Director.

Revision to Paragraph 7, OMB Circular A-125

Paragraph 7, OMB Circular A-125 is revised to replace the third subparagraph as follows:

"—Payment for meat or meat food products, as defined in Section 2(a)(3) of the Packers and Stockyards Act of 1921 (7 U.S.C. 182 (3)), and as further defined in the Supplemental Appropriations Act of 1984 (Public Law 98-181), will be made as close as possible to, but not later than, the seventh day after the date of delivery."

Revision to Paragraph 11, OMB Circular A-125

Paragraph 11, OMB Circular A-125 is revised to replace the fourth subparagraph as follows:

"—Number, total amount, and relative frequency, on a percentage basis, of payments made 3 days or more before the due date, except where cash discounts are taken."

Revision to July 10, 1984, Attachment to OMB Circular A-125

The attachment of July 10, 1984, to OMB Circular A-125 is renamed as Attachment 1.

Attachment 2 to Circular A-125

Subject: Prompt Payment Standards

1. This attachment establishes standards for payment procedures to be used in certain circumstances where the general provisions in paragraph 6, "Payment Standards," of the basic Circular may be difficult to apply.

2. In limited situations payment may be made without evidence that supplies have been received. Instead, a vendor certification that supplies have been shipped may be used as a basis for authorizing payment.

3. These payment procedures may be employed only when all of the following conditions are present:

a. Individual orders do not exceed $25,000 (except that heads of executive agencies may permit a higher limit on a case-by-case basis).

b. Deliveries of supplies are to occur where there is both a geographical separation and a lack of adequate communications facilities between Government receiving and disbursing activities, that make it impracticable to make timely payments based on evidence of Federal acceptance.

c. Title to the supplies will vest in the Government (1) upon delivery to a post office or common carrier for mailing or shipment to destination, or (2) upon receipt by the Government if the shipment is by means other than Postal Service or common carrier.

d. The supplier agrees to replace, repair, or correct supplies not received at destination, damaged in transit, or not conforming to purchase requirements.

4. Agencies shall promptly inspect and accept supplies acquired under these procedures and shall ensure that receiving reports and payment documents are matched, and steps are taken to correct discrepancies.

5. Agencies shall ensure that specific internal controls are in place to assure that supplies paid for are received.

[FR Doc. 85-8946 Filed 4-11-85; 8:45 am]

BILLING CODE 3110-01-M

Reader Aids

Federal Register

Vol. 50, No. 71

Friday, April 12, 1985

INFORMATION AND ASSISTANCE

SUBSCRIPTIONS AND ORDERS

Subscriptions (public)	202-783-3238
Problems with subscriptions	275-3054
Subscriptions (Federal agencies)	523-5240
Single copies, back copies of FR	783-3238
Magnetic tapes of FR, CFR volumes	275-2867
Public laws (Slip laws)	275-3030

PUBLICATIONS AND SERVICES

Daily Federal Register

General information, index, and finding aids	523-5227
Public inspection desk	523-5215
Corrections	523-5237
Document drafting information	523-5237
Legal staff	523-4534
Machine readable documents, specifications	523-3408

Code of Federal Regulations

General information, index, and finding aids	523-5227
Printing schedules and pricing information	523-3419

Laws

Indexes	523-5282
Law numbers and dates	523-5282
	523-5266

Presidential Documents

Executive orders and proclamations	523-5230
Public Papers of the President	523-5230
Weekly Compilation of Presidential Documents	523-5230

United States Government Manual	523-5230

Other Services

Library	523-4986
Privacy Act Compilation	523-4534
TDD for the deaf	523-5229

FEDERAL REGISTER PAGES AND DATES, APRIL

CFR PARTS AFFECTED DURING APRIL

At the end of each month, the Office of the Federal Register publishes separately a List of CFR Sections Affected (LSA), which lists parts and sections affected by documents published since the revision date of each title.

LIST OF PUBLIC LAWS

Note: No public bills which have become law were received by the Office of the Federal Register for inclusion in today's **List of Public Laws.**

Last List April 9, 1985

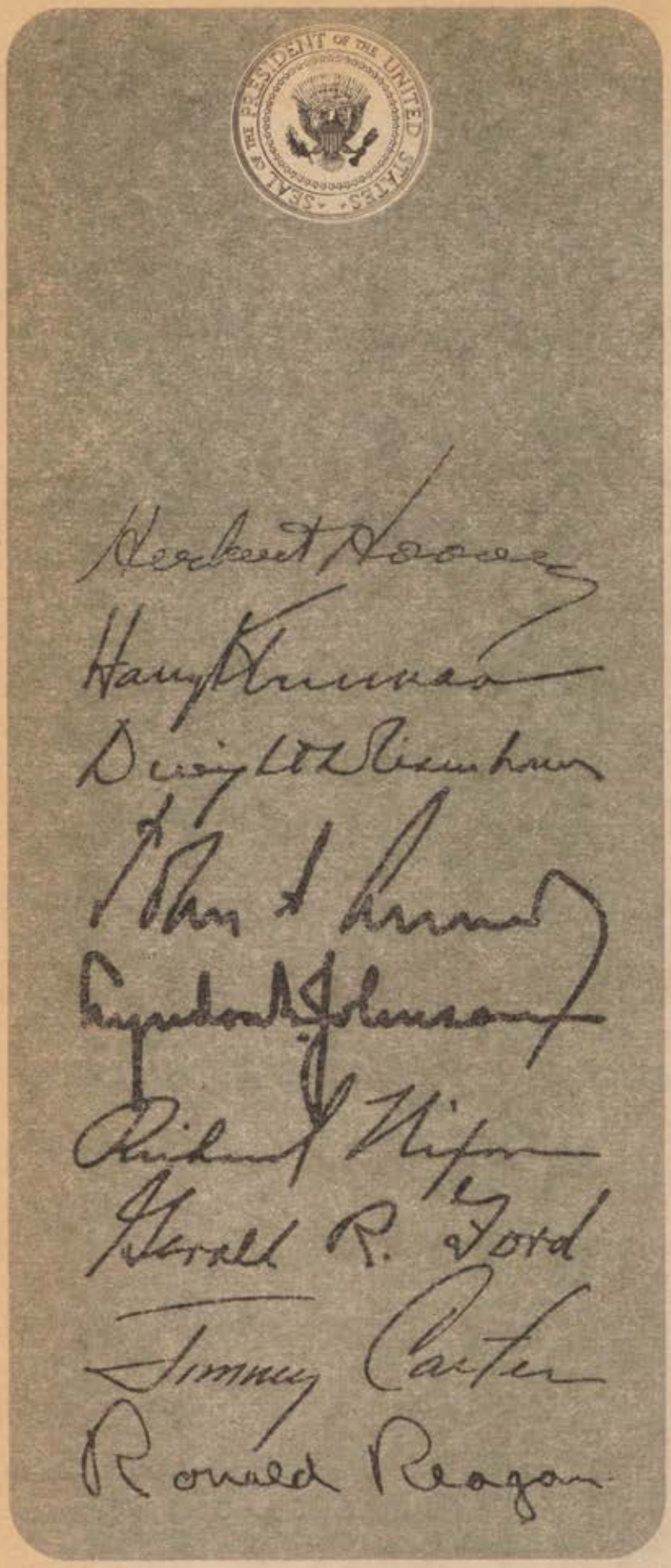

Public Papers of the Presidents of the United States

Annual volumes containing the public messages and statements, news conferences, and other selected papers released by the White House.

Volumes for the following years are available:

Herbert Hoover

1929	$19.00
1930	$19.00
1931	$20.00
1932–33	$24.00
Proclamations & Executive Orders-March 4, 1929 to March 4, 1933 2 Volume set	$32.00

Harry Truman

1945	Out of print
1946	Out of print
1947	$17.00
1948	$22.00
1949	$18.00
1950	$19.00
1951	$20.00
1952–53	$24.00

Dwight D. Eisenhower

1953	Out of print
1954	$23.00
1955	$20.00
1956	$23.00
1957	$20.00
1958	$20.00
1959	$21.00
1960–61	Out of print

John Kennedy

1961	Out of print
1962	Out of print
1963	Out of print

Lyndon B. Johnson

1963–64 (Book I)	$21.00
1963–64 (Book II)	Out of print
1965 (Book I)	Out of print
1965 (Book II)	$18.00
1966 (Book I)	Out of print
1966 (Book II)	$20.00
1967 (Book I)	$19.00
1967 (Book II)	Out of print
1968–69 (Book I)	$20.00
1968–69 (Book II)	$19.00

Richard Nixon

1969	$23.00
1970	Out of print
1971	Out of print
1972	$24.00
1973	Out of print
1974	$18.00

Gerald R. Ford

1974	$19.00
1975 (Book I)	$22.00
1975 (Book II)	$22.00
1976–77 (Book I)	$23.00
1976–77 (Book II)	$22.00
1976–77 (Book III)	$22.00

Jimmy Carter

1977 (Book I)	$23.00
1977 (Book II)	$22.00
1978 (Book I)	$24.00
1978 (Book II)	$25.00
1979 (Book I)	$24.00
1979 (Book II)	$24.00
1980–81 (Book I)	$21.00
1980–81 (Book II)	$22.00
1980–81 (Book III)	$24.00

Ronald Reagan

1981	$25.00
1982 (Book I)	$19.00
1982 (Book II)	$25.00
1983 (Book I)	$31.00

Published by the Office of the Federal Register, National Archives and Records Administration

Order from Superintendent of Documents, U.S. Government Printing Office, Washington, D.C. 20402